DESIGN NOTES
■ CONCRETE DESIGNED IN ACCORDANCE WITH L.A.D.W.P. SPEC. P178-R8, ACI 318, AND ASTM C857, USING 5,500 PSI COMPRESSIVE STRENGTH CONCRETE AT 28 DAYS AND 60,000 PSI YIELD STRENGTH ASTM A-706 STEEL REINFORCEMENT PER CALC. #33363.
■ TRANSFORMER PAD DESIGNED FOR 300 PSF LIVE LOAD AND 850 PSF DEAD LOAD.
■ COVER IS DESIGNED FOR PARKWAY LOADING PER CALC. #30448.
■ CONCRETE MIX USED IN POURING THIS PRODUCT SHALL USE FLY ASH AND SIKA CNI AS AN ADMIXTURE.
■ EACH CONCRETE SECTION SHALL BE STENCILED ON THE INSIDE & OUTSIDE WITH "JENSEN", THE DESIGNATION "DWP/FA-CN" or "DWP/F-CN-SC" IF SCC MIX USED, AND THE DATE OF POUR.
■ EACH CONCRETE SECTION SHALL HAVE CAST-IN ON THE INSIDE "JENSEN", THE YEAR, AND THE DESIGNATION "FA-CN" or "F-CN-SC" IF SCC MIX USED.
■ INSTALLATION: VAULT TO BE PLACED ON A MIN. 6" COMPACTED CRUSHED ROCK 1", GRADE A or CONCRETE AGGREGATE #3, GRADE B (SSPWC, SUBSECTIONS 200-1.2 & 200-1.4), INSTALLATION AND EVEN LOAD DISTRIBUTION.
■ MINIMUM EXCAVATION SIZE: 7'-2" X 9'-2" X DEPTH REQ'D.

BILL OF MATERIALS

ITEM	UNIT QTY	QTY	PART NUMBER	DESCRIPTION	MASS (lb)
1	1	1	100012312	Vault 4884x42 Rect. Bottom Section Terminators LADWP UB721-03 R13	6930
2	1	1	100012279	Pad 7299x6 30"x48"E LADWP UB721-03 R13 GA	2464
3	1	1	100006640	DAS1-SD-3048-D2-DP-G-BD-FONT-PAGV (SC3048 PAGV)	127
4	1	4	100004450	BOLT PENTA 1/2-13 UNC 0.875 HEAD 1.25L SS	
5	1	1	100006748	NAME PLATE SS - LADWP-E	
6	1	1	100007650	NAME PLATE HARDWARE KIT	
7	1.000 ul	1.000 ul	100005749	SEALANT JOINT BUTYL RUBBER ASTM C-990 AND M198 CS-102 1IN EQUIV X14.5FT PER BOX 118FT	

100010554.idw

OPTIONAL GRADE RINGS

G0 - NONE
G1 - (1) 12" - 200124285
G2 - (2) 12" - 200124285

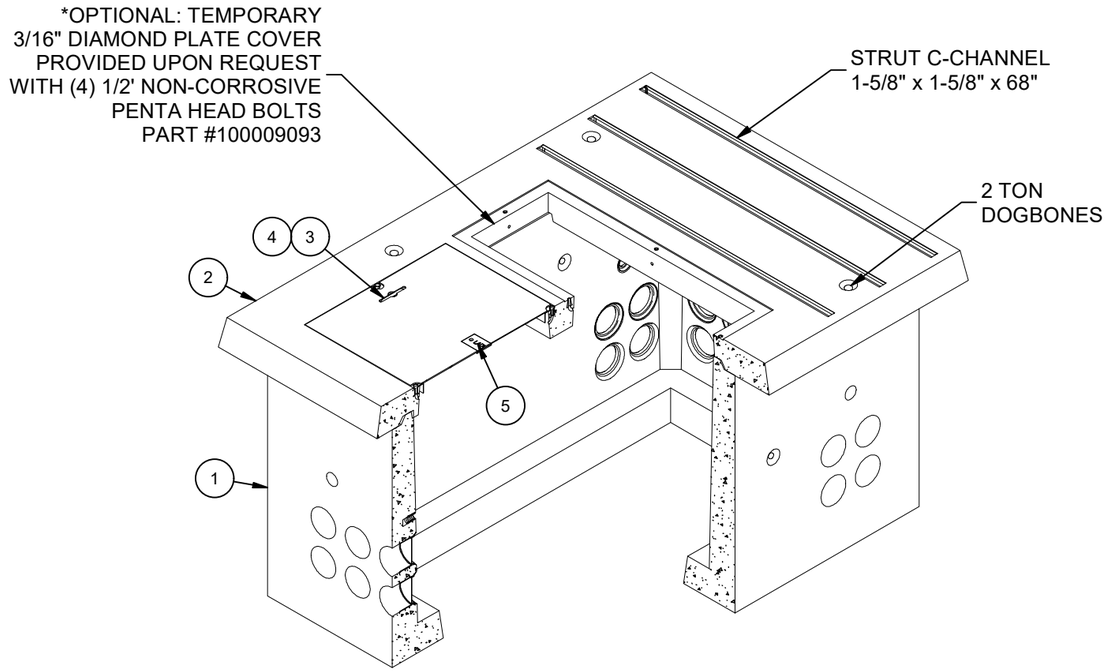

ISOMETRIC VIEW

LIFTING NOTES
■ FIELD INSTALLATION: PLANT DEMOLDING: MINIMUM HANDLING CONCRETE STRENGTH F'c = 5500 PSI RIGGING EQUALIZER REQUIRED TO EQUALIZE LOAD TO 4 LIFTING POINTS WITH A SLING ANGLE BETWEEN 60° AND 90°

REVISION HISTORY			
REV	DESCRIPTION	DATE	APPROVED
C-2-1	REVISED PER AGENCY SPEC	11/16/2026	

BURY DEPTH:	-0.4' - -0.4' to Top		
WATER LEVEL:	Below Structure	APPROX. WEIGHT:	9470.72 Lbs
DESIGN SPEC:	ACI 318,ASTM C857	LOADING SPEC:	300 psf Equipment
AGENCY:	LADWP	AGENCY SPEC:	UB721-03 R13 GA

Infrastructure
JENSEN
WWW.JENSENINFRASTRUCTURE.COM

©2026 Jensen Infrastructure - All rights reserved.
All materials appearing as Jensen Infrastructure documents and the like are proprietary work product and are protected under U.S. copyright and other laws.
Unless in conjunction with business conducted with Jensen Infrastructure, any use of Jensen Infrastructure work product without express, written consent is prohibited, and recipient is prohibited from distributing any and all work product to non-approved third parties under penalty of civil action.
This product shall only be produced in a Jensen Infrastructure facility.

DESCRIPTION: Slab Box Layout 4884x42 Terminators 30"x48"E LADWP UB721-03 R13 GA LAYOUT REVIEW			REV: C-2-1
PART NUMBER:	100010554	DRAWN BY:	P. Monroy
CREATED:	6/4/2019	MODIFIED:	11/16/2026
			SHEET: 1 OF 2

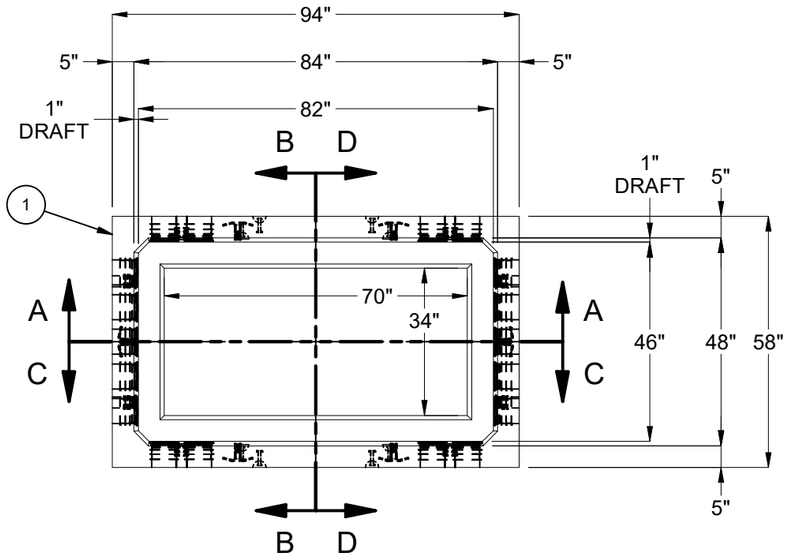

PLAN VIEW
(W/ OUT TRANSFORMER PAD)

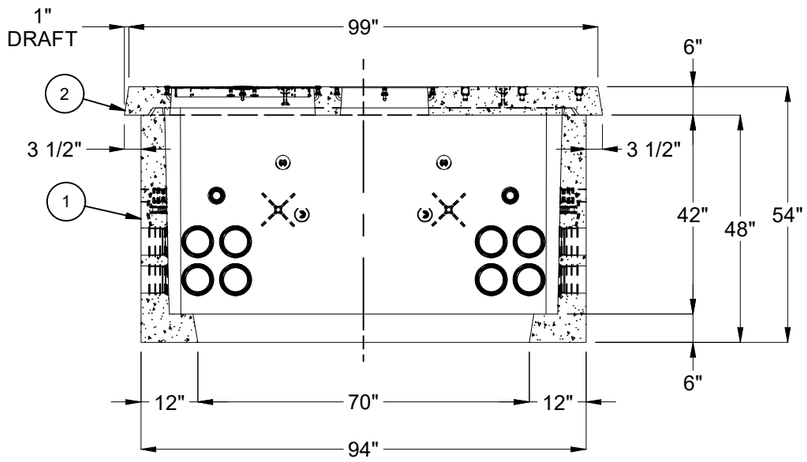

SECTION A-A

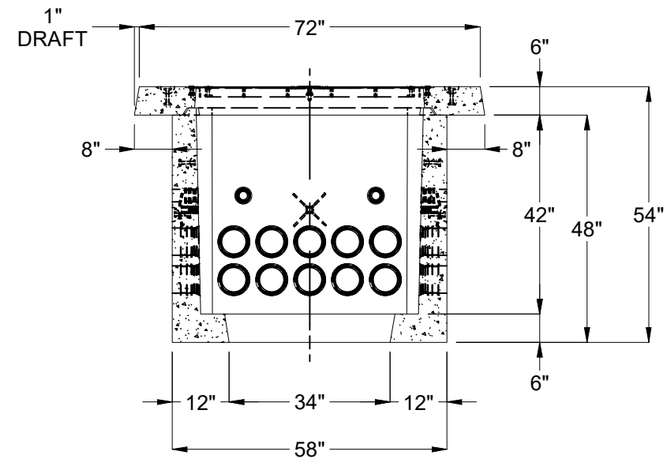

SECTION B-B

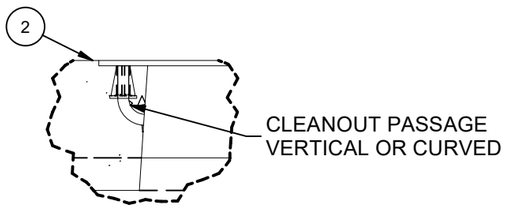

DETAIL E
(INSERTS AROUND OPENINGS)

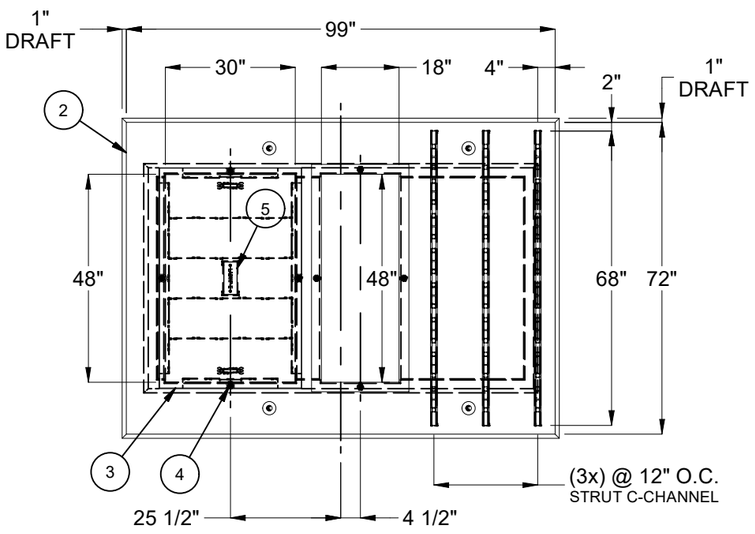

PLAN VIEW
(TRANSFORMER PAD)

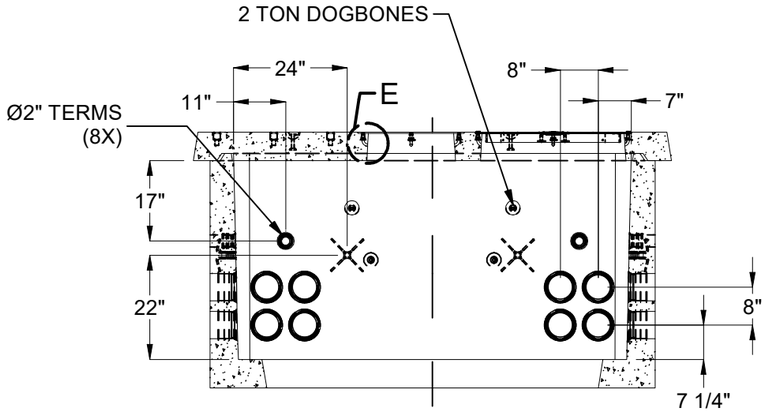

SECTION C-C

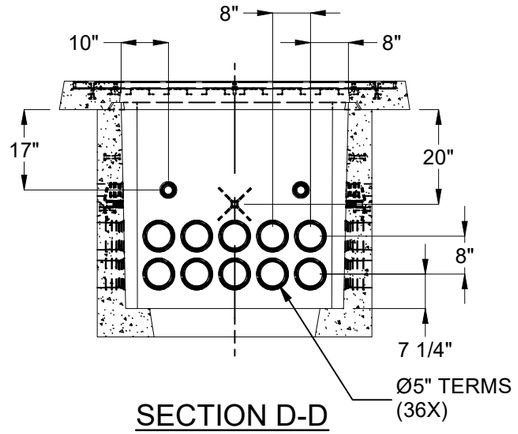

SECTION D-D

BURY DEPTH:	-0.4' - -0.4' to Top		
WATER LEVEL:	Below Structure	APPROX. WEIGHT:	9470.72 Lbs
DESIGN SPEC:	ACI 318,ASTM C857	LOADING SPEC:	300 psf Equipment
AGENCY:	LADWP	AGENCY SPEC:	UB721-03 R13 GA

Infrastructure
JENSEN
WWW.JENSENINFRASTRUCTURE.COM

©2026 Jensen Infrastructure - All rights reserved.
All materials appearing as Jensen Infrastructure documents and the like are proprietary work product and are protected under U.S. copyright and other laws.
Unless in conjunction with business conducted with Jensen Infrastructure, any use of Jensen Infrastructure work product without express, written consent is prohibited, and recipient is prohibited from distributing any and all work product to non-approved third parties under penalty of civil action.
This product shall only be produced in a Jensen Infrastructure facility.

DESCRIPTION:	Slab Box Layout 4884x42 Terminators 30"x48"E LADWP UB721-03 R13 GA LAYOUT DRAWING		REV: C-2-1
PART NUMBER:	100010554	DRAWN BY:	P. Monroy
CREATED:	6/4/2019	MODIFIED:	11/16/2026
			SHEET: 2 OF 2

100010554.idw