DESIGN NOTES
■ DESIGNED IN ACCORDANCE WITH AASHTO HS20-44 TRAFFIC BRIDGE LOADING USING 5,500 PSI COMPRESSIVE STRENGTH CONCRETE AND 60,000 PSI YIELD STRENGTH ASTM A-706 STEEL REINFORCEMENT PER CALCS. #30207.
■ TRANSFORMER PAD DESIGNED FOR 100 PSF LIVE LOAD AND 850 PSF DEAD LOAD.
■ COVER IS DESIGN FOR PARKWAY LOADING PER CALC. #30448.
■ VAULT TO BE PLACED ON A MIN. 6” BASE OF CRUSHER RUN FOR EASE OF INSTALLATION AND EVEN LOAD DISTRIBUTION.
■ EACH CONCRETE SECTION SHALL HAVE CAST-IN ON THE INSIDE "JENSEN", THE YEAR, AND THE DESIGNATION "FA-CN" or "F-CN-SC" IF SCC MIX USED.
■ ALL PARTS TO BE STENCILED: MFG DATE / JOB NUMBER / PRODUCT ID / WEIGHT.
■ MINIMUM EXCAVATION SIZE: 5'-10" X 8'-10" X DEPTH REQ'D.
■ FOR COMPLETE DESIGN AND PRODUCT INFORMATION CONTACT JENSEN PRECAST.

BILL OF MATERIALS

ITEM	UNIT QTY	QTY	PART NUMBER	DESCRIPTION	MASS (lb)
1	1	1	100012769	Vault 4884x42 Rect. Bottom Section Knockout CITY OF GLENDALE	6007
2	1	1	100012279	Pad 7299x6 30"x48"E LADWP UB721-03 R13 GA	2464
3	1	1	100006640	DAS1-SD-3048-D2-DP-G-BD-FONT-PAGV (SC3048 PAGV)	127
4	1	4	100004043	BOLT HEX 1/2-13 UNC 1.5 316SS	
5	1	1	100007301	NAME PLATE 3X7-1/2 SS - C&G ELECTRIC	
6	1	1	100007650	NAME PLATE HARDWARE KIT	
7	1.000 ul	1.000 ul	100005749	SEALANT JOINT BUTYL RUBBER ASTM C-990 AND M198 CS-102 1IN EQUIV X14.5FT PER BOX 118FT	

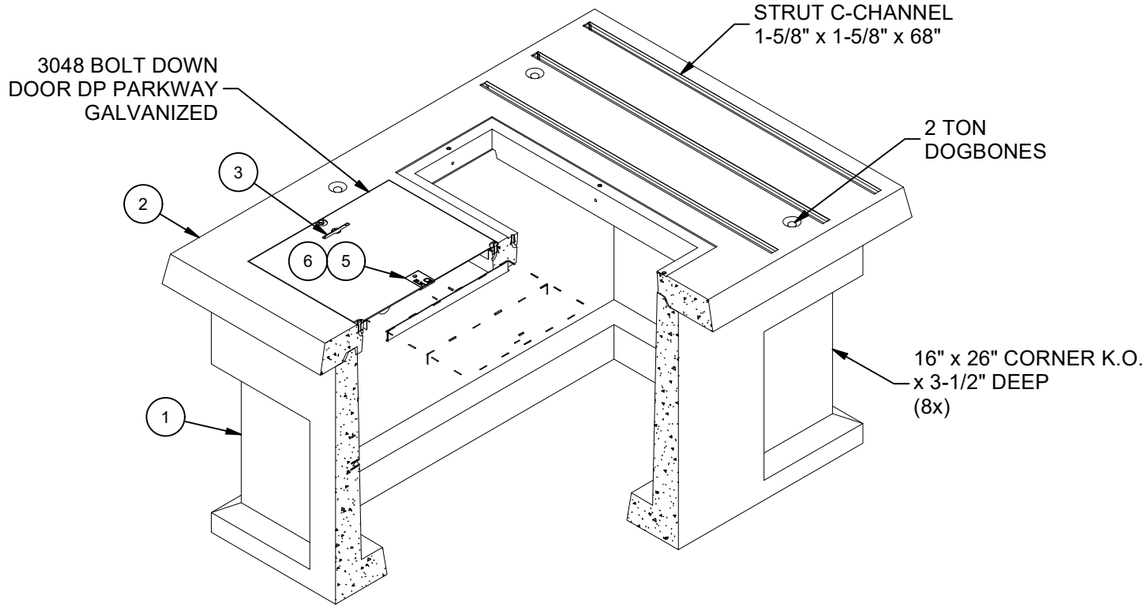

ISOMETRIC VIEW

LIFTING NOTES
■ FIELD INSTALLATION: PLANT DEMOLDING: MINIMUM HANDLING CONCRETE STRENGTH F'c = 5500 PSI RIGGING EQUALIZER REQUIRED TO EQUALIZE LOAD TO 4 LIFTING POINTS WITH A SLING ANGLE BETWEEN 60° AND 90°

BURY DEPTH:	-0.3' - 0.3' to Top		
WATER LEVEL:	3.0'	APPROX. WEIGHT:	8555.21 Lbs
DESIGN SPEC:	ACI 318,ASTM C857	LOADING SPEC:	A-16 (AASHTO HS20-44)
AGENCY:	Glendale CA	AGENCY SPEC:	S-1403-01

JENSEN PRECAST EST. 1968

WWW.JENSENPRECAST.COM

©2024 Jensen Precast- All rights reserved.
All materials appearing as Jensen Precast documents and the like are proprietary work product and are protected under U.S. copyright and other laws.
Unless in conjunction with business conducted with Jensen Precast, any use of Jensen Precast work product without express, written consent is prohibited, and recipient is prohibited from distributing any and all work product to non-approved third parties under penalty of civil action.

REVISION HISTORY			
REV	DESCRIPTION	DATE	APPROVED
B-1	RELEASE IN INVENTOR	6/28/2024	

DESCRIPTION:	Slab Box Layout 4884x42 Knockout 30"x48"E Glendale CA S-1403-01 LAYOUT REVIEW		REV: B-1
PART NUMBER:	100010552	DRAWN BY:	J. Prado
CREATED:	6/5/2019	MODIFIED:	6/28/2024
			SHEET: 1 OF 2

100010552.idw

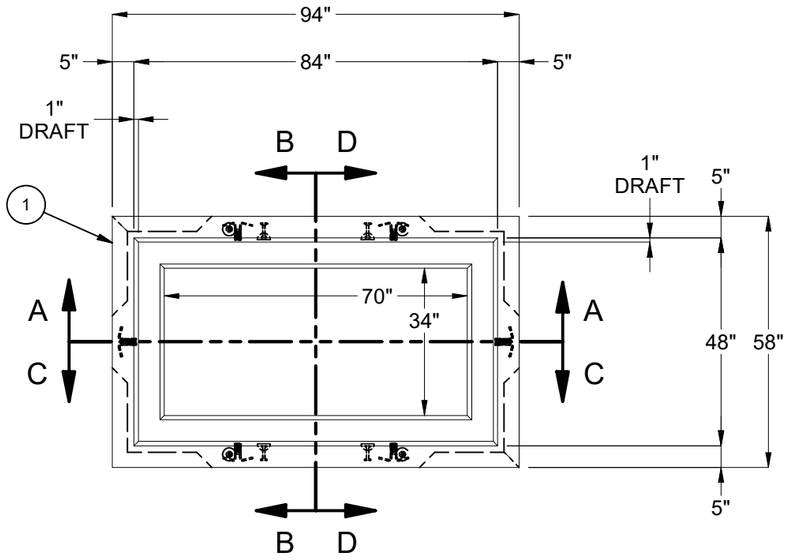

PLAN VIEW
(W/ OUT TRANSFORMER PAD)

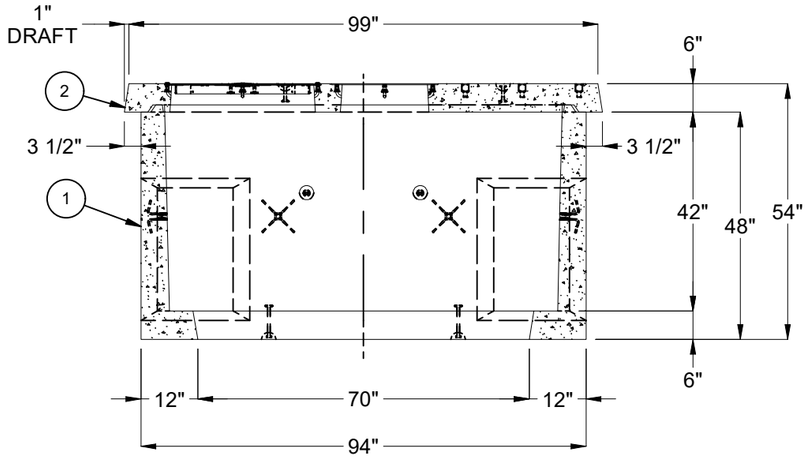

SECTION A-A

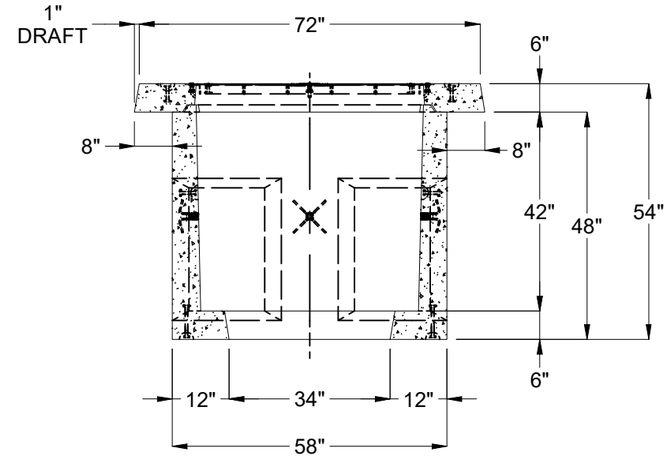

SECTION B-B

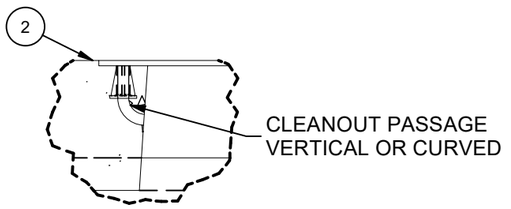

DETAIL E
(INSERTS AROUND OPENINGS)

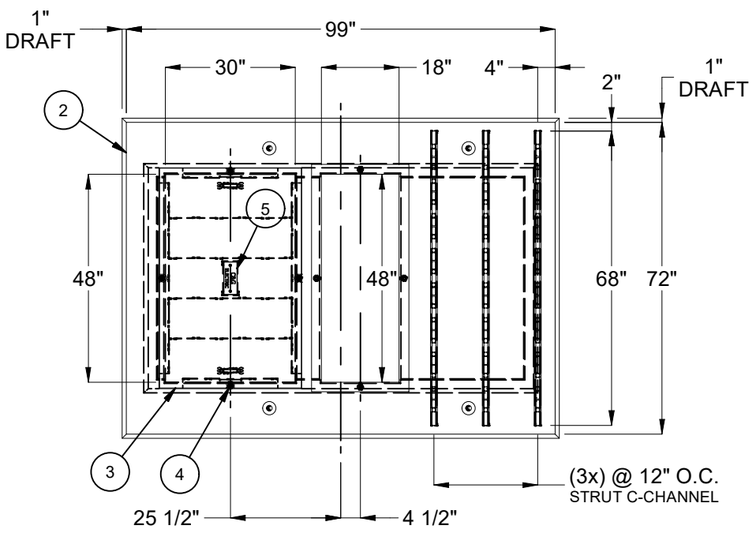

PLAN VIEW
(TRANSFORMER PAD)

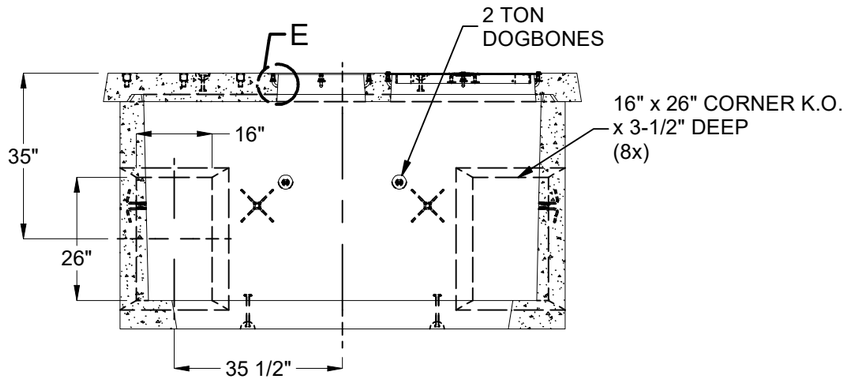

SECTION C-C

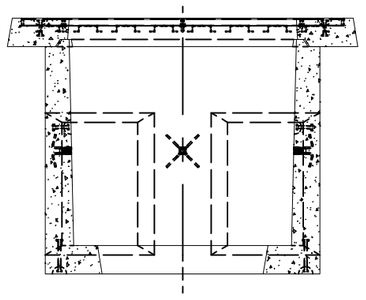

SECTION D-D

BURY DEPTH:	-0.3' - 0.3' to Top		
WATER LEVEL:	3.0'	APPROX. WEIGHT:	8555.21 Lbs
DESIGN SPEC:	ACI 318,ASTM C857	LOADING SPEC:	A-16 (AASHTO HS20-44)
AGENCY:	Glendale CA	AGENCY SPEC:	S-1403-01

JENSEN PRECAST EST. 1968

WWW.JENSENPRECAST.COM

©2024 Jensen Precast- All rights reserved.
All materials appearing as Jensen Precast documents and the like are proprietary work product and are protected under U.S. copyright and other laws.
Unless in conjunction with business conducted with Jensen Precast, any use of Jensen Precast work product without express, written consent is prohibited, and recipient is prohibited from distributing any and all work product to non-approved third parties under penalty of civil action.

DESCRIPTION:	Slab Box Layout 4884x42 Knockout 30"x48"E Glendale CA S-1403-01 LAYOUT DRAWING		REV: B-1
PART NUMBER:	100010552	DRAWN BY:	J. Prado
CREATED:	6/5/2019	MODIFIED:	6/28/2024
			SHEET: 2 OF 2

100010552.idw