| DESIGN NOTES |
|---|
| ■ DESIGNED IN ACCORDANCE WITH AASHTO HS20-44 TRAFFIC BRIDGE LOADING USING 5,500 PSI COMPRESSIVE STRENGTH CONCRETE AND 60,000 PSI YIELD STRENGTH ASTM A-706 STEEL REINFORCEMENT PER CALCS. #30207. |
| ■ TRANSFORMER PAD DESIGNED FOR 100 PSF LIVE LOAD AND 850 PSF DEAD LOAD. |
| ■ COVER DESIGNED FOR 300 PSF, OR 600 lb LOAD ON 5.5" x 5.5" FOOTPRINT RESTRICTED TO AREAS OF PEDESTRIAN USE AND LIGHT MAINTENANCE VEHICLES USE, AND OTHER AREAS THAT ARE INACCESSIBLE TO ALL OTHER VEHICLE TRAFFIC. |
| ■ VAULT TO BE PLACED ON A MIN. 6” BASE OF CRUSHER RUN FOR EASE OF INSTALLATION AND EVEN LOAD DISTRIBUTION. |
| ■ MINIMUM EXCAVATION SIZE: 7'-2" X 9'-2" X DEPTH REQ'D. |
| ■ ALL PARTS TO BE STENCILED: MFG DATE / JOB NUMBER / PRODUCT ID / WEIGHT. |
| ■ FOR COMPLETE DESIGN AND PRODUCT INFORMATION CONTACT JENSEN PRECAST. |

## BILL OF MATERIALS

| ITEM | UNIT QTY | QTY | PART NUMBER | DESCRIPTION | MASS (lb) |
|---|---|---|---|---|---|
| 1 | 1 | 1 | 100012313 | Vault 4884x42 Rect. Bottom Section Thinwall ED/AN/RP/AZ UGS SS530, SB-2 | 6265 |
| 2 | 1 | 1 | 100012280 | Pad 7296x6 30"x48"E Anaheim CU 1600-20 F1 | 2396 |
| 3 | 1 | 1 | 100006639 | DAS1-SD-3048-D2-DP-G-FONT-(SC3048-PGV) | 143 |
| 4 | 1 | 6 | 100004349 | BOLT HEX 1/2-13 UNC 2.5 304SS | |
| 5 | 1 | 1 | 100006744 | NAME PLATE SS - ELECTRIC | |
| 6 | 1 | 1 | 100007650 | NAME PLATE HARDWARE KIT | |
| 7 | 1.000 ul | 1.000 ul | 100005749 | SEALANT JOINT BUTYL RUBBER ASTM C-990 AND M198 CS-102 1IN EQUIV X14.5FT PER BOX 118FT | |

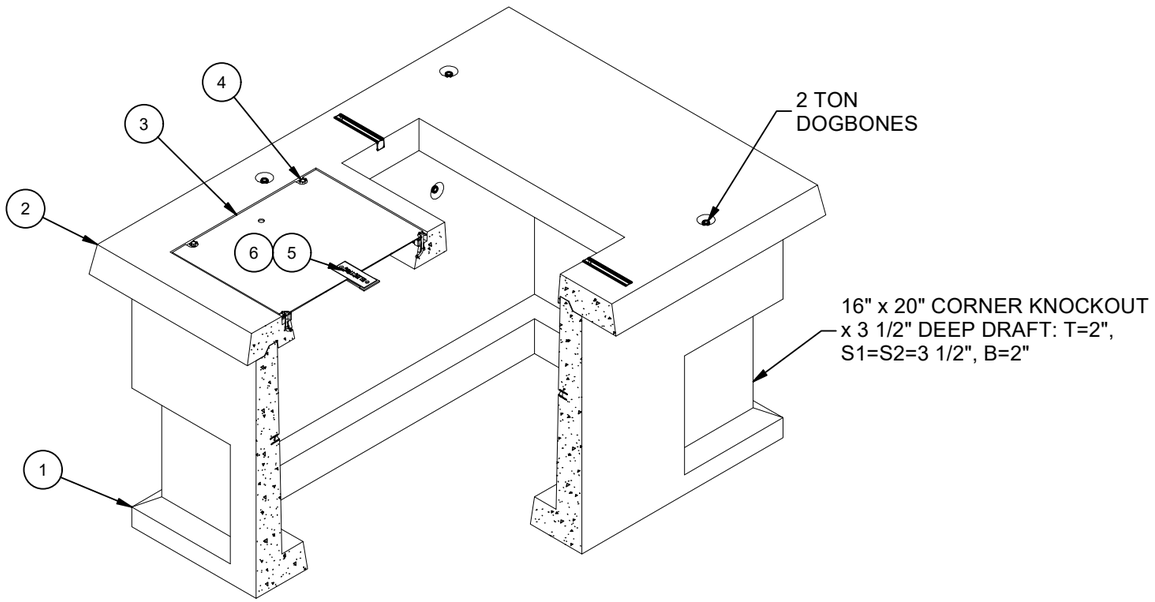


ISOMETRIC VIEW

| LIFTING NOTES |
|---|
| ■ FIELD INSTALLATION: PLANT DEMOLDING: MINIMUM HANDLING CONCRETE STRENGTH F'c = 5500 PSI RIGGING EQUALIZER REQUIRED TO EQUALIZE LOAD TO 4 LIFTING POINTS WITH A SLING ANGLE BETWEEN 60° AND 90° |

| REVISION HISTORY | | | |
|---|---|---|---|
| REV | DESCRIPTION | DATE | APPROVED |
| B-1 | INITIAL RELEASE INVENTOR | 6/6/2024 | |

| | | | |
|---|---|---|---|
| BURY DEPTH: | 0.0' - 0.0' to Top | | |
| WATER LEVEL: | 3.0' | APPROX. WEIGHT: | 8805.41 Lbs |
| DESIGN SPEC: | ACI 318,ASTM C857 | LOADING SPEC: | A-16 (AASHTO HS20-44) |
| AGENCY: | Anaheim | AGENCY SPEC: | CU 1600-20 F1 |

JENSEN PRECAST EST. 1968

WWW.JENSENPRECAST.COM

©2024 Jensen Precast- All rights reserved.
All materials appearing as Jensen Precast documents and the like are proprietary work product and are protected under U.S. copyright and other laws.
Unless in conjunction with business conducted with Jensen Precast, any use of Jensen Precast work product without express, written consent is prohibited, and recipient is prohibited from distributing any and all work product to non-approved third parties under penalty of civil action.

| | | | |
|---|---|---|---|
| DESCRIPTION: | Slab Box Layout 4884x42 Knockout 30"x48"E Anaheim CU 1600-20 F1<br>LAYOUT REVIEW | | REV: B |
| PART NUMBER: | 100010551 | DRAWN BY: | J. Prado |
| CREATED: | 9/27/2019 | MODIFIED: | 6/6/2024 |
| | | | SHEET: 1 OF 2 |

100010551.idw

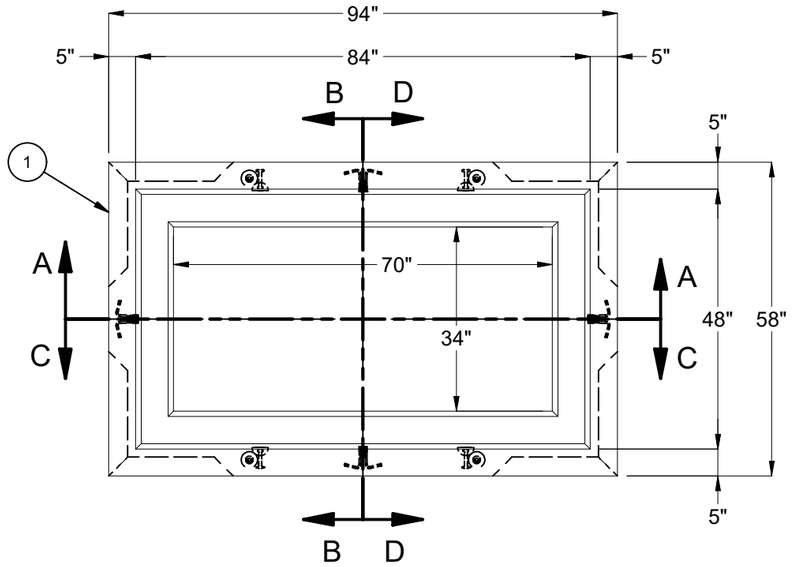


PLAN VIEW
(W/ OUT EQUIPMENT PAD)

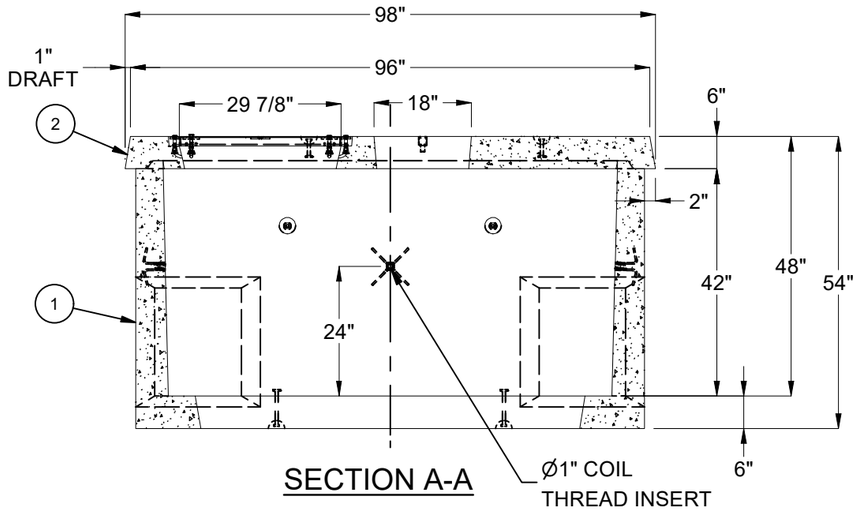


SECTION A-A

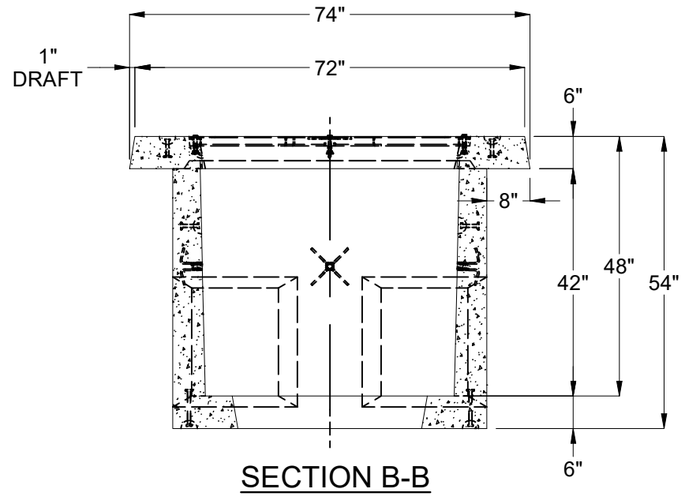


SECTION B-B

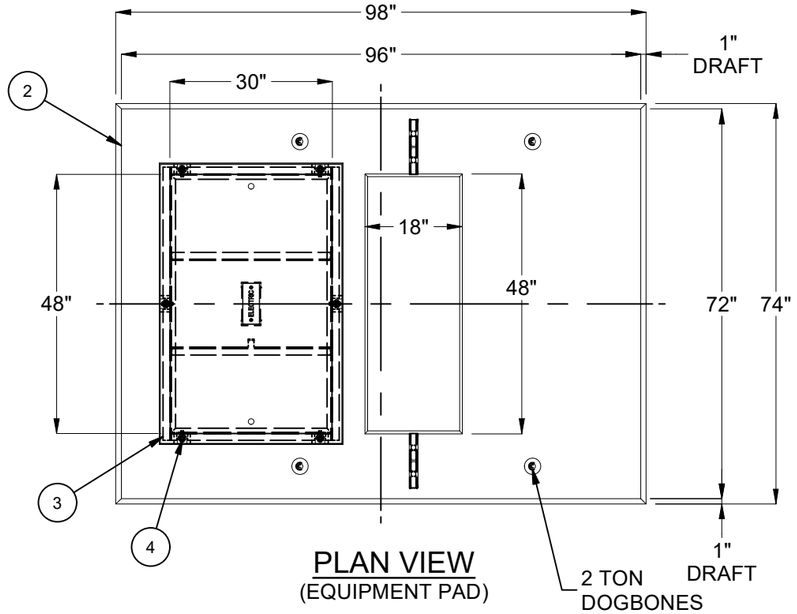


PLAN VIEW
(EQUIPMENT PAD)

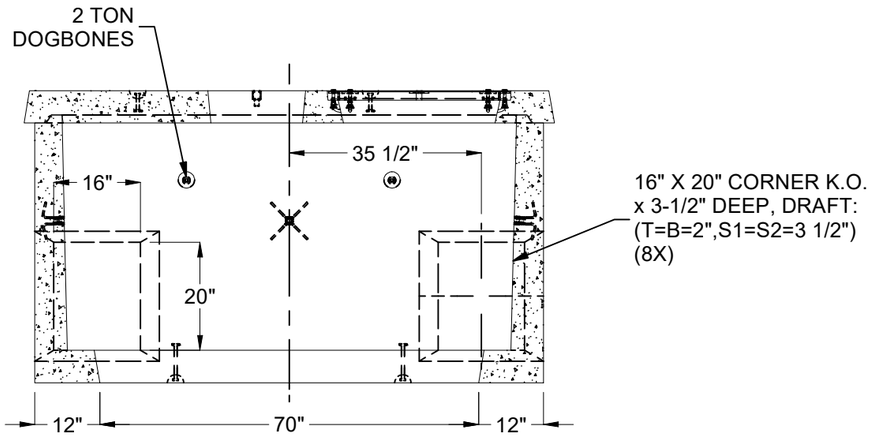


SECTION C-C

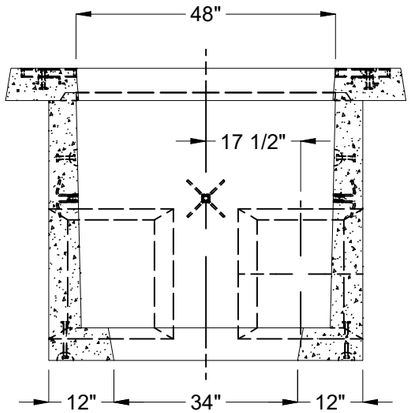


SECTION D-D

| | | | |
|---|---|---|---|
| BURY DEPTH: | 0.0' - 0.0' to Top | | |
| WATER LEVEL: | 3.0' | APPROX. WEIGHT: | 8805.41 Lbs |
| DESIGN SPEC: | ACI 318,ASTM C857 | LOADING SPEC: | A-16 (AASHTO HS20-44) |
| AGENCY: | Anaheim | AGENCY SPEC: | CU 1600-20 F1 |

JENSEN PRECAST EST. 1968

WWW.JENSENPRECAST.COM

©2024 Jensen Precast- All rights reserved.
All materials appearing as Jensen Precast documents and the like are proprietary work product and are protected under U.S. copyright and other laws.
Unless in conjunction with business conducted with Jensen Precast, any use of Jensen Precast work product without express, written consent is prohibited, and recipient is prohibited from distributing any and all work product to non-approved third parties under penalty of civil action.

| | | | |
|---|---|---|---|
| DESCRIPTION: | Slab Box Layout 4884x42 Knockout 30"x48"E Anaheim CU 1600-20 F1<br>LAYOUT DRAWING | | REV: B |
| PART NUMBER: | 100010551 | DRAWN BY: | J. Prado |
| CREATED: | 9/27/2019 | MODIFIED: | 6/6/2024 |
| | | | SHEET: 2 OF 2 |

100010551.idw