DESIGN NOTES
■ DESIGNED IN ACCORDANCE WITH AASHTO HS20-44 TRAFFIC BRIDGE LOADING USING 5,500 PSI COMPRESSIVE STRENGTH CONCRETE AND 60,000 PSI YIELD STRENGTH ASTM A-706 STEEL REINFORCEMENT PER CALCS. #34196.
■ COVER DESIGNED FOR 300 PSF, OR 600 lb LOAD ON 5.5" x 5.5" FOOTPRINT RESTRICTED TO AREAS OF PEDESTRIAN USE AND LIGHT MAINTENANCE VEHICLES USE, AND OTHER AREAS THAT ARE INACCESSIBLE TO ALL OTHER VEHICLE TRAFFIC.
■ MINIMUM EXCAVATION SIZE: 7'-0" X 10'-6" X DEPTH REQ'D.
■ SWITCH ENCLOSURE TO BE PLACED ON A MIN. 6" BASE OF CRUSHER RUN FOR EASE OF INSTALLATION AND EVEN LOAD DISTRIBUTION.
■ FILL SUMP CAVITY WITH ROCK TO A DEPTH OF 2ft.
■ FINISH COATING: ALL INTERIOR WALLS SHALL BE PAINTED WHITE.
■ ALL PARTS TO BE STENCILED: MFG DATE / JOB NUMBER / PRODUCT ID / WEIGHT.
■ FOR COMPLETE DESIGN AND PRODUCT INFORMATION CONTACT JENSEN PRECAST.

BILL OF MATERIALS

ITEM	UNIT QTY	QTY	PART NUMBER	DESCRIPTION	MASS (lb)
1	1	1	100009683	Vault 60102x42 Rect. Bottom Section Terminators Sump Burbank S-462G	10964
2	1	1	100009545	Riser 60102x37 Burbank S-462G	6811
3	1	1	100012730	Pad 84126x8 30"x48"E Burbank S-462G	3806
4	1	1	100007035	COVER 3048 POLYMER BURBANK ELECTRIC	190
5	1	6	100008105	PENTA BOLT 1/2-13 UNC 2-1/2 304SS W/CAPWASH	
6	2.000 gal	2.000 gal	100006420	COATING PAINT LATEX WHITE	
7	1.000 ul	1.000 ul	100005749	SEALANT JOINT BUTYL RUBBER ASTM C-990 AND M198 CS-102 1IN EQUIV X14.5FT PER BOX 118FT	

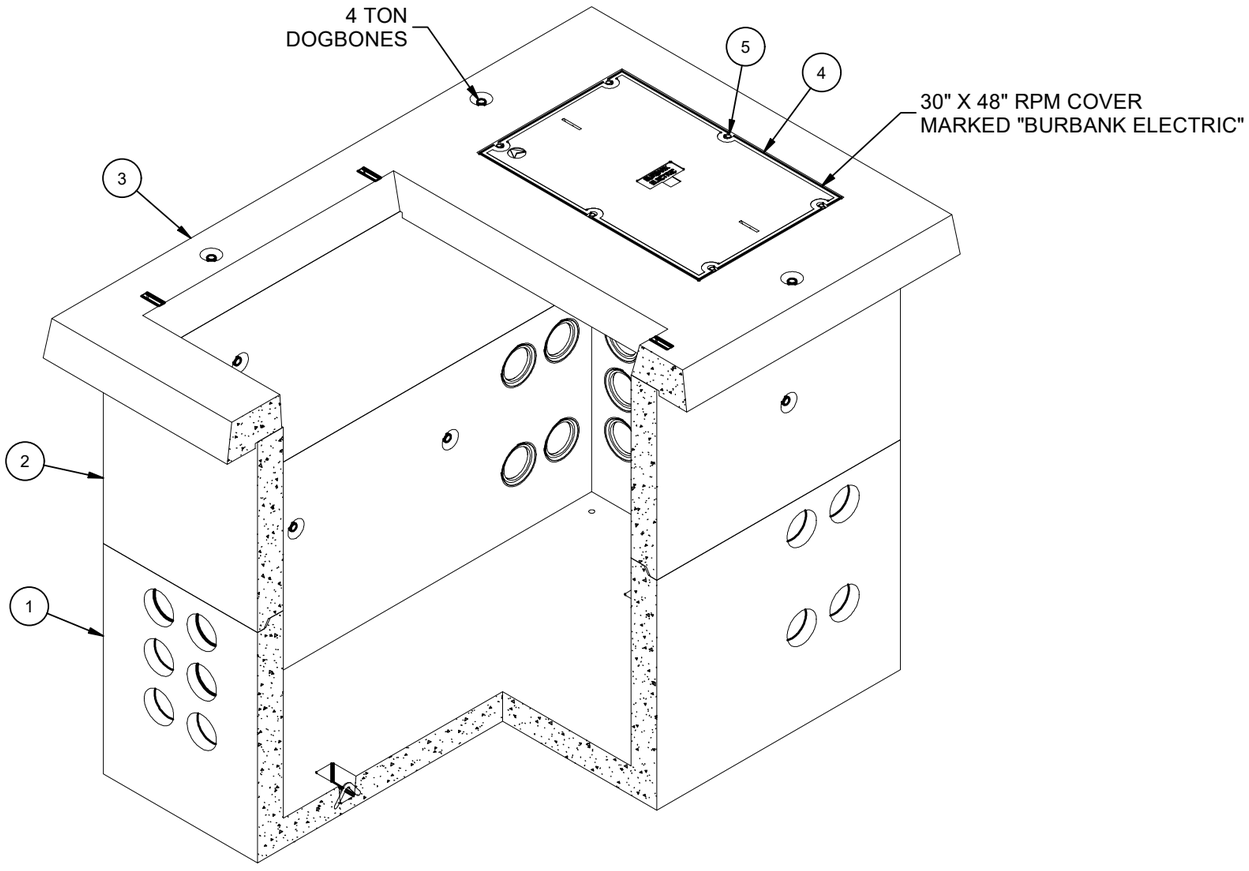

ISOMETRIC VIEW

LIFTING NOTES
■ FIELD INSTALLATION: PLANT DEMOLDING: MINIMUM HANDLING CONCRETE STRENGTH F'c = 5500 PSI RIGGING EQUALIZER REQUIRED TO EQUALIZE LOAD TO 4 LIFTING POINTS WITH A SLING ANGLE BETWEEN 60° AND 90°

REVISION HISTORY			
REV	DESCRIPTION	DATE	APPROVED
D-2	REMOVED TAG, UPDATED NOTES & REVISED DESCRIPTION	7/12/2024	

BURY DEPTH:	-0.3' - 0.3' to Top		
WATER LEVEL:	3.0'	APPROX. WEIGHT:	21772.21 Lbs
DESIGN SPEC:	ACI 318,ASTM C857	LOADING SPEC:	A-16 (AASHTO HS20-44)
AGENCY:	Burbank	AGENCY SPEC:	S-462G

JENSEN PRECAST EST. 1968

WWW.JENSENPRECAST.COM

©2024 Jensen Precast- All rights reserved.
All materials appearing as Jensen Precast documents and the like are proprietary work product and are protected under U.S. copyright and other laws.
Unless in conjunction with business conducted with Jensen Precast, any use of Jensen Precast work product without express, written consent is prohibited, and recipient is prohibited from distributing any and all work product to non-approved third parties under penalty of civil action.
This product shall only be produced in a Jensen Precast facility.

DESCRIPTION:	Slab Box Layout 60102x78 Terminators Sump 30"x48"E Burbank S-462G LAYOUT REVIEW		REV: D-3
PART NUMBER:	100010512	DRAWN BY:	J. Prado
CREATED:	3/6/2020	MODIFIED:	7/12/2024
			SHEET: 1 OF 2

100010512.idw

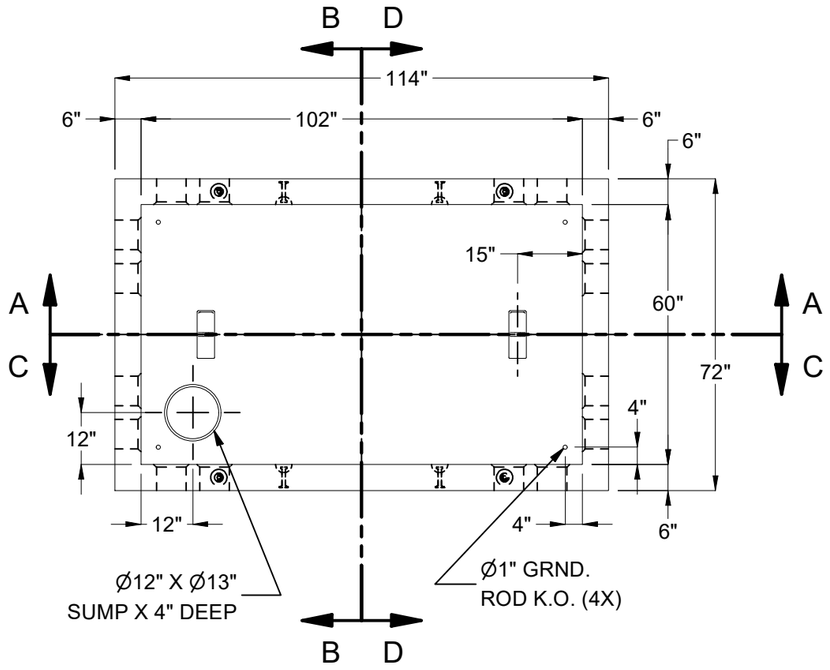

PLAN VIEW

(SHOWN W/ OUT TRANSFORMER PAD FOR CLARITY)

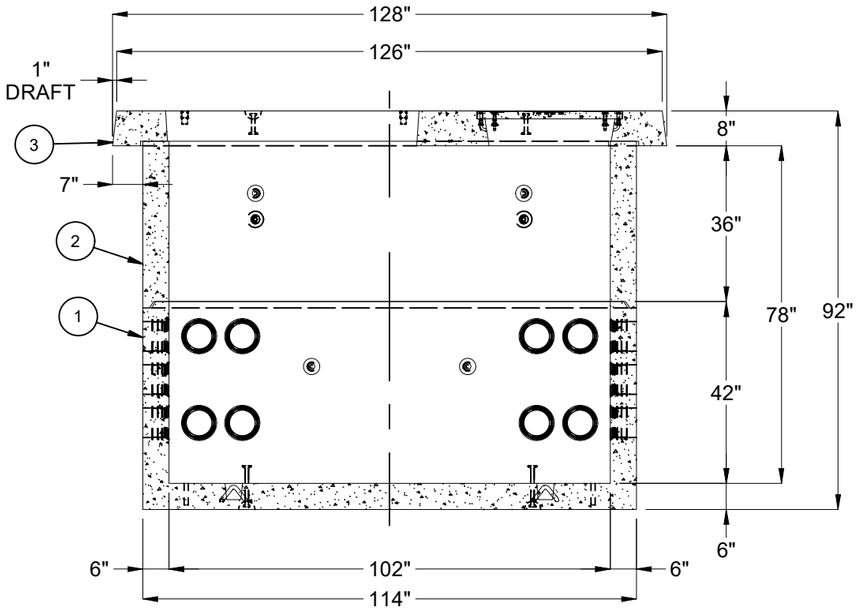

SECTION A-A

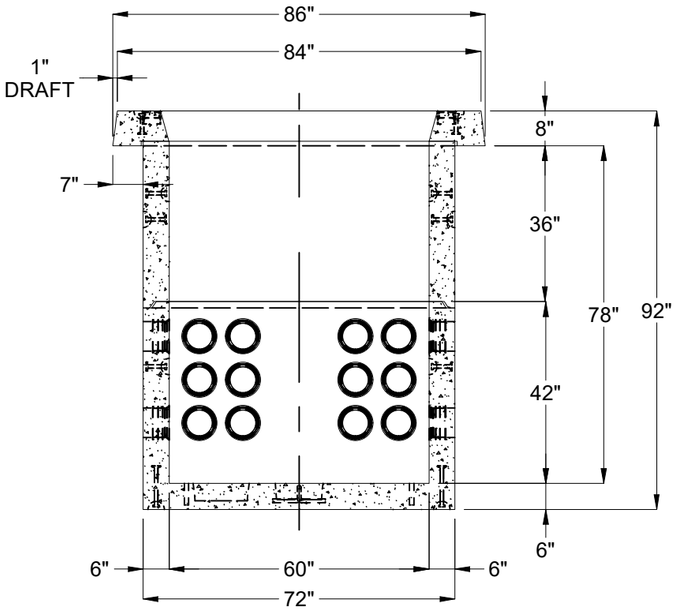

SECTION B-B

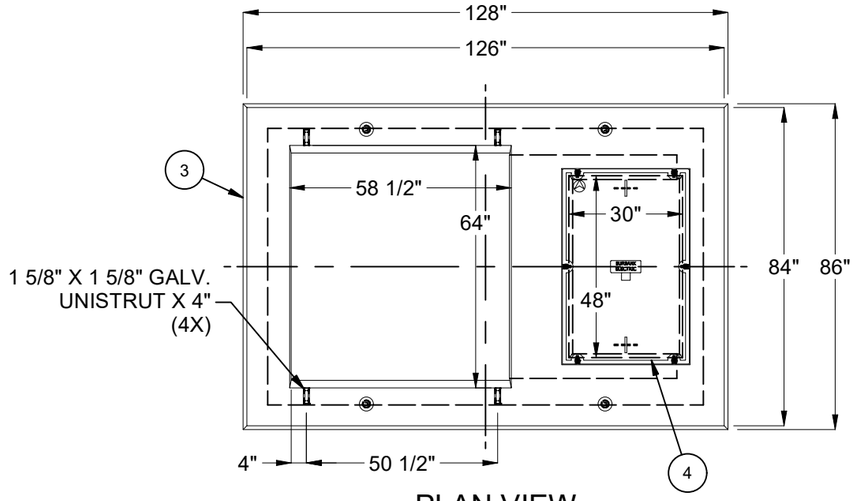

PLAN VIEW

(TRANSFORMER PAD ONLY)

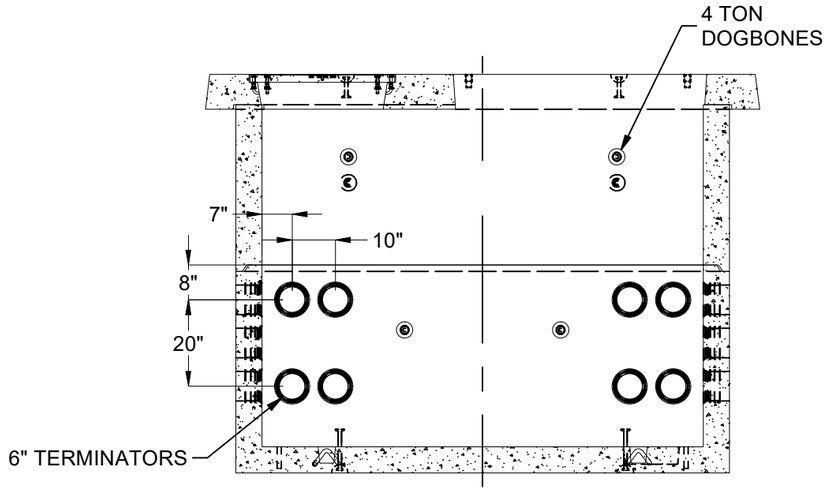

SECTION C-C

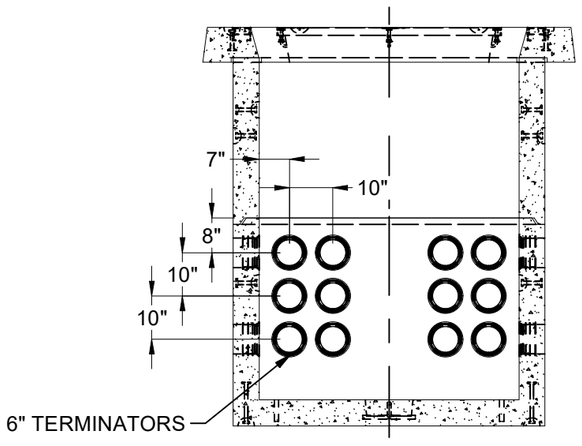

SECTION D-D

100010512.idw

BURY DEPTH:	-0.3' - 0.3' to Top		
WATER LEVEL:	3.0'	APPROX. WEIGHT:	21772.21 Lbs
DESIGN SPEC:	ACI 318,ASTM C857	LOADING SPEC:	A-16 (AASHTO HS20-44)
AGENCY:	Burbank	AGENCY SPEC:	S-462G

JENSEN PRECAST EST. 1968

WWW.JENSENPRECAST.COM

©2024 Jensen Precast- All rights reserved.
All materials appearing as Jensen Precast documents and the like are proprietary work product and are protected under U.S. copyright and other laws.
Unless in conjunction with business conducted with Jensen Precast, any use of Jensen Precast work product without express, written consent is prohibited, and recipient is prohibited from distributing any and all work product to non-approved third parties under penalty of civil action.
This product shall only be produced in a Jensen Precast facility.

DESCRIPTION:	Slab Box Layout 60102x78 Terminators Sump 30"x48"E Burbank S-462G LAYOUT DRAWING		REV: D-3
PART NUMBER:	100010512	DRAWN BY:	J. Prado
CREATED:	3/6/2020	MODIFIED:	7/12/2024
			SHEET: 2 OF 2