DESIGN NOTES
■ CONCRETE DESIGNED IN ACCORDANCE WITH L.A.D.W.P. SPEC. P178-R8, ACI 318, AND ASTM C857, USING 5,500 PSI COMPRESSIVE STRENGTH CONCRETE AT 28 DAYS AND 60,000 PSI YIELD STRENGTH ASTM A-706 STEEL REINFORCEMENT PER CALC. #30615.
■ TRANSFORMER PAD DESIGNED FOR 100 PSF LIVE LOAD AND 850 PSF DEAD LOAD.
■ COVER IS DESIGN FOR PARKWAY LOADING.
■ CONCRETE MIX USED IN POURING THIS PRODUCT SHALL USE FLY ASH AND DCI AS AN ADMIXTURE.
■ INSTALLATION. VAULT TO BE PLACED ON A MIN. 6" COMPACTED CRUSHED ROCK 1", GRADE A or CONCRETE AGGREGATE #3, GRADE B (SSPWC, SUBSECTIONS 200-1.2 & 200-1.4), INSTALLATION AND EVEN LOAD DISTRIBUTION.
■ EACH CONCRETE SECTION SHALL BE STENCILED ON THE INSIDE & OUTSIDE WITH "JENSEN", THE DESIGNATION "DWP/FA-CN" or "DWP/F-CN-SC" IF SCC MIX USED, AND THE DATE OF POUR.
■ EACH CONCRETE SECTION SHALL HAVE CAST-IN ON THE INSIDE "JENSEN", THE YEAR, AND THE DESIGNATION "FA-CN" or "F-CN-SC" IF SCC MIX USED.
■ MINIMUM EXCAVATION SIZE: 4'-8" X 6'-8" X DEPTH REQ'D.

BILL OF MATERIALS

ITEM	UNIT QTY	QTY	PART NUMBER	DESCRIPTION	MASS (lb)
1	1	1	100012315	Riser 3672x42 Terminators LADWP UB721-09 R12	3088
2	1	1	100012275	Pad 6084x6 24"x36"E LADWP UB721-09 R12	2004
3	1	1	100006619	DOOR 2436 PED DROP-IN DP GALV SC2436-PBA-12	71
4	1	4	100008105	PENTA BOLT 1/2-13 UNC 2-1/2 304SS W/CAPWASH	
5	1	1	100006748	NAME PLATE SS - LADWP-E	
6	1	1	100007650	NAME PLATE HARDWARE KIT	
7	1.000 ul	1.000 ul	100005749	SEALANT JOINT BUTYL RUBBER ASTM C-990 AND M198 CS-102 1IN EQUIV X14.5FT PER BOX 118FT	

100010394.idw

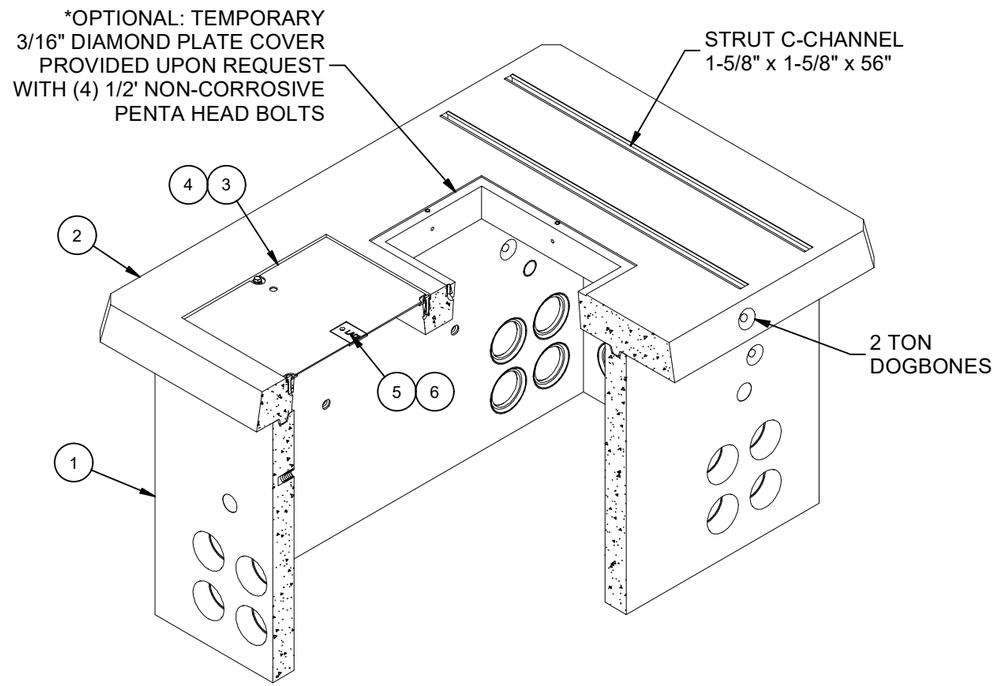

ISOMETRIC VIEW

LIFTING NOTES
■ FIELD INSTALLATION: PLANT DEMOLDING: MINIMUM HANDLING CONCRETE STRENGTH F'c = 5500 PSI RIGGING EQUALIZER REQUIRED TO EQUALIZE LOAD TO 4 LIFTING POINTS WITH A SLING ANGLE BETWEEN 60° AND 90°

REVISION HISTORY			
REV	DESCRIPTION	DATE	APPROVED
C-1	REPLACED 2"TERM WITH 2"PVC PIPE & CAP	12/18/2025	

BURY DEPTH:	-0.4' - -0.0' to Top		
WATER LEVEL:	3.0'	APPROX. WEIGHT:	5256.47 Lbs
DESIGN SPEC:	ACI 318,ASTM C857	LOADING SPEC:	300 psf Equipment
AGENCY:	LADWP	AGENCY SPEC:	UB721-09 R12

Infrastructure
JENSEN
WWW.JENSENPRECAST.COM

©2025 Jensen Infrastructure - All rights reserved.
All materials appearing as Jensen Infrastructure documents and the like are proprietary work product and are protected under U.S. copyright and other laws.
Unless in conjunction with business conducted with Jensen Infrastructure any use of Jensen Infrastructure work product without express, written consent is prohibited, and recipient is prohibited from distributing any and all work product to non-approved third parties under penalty of civil action. This product shall only be produced in a Jensen Infrastructure facility.

DESCRIPTION:	Slab Box Layout 3672x42 Terminators 30"x48"E LADWP UB721-09 R12 LAYOUT REVIEW		REV: C-1
PART NUMBER:	100010394	DRAWN BY:	J. Prado
CREATED:	3/20/2024	MODIFIED:	12/18/2025
			SHEET: 1 OF 2

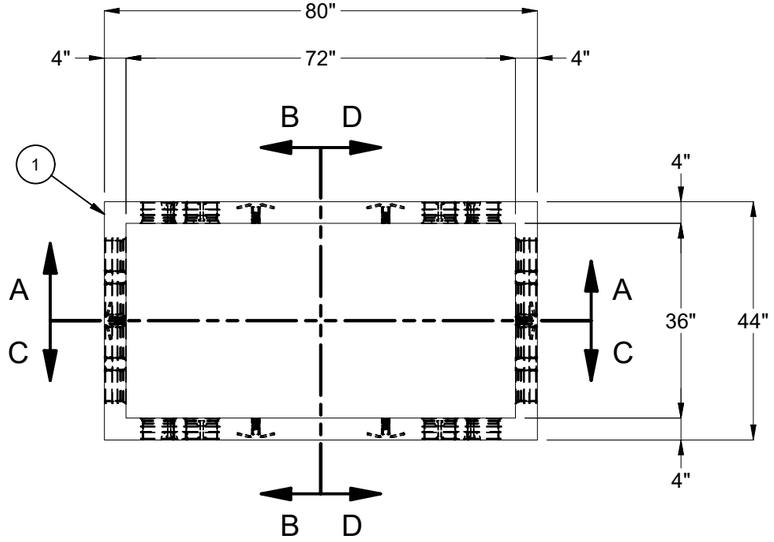

PLAN VIEW
(W/ OUT TRANSFORMER PAD)

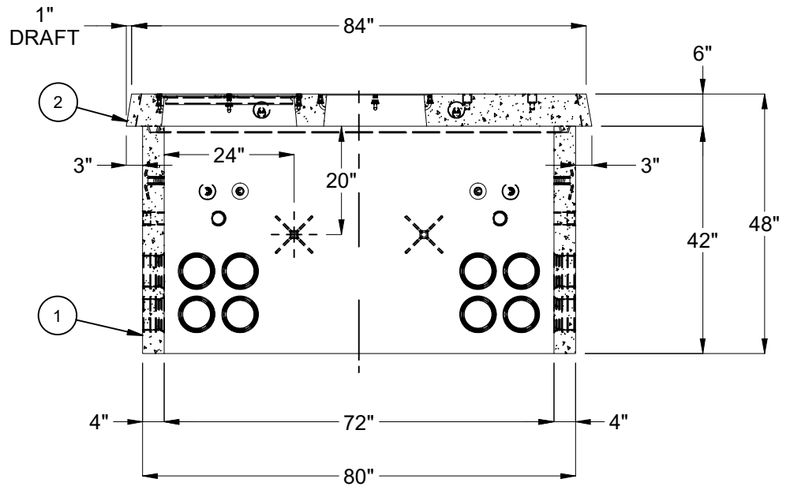

SECTION A-A

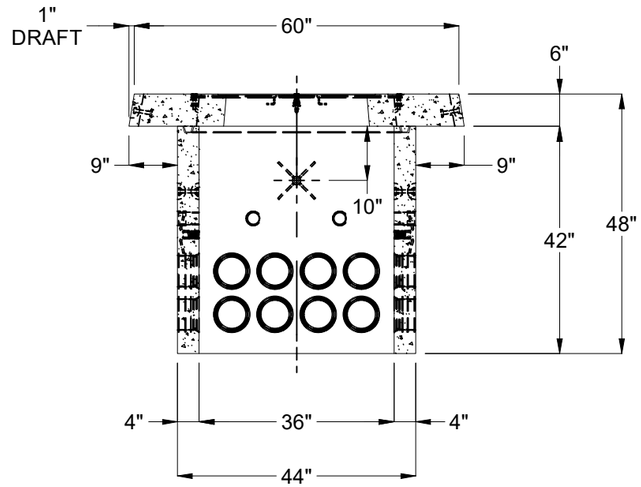

SECTION B-B

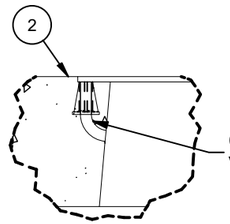

CLEANOUT PASSAGE
VERTICAL OR CURVED

DETAIL E
(INSERTS AROUND OPENINGS)

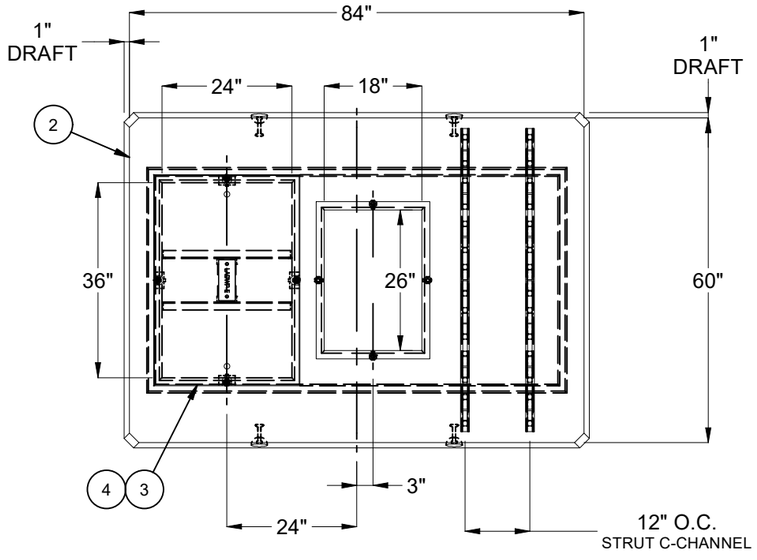

PLAN VIEW
(TRANSFORMER PAD)

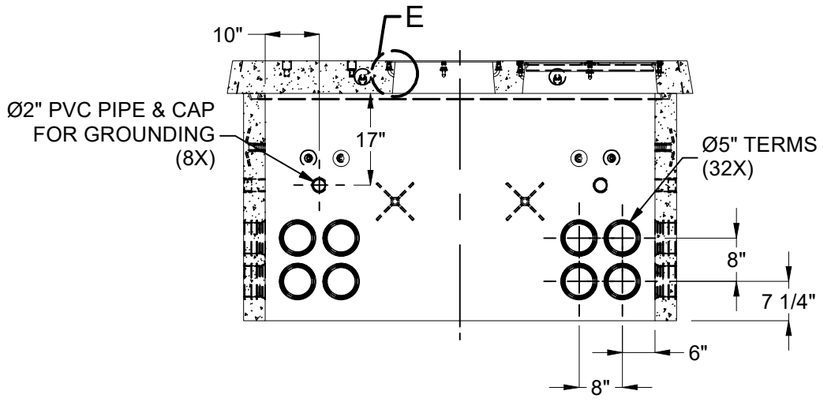

SECTION C-C

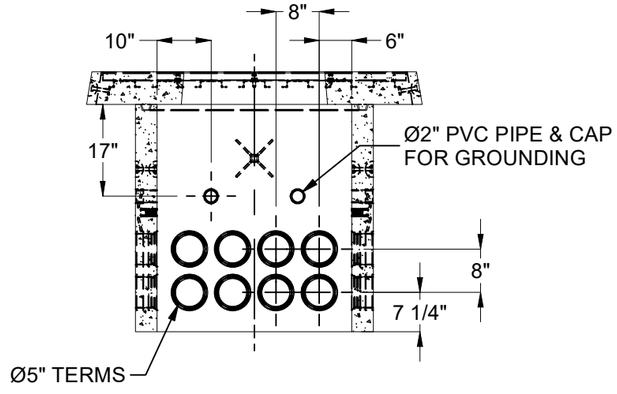

SECTION D-D

BURY DEPTH:	-0.4' - -0.0' to Top		
WATER LEVEL:	3.0'	APPROX. WEIGHT:	5256.47 Lbs
DESIGN SPEC:	ACI 318,ASTM C857	LOADING SPEC:	300 psf Equipment
AGENCY:	LADWP	AGENCY SPEC:	UB721-09 R12

Infrastructure
JENSEN
WWW.JENSENPRECAST.COM

©2025 Jensen Infrastructure - All rights reserved.
All materials appearing as Jensen Infrastructure documents and the like are proprietary work product and are protected under U.S. copyright and other laws.
Unless in conjunction with business conducted with Jensen Infrastructure any use of Jensen Infrastructure work product without express, written consent is prohibited, and recipient is prohibited from distributing any and all work product to non-approved third parties under penalty of civil action. This product shall only be produced in a Jensen Infrastructure facility.

DESCRIPTION:	Slab Box Layout 3672x42 Terminators 30"x48"E LADWP UB721-09 R12 LAYOUT DRAWING		REV: C-1
PART NUMBER:	100010394	DRAWN BY:	J. Prado
CREATED:	3/20/2024	MODIFIED:	12/18/2025
			SHEET: 2 OF 2

100010394.idw