DESIGN NOTES
■ ENCLOSURE DESIGNED IN ACCORDANCE WITH AASHTO H-20-44 TRAFFIC BRIDGE LOADING USING 6,000 PSI COMPRESSIVE STRENGTH CONCRETE AND 60,000 PSI YIELD STRENGTH ASTM A-706 STEEL REINFORCEMENT PER CALCS. #31721.
■ COVER AND TRANSFORMER PAD DESIGN FOR PARKWAY 300 PSF LOADING.
■ MINIMUM EXCAVATION SIZE: 4'-8" X 7'-8" X DEPTH REQ'D.
■ VAULT TO BE PLACED ON A MIN. 6” BASE OF CRUSHER RUN FOR EASE OF INSTALLATION AND EVEN LOAD DISTRIBUTION.
■ EXTERIOR SURFACES OF STRUCTURE(S) SHALL BE COATED WITH CoatMasters CM7007 IMRAE.
■ STRUCTURES TO BE STENCILED, "JENSEN PRECAST", WITH "TIME" AND "DATE OF POUR", AND SDGE STOCK NUMBER ON EXTERIOR AND INTERIOR WALLS.
■ STENCIL "GND" IN RED LETTERS
■ FOR COMPLETE DESIGN AND PRODUCT INFORMATION CONTACT JENSEN PRECAST.

CROSS REFERENCE		
JENSEN PART No.	SHORT DESCRIPTION	SDGE STOCK No.
100012221	3314 12" Top section with frame	S336210
100012220	3314 Intermediate 12"	S336212
100012222	3426 Distribution Transformer Pad 75" x 78"	S514005
100006665	3426 Cover, Parkway	S286843

BILL OF MATERIALS

ITEM	UNIT QTY	QTY	PART NUMBER	DESCRIPTION	MASS (lb)
1	1	2	100012220	Riser 3672x12 SDGE 3314	985
2	1	1	100012221	Top Riser 3672x12 Cast-In Frame SDGE 3314	978
3	1	1	100012222	Pad 7376x6 SDGE 3426	2505
4	1	1	100006665	DAS1-B-3672-DX-TRX-G-FONT-BW-SDG&E BJ-P-(SC3672-PSRGV-1010)	173
5	1	4	100004454	BOLT PENTA 1/2-13 UNC 0.875 HEAD 2.5L SS	
6	2.000 gal	2.000 gal	100038043	COATING WATERPROOFING CoatMasters CM7007 IMRAE	
7	1.000 ul	1.000 ul	100005749	SEALANT JOINT BUTYL RUBBER ASTM C-990 AND M198 CS-102 1IN EQUIV X14.5FT PER BOX 118FT	

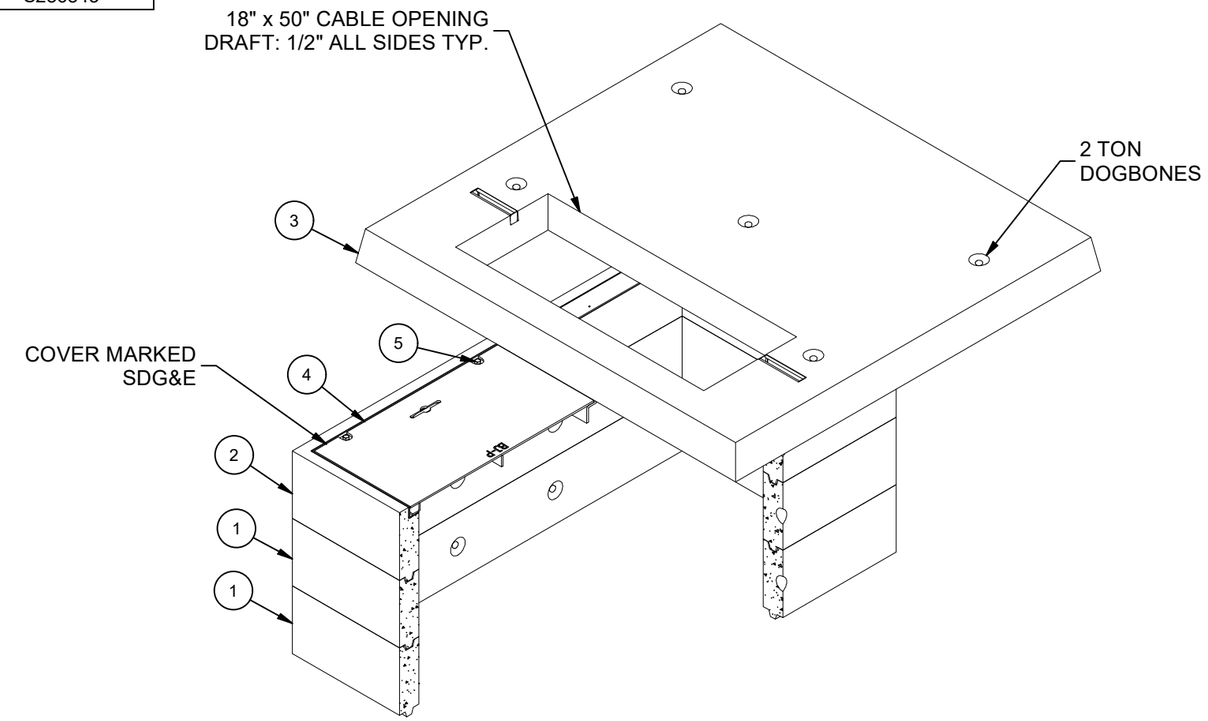

ISO VIEW

LIFTING NOTES
■ THIS CONCRETE PRODUCT IS DESIGNED TO BE LIFTED WITH (4) EQUALLY LOADED RIGGINGS LEGS MIN. 60° SLING ANGLE, MEASURED FROM HORIZONTAL.

BURY DEPTH:	Agency Specified to Agency Specified		
WATER LEVEL:	3.0'	APPROX. WEIGHT:	5523.93 Lbs
DESIGN SPEC:	ACI 318,ASTM C857	LOADING SPEC:	A-03 (300 psf)
AGENCY:	SDGE	AGENCY SPEC:	3426

JENSEN PRECAST EST. 1968

WWW.JENSENPRECAST.COM

©2023 Jensen Precast- All rights reserved.
All materials appearing as Jensen Precast documents and the like are proprietary work product and are protected under U.S. copyright and other laws.
Unless in conjunction with business conducted with Jensen Precast, any use of Jensen Precast work product without express, written consent is prohibited, and recipient is prohibited from distributing any and all work product to non-approved third parties under penalty of civil action.

REVISION HISTORY			
REV	DESCRIPTION	DATE	APPROVED
B-3	INITIAL RELEASE INVENTOR	11/13/2023	

DESCRIPTION: Slab Box Layout 3672x36 36"x36"E SDGE 3426 Ext. Coating - IMRAE CoatMasters CM7007 LAYOUT REVIEW				REV: B-4
PART NUMBER:	100010392	DRAWN BY:	J. Prado	SHEET: 1 OF 2
CREATED:	11/10/2023	MODIFIED:	11/13/2023	

100010392.idw

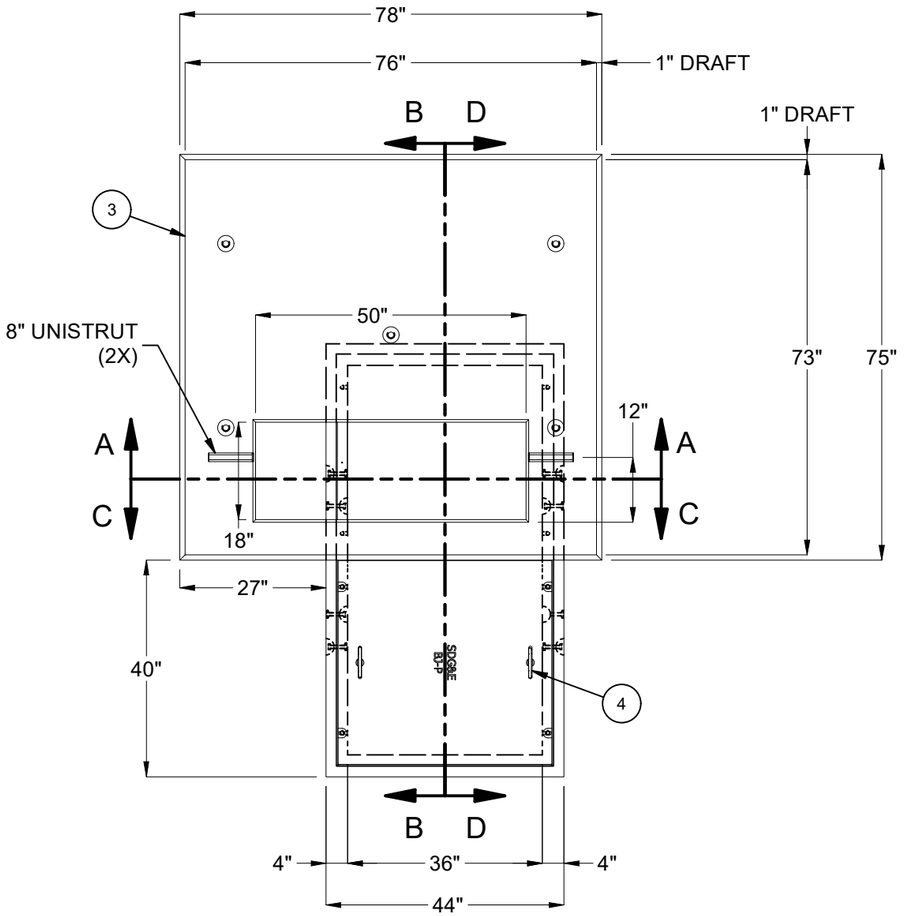

PLAN VIEW

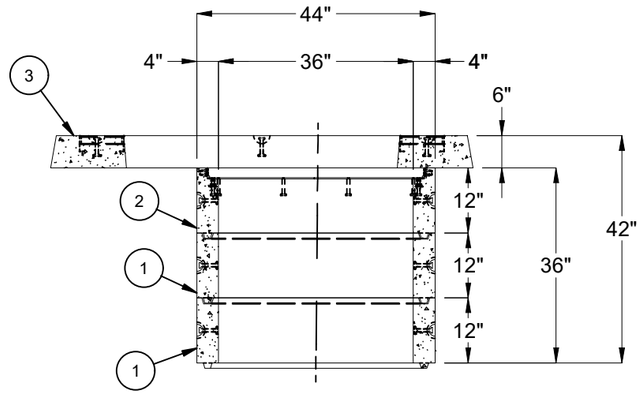

SECTION A-A

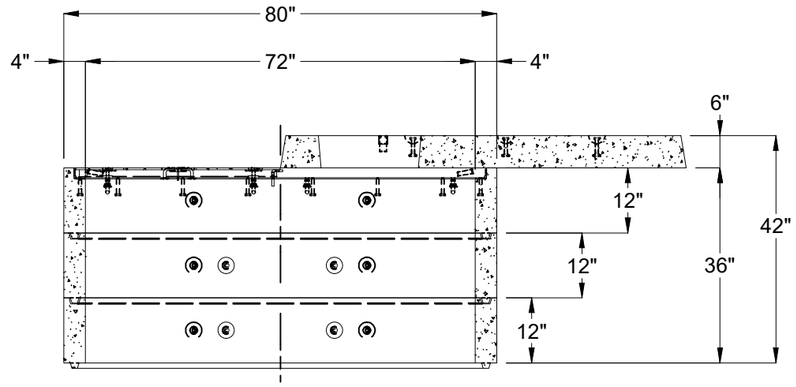

SECTION B-B

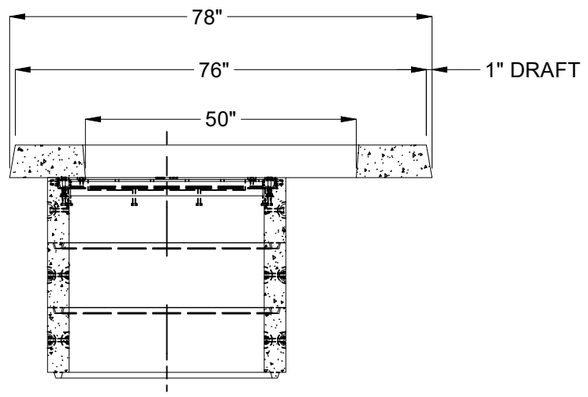

SECTION C-C

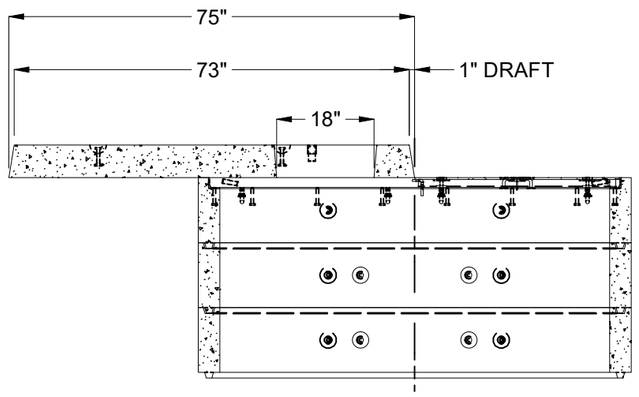

SECTION D-D

BURY DEPTH:	Agency Specified to Agency Specified		
WATER LEVEL:	3.0'	APPROX. WEIGHT:	5523.93 Lbs
DESIGN SPEC:	ACI 318,ASTM C857	LOADING SPEC:	A-03 (300 psf)
AGENCY:	SDGE	AGENCY SPEC:	3426

JENSEN PRECAST EST. 1968

WWW.JENSENPRECAST.COM

©2023 Jensen Precast- All rights reserved.
All materials appearing as Jensen Precast documents and the like are proprietary work product and are protected under U.S. copyright and other laws.
Unless in conjunction with business conducted with Jensen Precast, any use of Jensen Precast work product without express, written consent is prohibited, and recipient is prohibited from distributing any and all work product to non-approved third parties under penalty of civil action.

DESCRIPTION:	Slab Box Layout 3672x36 36"x36"E SDGE 3426 Ext. Coating - IMRAE CoatMasters CM7007 LAYOUT DRAWING		REV: B-4
PART NUMBER:	100010392	DRAWN BY:	J. Prado
CREATED:	11/10/2023	MODIFIED:	11/13/2023
			SHEET: 2 OF 2

100010392.idw