DESIGN NOTES
■ DESIGNED IN ACCORDANCE WITH AASHTO HS20-44 TRAFFIC BRIDGE LOADING USING 5,500 PSI COMPRESSIVE STRENGTH CONCRETE AND 60,000 PSI YIELD STRENGTH ASTM A-706 STEEL REINFORCEMENT PER CALCS. #30750.
■ PULL BOX TO BE PLACED ON A MIN. 6" BASE OF CRUSHER RUN FOR EASE OF INSTALLATION AND EVEN LOAD DISTRIBUTION.
■ MINIMUM EXCAVATION SIZE: 5'-1" X 7'-2" X DEPTH REQ'D.
■ ALL PARTS TO BE STENCILED: MFG DATE / JOB NUMBER / PRODUCT ID / WEIGHT.
■ FOR COMPLETE DESIGN AND PRODUCT INFORMATION CONTACT JENSEN PRECAST.

BILL OF MATERIALS

ITEM	UNIT QTY	QTY	PART NUMBER	DESCRIPTION	MASS (lb)
1	1	1	100012156	Vault 3048x36 Rect. Bottom Section Knockout Ducted,Sump Edison	3205
2	1	1	100012262	Pad 4872x6 Edison UGS SS591	1049
3	1.000 ul	1.000 ul	100005749	SEALANT JOINT BUTYL RUBBER ASTM C-990 AND M198 CS-102 1IN EQUIV X14.5FT PER BOX 118FT	

100010337.idw

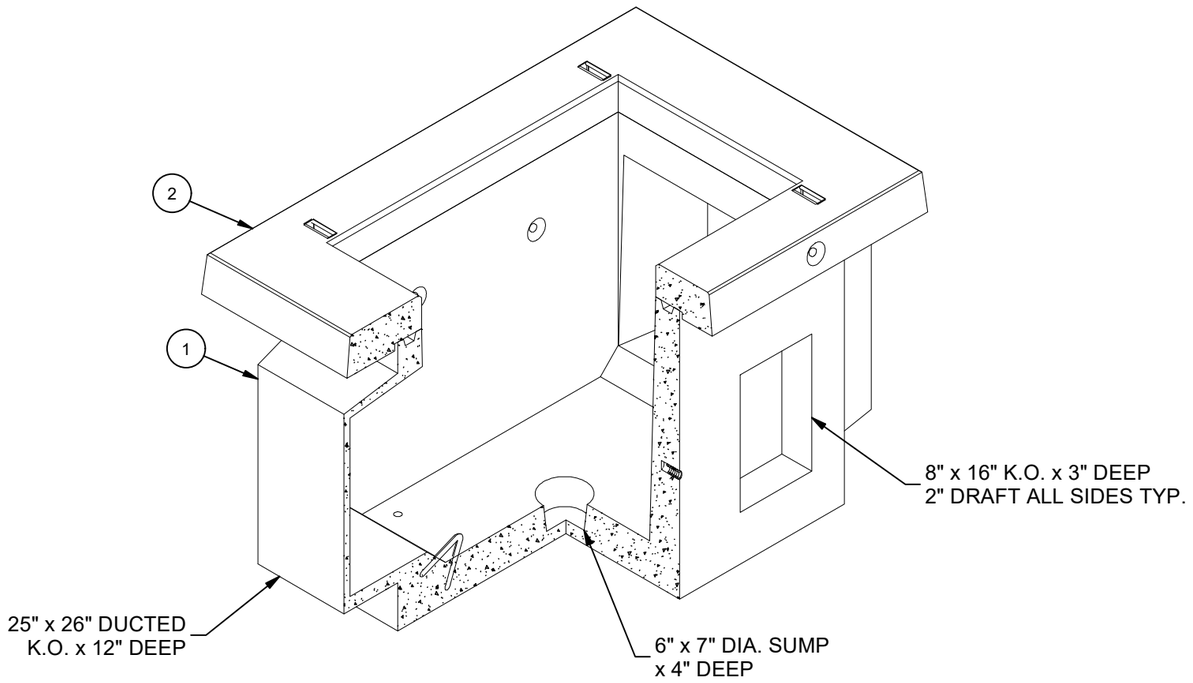

ISOMETRIC VIEW

LIFTING NOTES
■ FIELD INSTALLATION: PLANT DEMOLDING: MINIMUM HANDLING CONCRETE STRENGTH F'c = 5500 PSI RIGGING EQUALIZER REQUIRED TO EQUALIZE LOAD TO 4 LIFTING POINTS WITH A SLING ANGLE BETWEEN 60° AND 90°

REVISION HISTORY			
REV	DESCRIPTION	DATE	APPROVED
B-2	RELEASE IN INVENTOR	12/5/2022	

BURY DEPTH:	-0.3' - -0.3' to Top		
WATER LEVEL:	3.0'	APPROX. WEIGHT:	4254.13 Lbs
DESIGN SPEC:	ASTM C857,ACI 318	LOADING SPEC:	A-16 (AASHTO HS20-44)
AGENCY:	EDISON	AGENCY SPEC:	UGS SS591, PH-2

JENSEN PRECAST EST. 1968

WWW.JENSENPRECAST.COM

©2022 Jensen Precast- All rights reserved.
All materials appearing as Jensen Precast documents and the like are proprietary work product and are protected under U.S. copyright and other laws.
Unless in conjunction with business conducted with Jensen Precast, any use of Jensen Precast work product without express, written consent is prohibited, and recipient is prohibited from distributing any and all work product to non-approved third parties under penalty of civil action.

DESCRIPTION:	Vault 3048 Layout Assembly EDISON UGS SS591, PH-2 LAYOUT REVIEW		REV: B-2
PART NUMBER:	100010337	DRAWN BY:	S. Rodarte
CREATED:	10/12/2020	MODIFIED:	12/5/2022
			SHEET: 1 OF 2

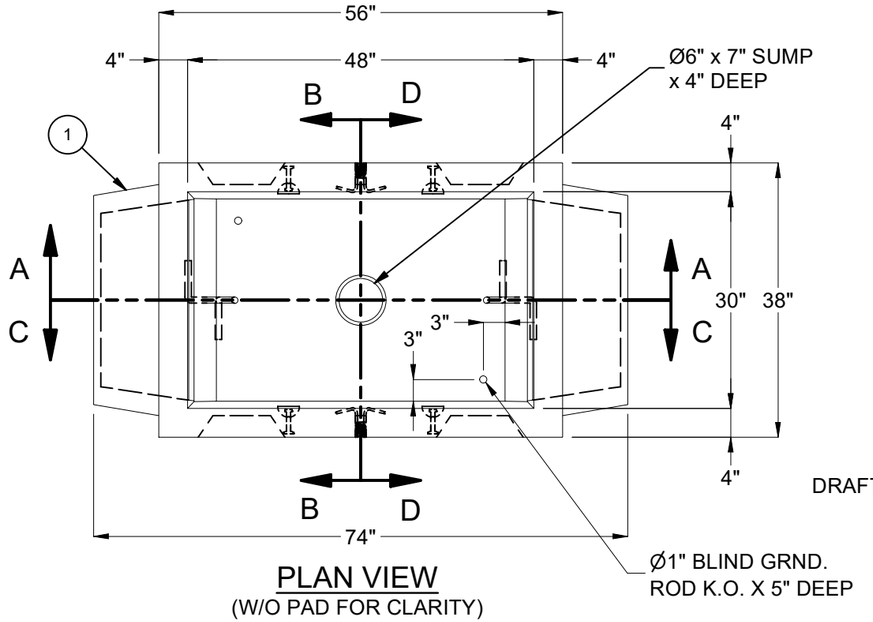

PLAN VIEW
(W/O PAD FOR CLARITY)

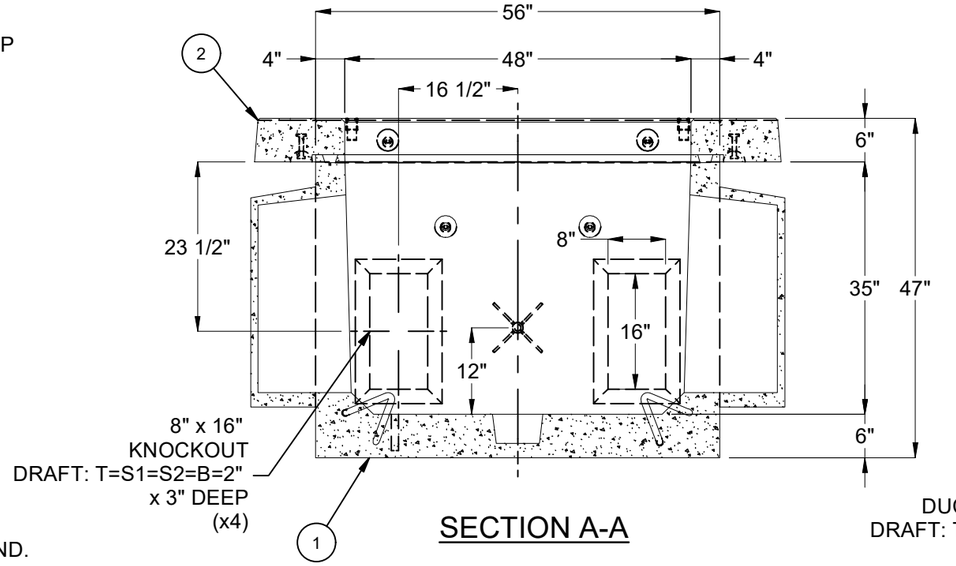

SECTION A-A

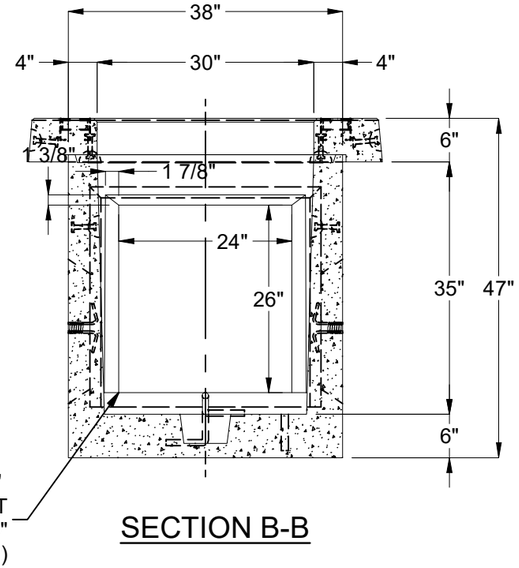

SECTION B-B

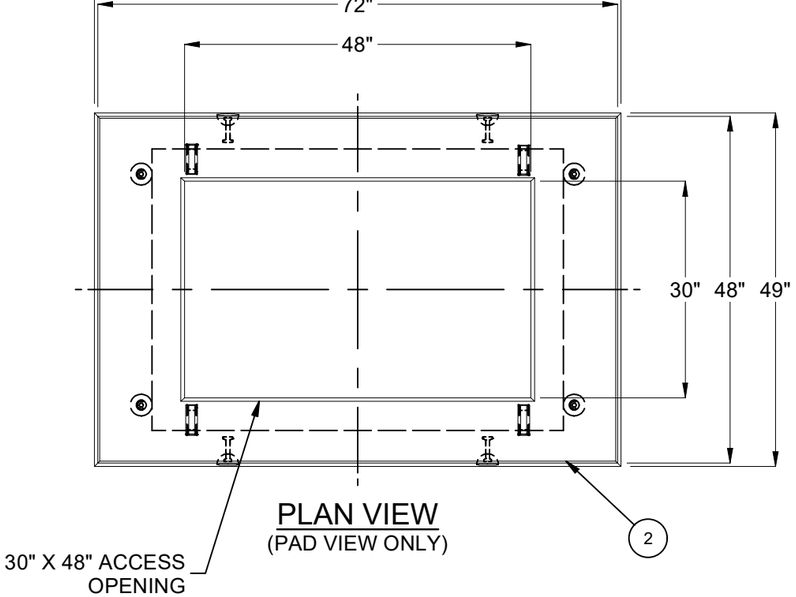

PLAN VIEW
(PAD VIEW ONLY)

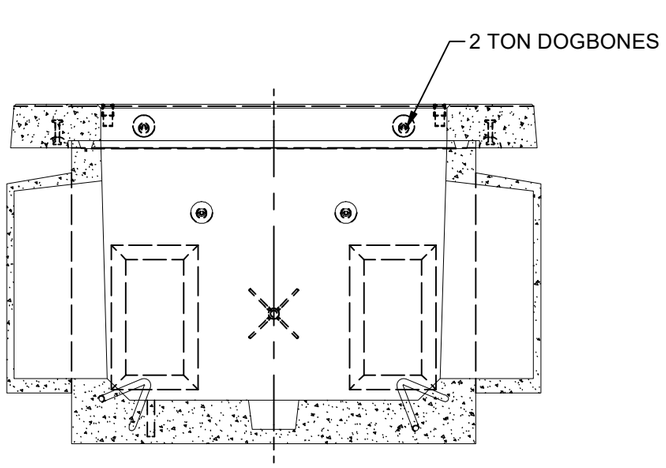

SECTION C-C

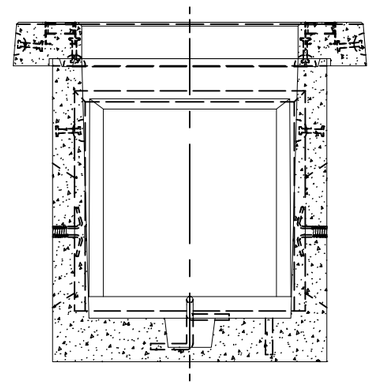

SECTION D-D

100010337.idw

BURY DEPTH:	-0.3' - -0.3' to Top		
WATER LEVEL:	3.0'	APPROX. WEIGHT:	4254.13 Lbs
DESIGN SPEC:	ASTM C857,ACI 318	LOADING SPEC:	A-16 (AASHTO HS20-44)
AGENCY:	EDISON	AGENCY SPEC:	UGS SS591, PH-2

JENSEN PRECAST EST. 1968

WWW.JENSENPRECAST.COM

©2022 Jensen Precast- All rights reserved.
All materials appearing as Jensen Precast documents and the like are proprietary work product and are protected under U.S. copyright and other laws.
Unless in conjunction with business conducted with Jensen Precast, any use of Jensen Precast work product without express, written consent is prohibited, and recipient is prohibited from distributing any and all work product to non-approved third parties under penalty of civil action.

DESCRIPTION:	Vault 3048 Layout Assembly EDISON UGS SS591, PH-2 LAYOUT REVIEW		REV: B-2
PART NUMBER:	100010337	DRAWN BY:	S. Rodarte
CREATED:	10/12/2020	MODIFIED:	12/5/2022
			SHEET: 2 OF 2