NOTES
■ FOR COMPLETE DESIGN AND PRODUCT INFORMATION CONTACT JENSEN PRECAST.

BILL OF MATERIALS

ITEM	UNIT QTY	QTY	PART NUMBER	DESCRIPTION
1	9.453 ft^3	9.453 ft^3	100011425	CONCRETE MIX GENERIC 5000 PSI
2	1	2	100002854	INSERT MH RUNG PLASTIC SP SOCKET
3	1	1	200053627	REINFORCING MAT 200053627

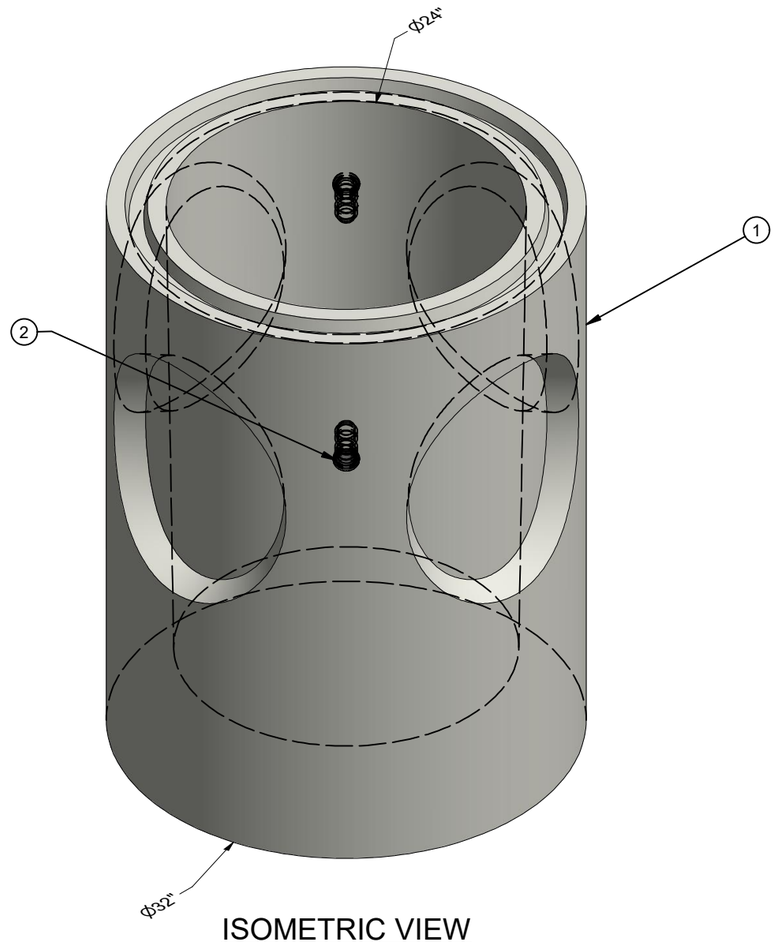

ISOMETRIC VIEW

100010037.idw

LIFTING NOTES
■ THIS CONCRETE PRODUCT IS DESIGNED TO BE LIFTED AT 2000PSI WITH 2 LIFT CONNECTIONS EQUALLY LOADED TO 2 LIFTING POINTS AT A MINIMUM 60° SLING ANGLE, MEASURED FROM HORIZONTAL.

BURY DEPTH:	0.0' - 15.0' to Top		
WATER LEVEL:	0.0'	APPROX. WEIGHT:	1424.63 Lbs
DESIGN SPEC:	ASTM C478	LOADING SPEC:	A-16 (AASHTO HS20-44)
REINFORCEMENT TYPE:	Rebar,WWR Plain	LIFTING TYPE:	SP Socket

JENSEN PRECAST EST. 1968

WWW.JENSENPRECAST.COM

©2021 Jensen Precast- All rights reserved.
All materials appearing as Jensen Precast documents and the like are proprietary work product and are protected under U.S. copyright and other laws.
Unless in conjunction with business conducted with Jensen Precast, any use of Jensen Precast work product without express, written consent is prohibited, and recipient is prohibited from distributing any and all work product to non-approved third parties under penalty of civil action.

REVISION HISTORY

REV	DESCRIPTION	DATE	BY
A	INITIAL RELEASE		
B	2105-50896 DI200 UPDATES	5-13-21	DCH

DESCRIPTION:	Manhole D2432x36 Rnd. Bottom Section Knockout NC CASTING LAYOUT		REV: B-2
PART NUMBER:	100010037	DRAWN BY: MLR	SHEET: 1 OF 2
CREATED:		MODIFIED: 6/17/2021	

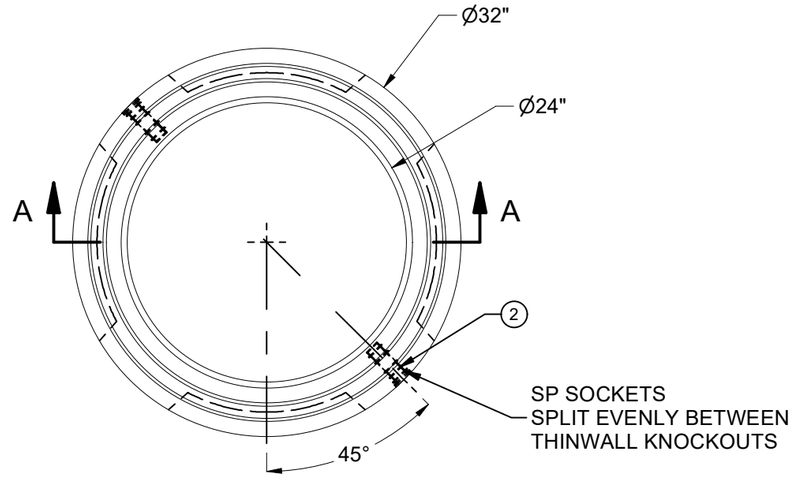

PLAN VIEW

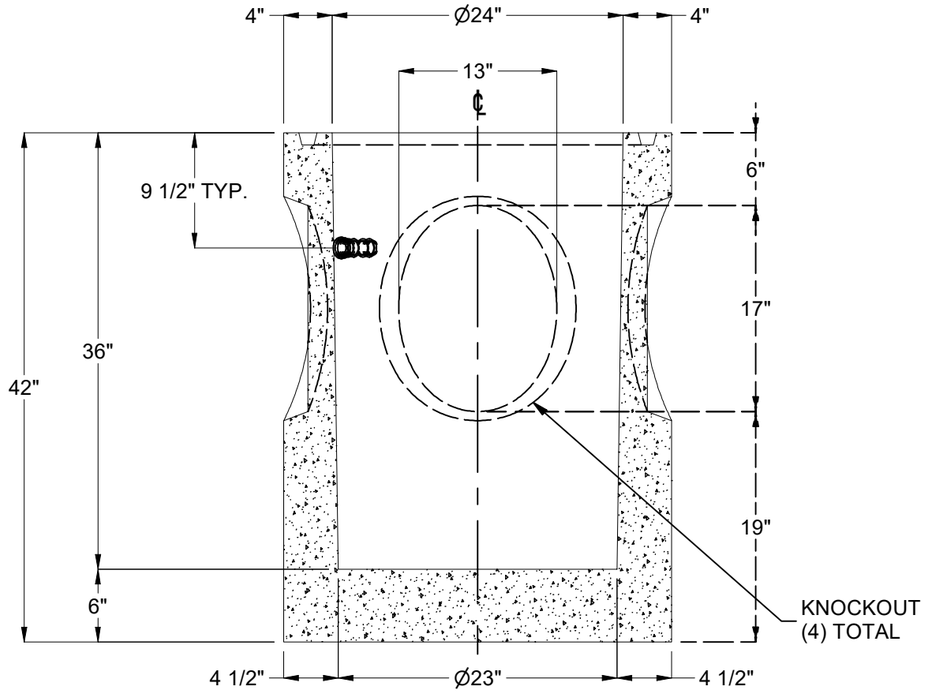

SECTION A-A

BURY DEPTH:	0.0' - 15.0' to Top		
WATER LEVEL:	0.0'	APPROX. WEIGHT:	1424.63 Lbs
DESIGN SPEC:	ASTM C478	LOADING SPEC:	A-16 (AASHTO HS20-44)
REINFORCEMENT TYPE:	Rebar,WWR Plain	LIFTING TYPE:	SP Socket

JENSEN PRECAST EST. 1968

WWW.JENSENPRECAST.COM

©2021 Jensen Precast- All rights reserved.
All materials appearing as Jensen Precast documents and the like are proprietary work product and are protected under U.S. copyright and other laws.
Unless in conjunction with business conducted with Jensen Precast, any use of Jensen Precast work product without express, written consent is prohibited, and recipient is prohibited from distributing any and all work product to non-approved third parties under penalty of civil action.

DESCRIPTION:	Manhole D2432x36 Rnd. Bottom Section Knockout NC CASTING DRAWING		REV: B-2
PART NUMBER:	100010037	DRAWN BY:	MLR
CREATED:		MODIFIED:	6/17/2021
			SHEET: 2 OF 2

100010037.idw