DESIGN NOTES
■ DESIGNED PER CALCS. #32041
■ ALL PARTS TO BE STENCILED: MFG DATE / PRODUCT ID / WEIGHT.

BILL OF MATERIALS

ITEM	UNIT QTY	QTY	PART NUMBER	DESCRIPTION
1	28.559 ft^3	28.559 ft^3	100024079	CONCRETE #19 SCC
2	1	4	100002870	ANCHOR DOGBONE P52 2T X 6-3/4" GALV
3	1	2	100007235	ANCHOR UTILITY .444DIA 4-SLAB GALV P75 4UA444
4	1	1	100017744	REINFORCING MAT 100017744

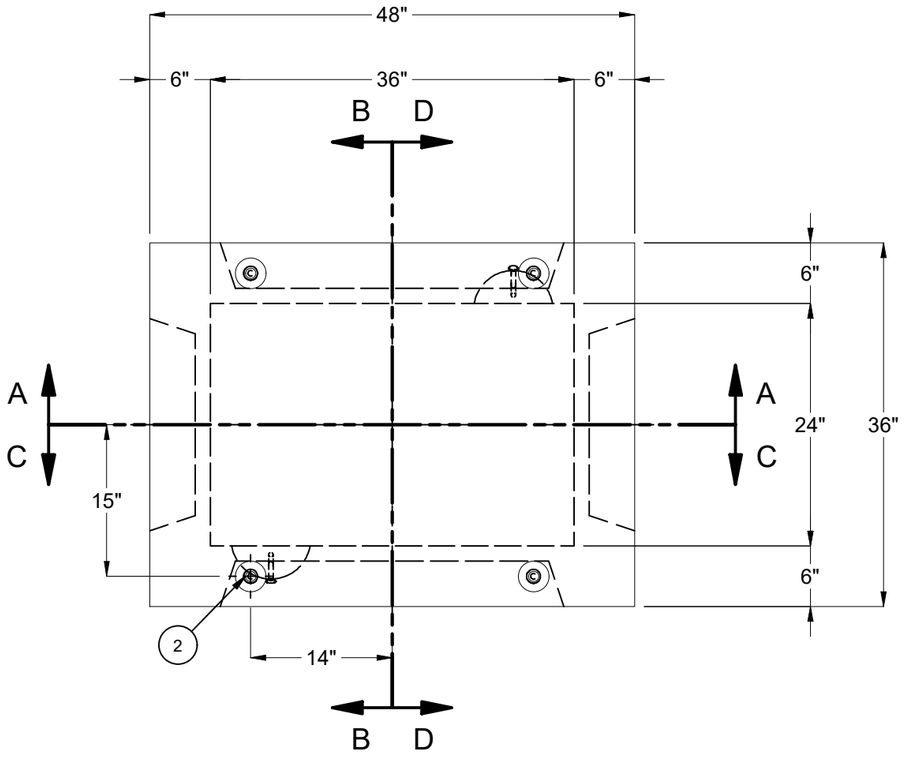

PLAN VIEW

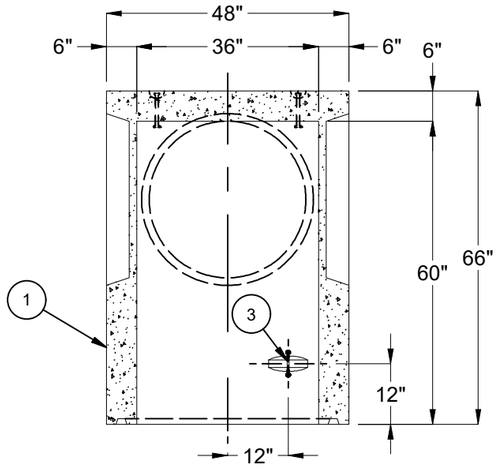

SECTION A-A

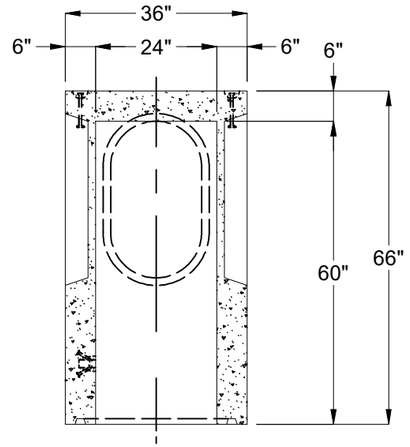

SECTION B-B

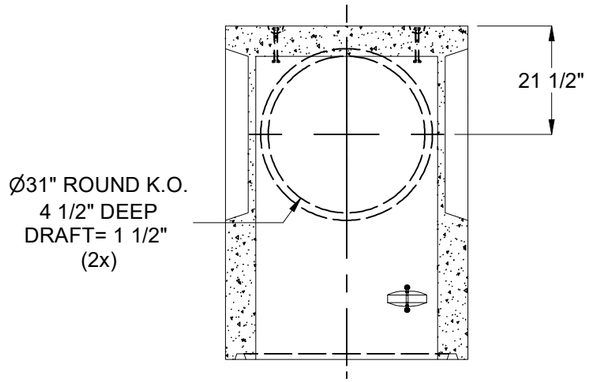

SECTION C-C

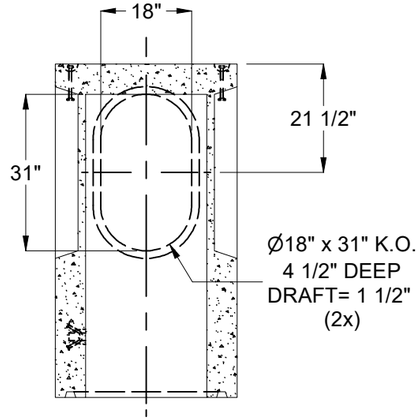

SECTION D-D

LIFTING NOTES
■ INSTALLATION: THIS CONCRETE PRODUCT IS DESIGNED TO BE LIFTED AT 5500 PSI WITH 2 LIFT CONNECTIONS EQUALLY LOADED TO 2 LIFTING POINTS AT A MINIMUM 60° SLING ANGLE, MEASURED FROM HORIZONTAL.
■ DEMOLDING: THIS CONCRETE PRODUCT IS DESIGNED TO BE LIFTED AT 2500 PSI WITH 4 LIFT CONNECTIONS EQUALLY LOADED TO 4 LIFTING POINTS AT A MINIMUM 60° SLING ANGLE, MEASURED FROM HORIZONTAL.
*All rigging shall be design by a qualified professional. Loading diagrams show illustrations of possible rigging setups to achieve the required sling angle and load leg equalization. Other valid rigging configurations are possible. A qualified professional must be consulted prior to lifting.

RIGGING DIAGRAMS*			
INSTALLATION	F	DEMOLDING	C
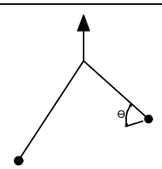		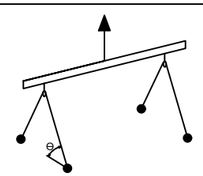	

BURY DEPTH:	0.5' - 3.0' to Top		
WATER LEVEL:	3.0'	APPROX. WEIGHT:	4295.11 Lbs
DESIGN SPEC:	ACI 318,ASTM C857	LOADING SPEC:	A-16 (AASHTO HS20-44)
REINFORCEMENT TYPE:	Rebar	LIFTING TYPE:	Dogbone

Infrastructure
JENSEN
WWW.JENSENPRECAST.COM

©2025 Jensen Infrastructure - All rights reserved.
All materials appearing as Jensen Infrastructure documents and the like are proprietary work product and are protected under U.S. copyright and other laws.
Unless in conjunction with business conducted with Jensen Infrastructure , any use of Jensen Infrastructure work product without express, written consent is prohibited, and recipient is prohibited from distributing any and all work product to non-approved third parties under penalty of civil action. This product shall only be produced in a Jensen Infrastructure facility.

REVISION HISTORY

REV	DESCRIPTION	DATE	APPROVED
B-1-1	REVISED GROOVE TO CENTER OF WALL	8/20/2025	

DESCRIPTION:	Drainage 2436x60 Rect. Bottom Section Knockout CASTING LAYOUT		REV: B-1-1
PART NUMBER:	100009965	DRAWN BY:	J. Prado
CREATED:	8/14/2019	MODIFIED:	8/20/2025
			SHEET: 1 OF 1

100009965.idw