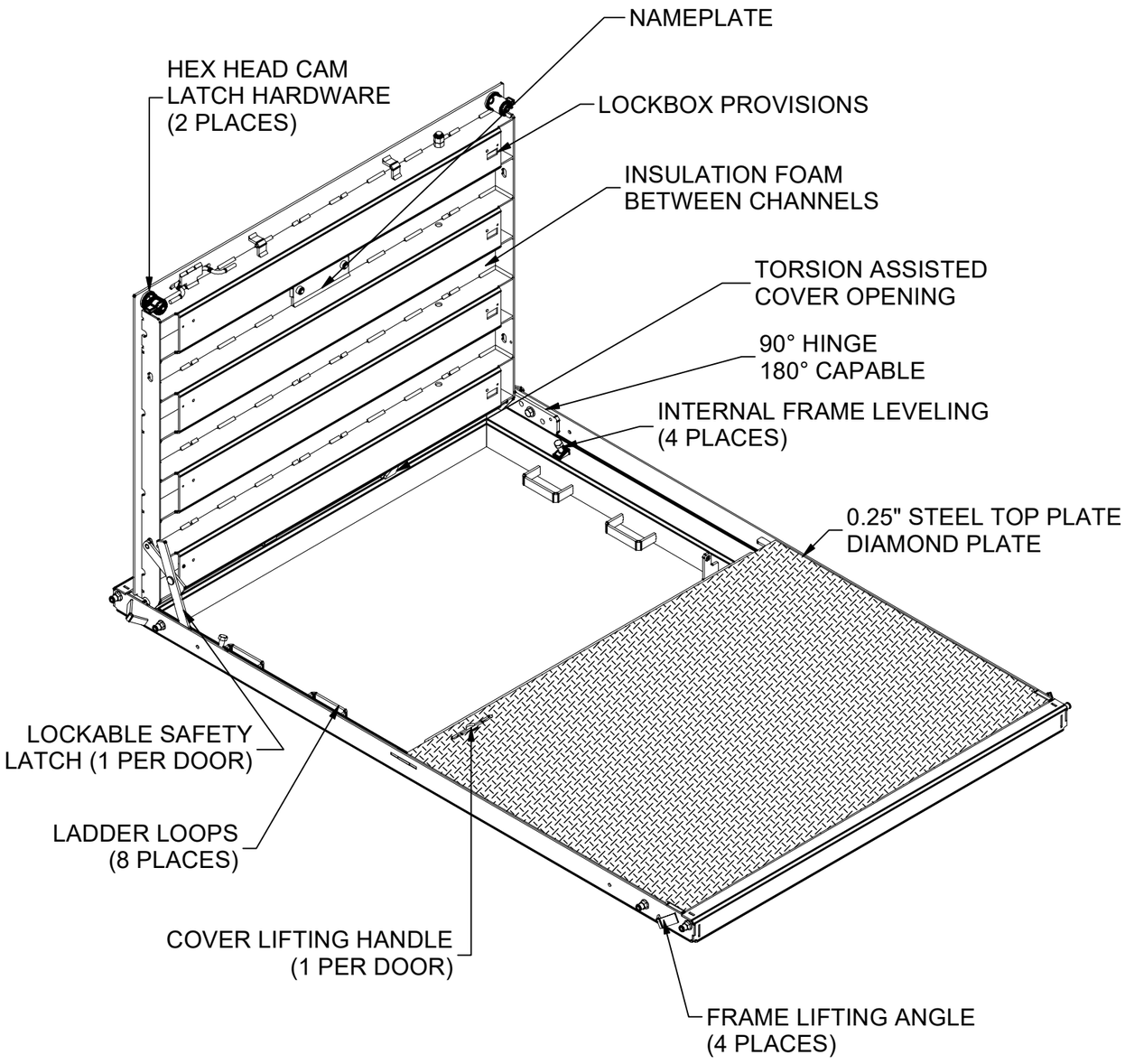

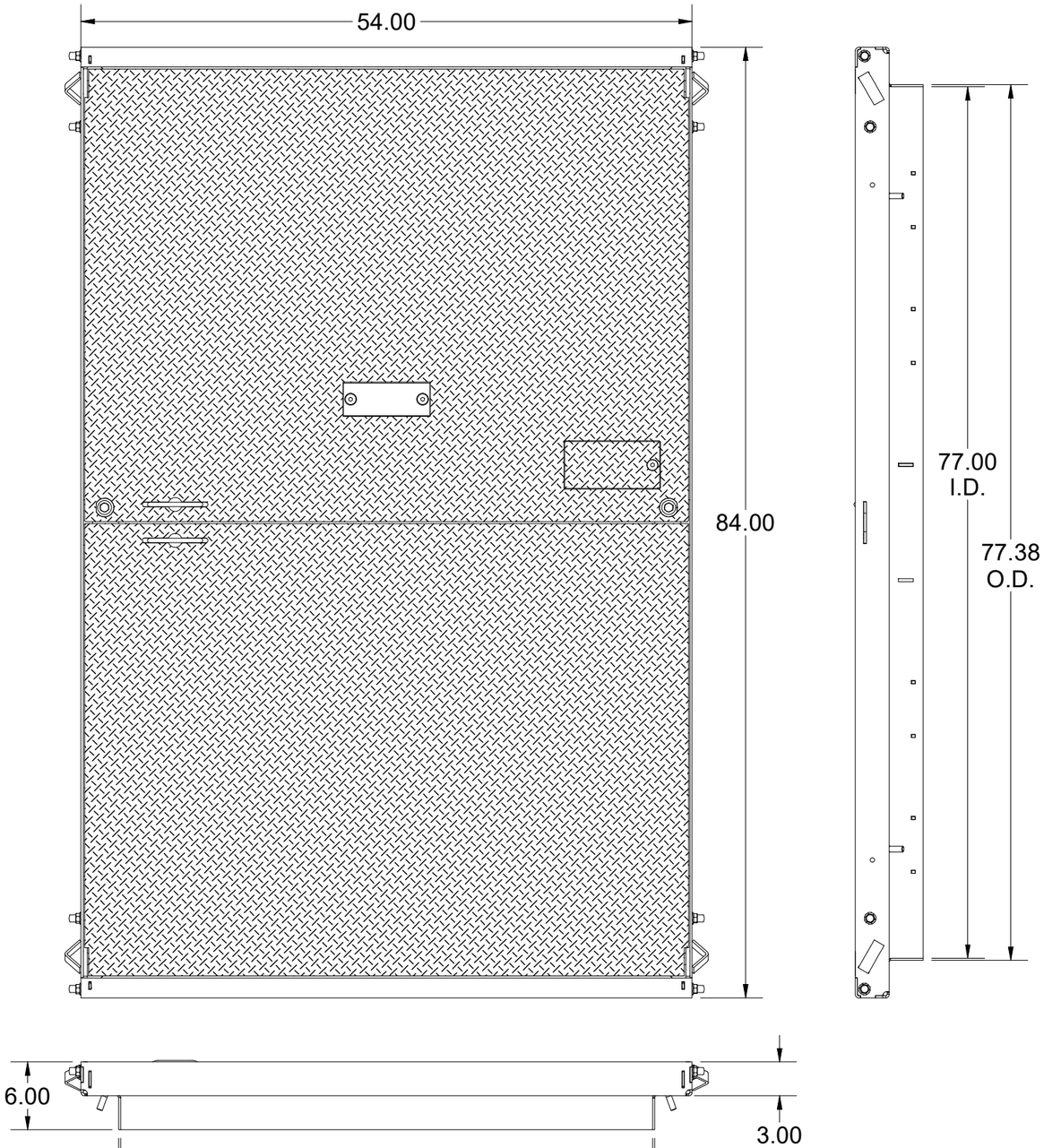

DESIGNED FOR ROBOT WELDING

LOADING CRITERIA: ASTM C1802 Load Level 04

16,000 lb load on 10" x 20" footprint, without impact restricted to parking spaces and areas within close proximity of roadways.

SURFACE:	Diamond Plate	FINISH:	Galvanized
WEIGHT:	758.97 lbs	MARKING:	

Infrastructure
JENSEN
527 Dunn Circle, Sparks, NV 89431
775-352-2716 FAX: 755-358-8127
JENSENMETALTECH.COM

©2026 Jensen Infrastructure - All rights reserved.
All materials appearing as Jensen Infrastructure documents and the like are proprietary work product and are protected under U.S. copyright and other laws. Unless in conjunction with business conducted with Jensen Infrastructure , any use of Jensen Infrastructure work product without express, written consent is prohibited, and recipient is prohibited from distributing any and all work product to non-approved third parties under penalty of civil action.
This product shall only be produced in a Jensen Infrastructure facility.

DESCRIPTION:	CAS2-4878-AH4-DP-G-IN-LL-SP-TMWA-OH06	REV:	D-2-1
	48x78 Cover Assembly (Loading Criteria Per ASTM C1802 Load Level 04, , Steel, Hinged, Handle (1 Per Door), Diamond Plate, Galvanized , Insulated, TMWA) 06	SHEET:	1
PART NUMBER:	100008794	DRAWN BY:	R. Dohr
CREATED:	12/17/2019	MODIFIED:	2/16/2026

100008794.idw

BILL OF MATERIALS

ITEM	UNIT QTY	QTY	PART NUMBER	DESCRIPTION	PART NAME
1	1	1	200033723	DAS2-T-4878-H4-DP-R-CL-LB-IN-TMWA	200033723
2	1	1	200033720	FAS-4878-AH4-R-LL-LB-TMWA-OH06	200033720
3	1	1	200064972	1/4" DP LOCK BOX LID ASSY	200064972
4	1	1	200033715	DAS2-B-4878-H4-DP-R-IN-LB-TMWA	200033715
5	1	8	100026256	LOW-STRENGTH STEEL FLANGE NUT, 1/2" - 13 THREAD SIZE	100026256
6	1	8	100011418	WASHER FLAT 1/2 NARROW ZINC	100011418
7	1	8	100007939	CAP VINYL .467 X 1/2	100007939
8	1	2	100007924	LANYARD 3/64 W/PIN COATED SS	100007924
9	1	2	100007918	COTTER PIN 0.094DIA X 1-1/4	100007918
10	1	2	100007915	SPRING COMPRESSION 055 X 5/8 X 7/8 LONG	100007915
11	1	2	100007882	Rivet Blind Grip .1875" Large Domed Head Range-0.376-0.5" Steel	100007882
12	1	2	100007876	Bolt Shoulder Socket Head - 3/8-16 UNC - SD-0.5" - SL-0.3125" - Grade 5 - Zinc	100007876
13	1	8	100007873	BOLT SHCS 3/8-16 X 1-1/4 PLATED	100007873
14	1	3	100007733	Bolt Socket Flat Countersunk Head - 1/2-13 UNC - Grade 5 - Zinc - FT - 1"	100007872
15	1	4	100007869	BOLT SHCS 1/2-13 X 1-3/4 SS	100007869
16	1	8	100007859	RIVET NUT 3/8-16 FLAT KNURLED	100007859
17	1	2	100007857	NUT FINGER 1/2-13 BRASS	100007857
18	1	4	100007744	Hex Bolt 1/2-13 UNC ZINC - PT - 3"	100007744
19	1	2	100007729	HEX NUT SLOTTED CASTLE HEAD 1/2-13 SS	100007729
20	1	2	100007492	HEX NUT NYLOCK - 1/2-13 UNC - GR5 - ZINC	100007492
21	1	1	100007391	NAME PLATE STEEL - BLANK	100007391
22	1	4	100003823	Hex Bolt 1/2-13 UNC ZINC - PT - 1.5"	100003823
23	1	2	100007670	SPRING MOUNT ASSY .438	100007670
25	1	2	100007661	Hinge Assembly, Left, 9/16, Steel	100007661
26	1	2	100007658	Hinge Assembly, Right, 7/16, Steel	100007658
27	1	2	100007682	OFFSET SPRING MOUNT .562	100007682
28	1	2	100011407	GR5 HEX BOLT - 1/2-13 UNC - 2.25 - DRILLED	100011407
29	1	2	100007896	TORSION HEX ROD 9/16 X 36 RAW	100007896
30	8.000 in	8.000 in	100020755	ROD STL ALL-THREAD 5/8-11 UNC PLAIN	100020755
31	1	2	100033655	HEX NUT NYLOCK - 5/8-11 UNC - GR8 - ZINC	100033655
32	1	2	100007760	HEX NUT 5/8-11 UNC ZINC-PLATED	100007760
33	1	2	100007933	SAFETY LATCH ASSY FOR UNI AND 90 D HINGE	100007933
24	36.000 in	72.000 in	100007726	TORSION HEX ROD .4375 x 36in RAW	200072483

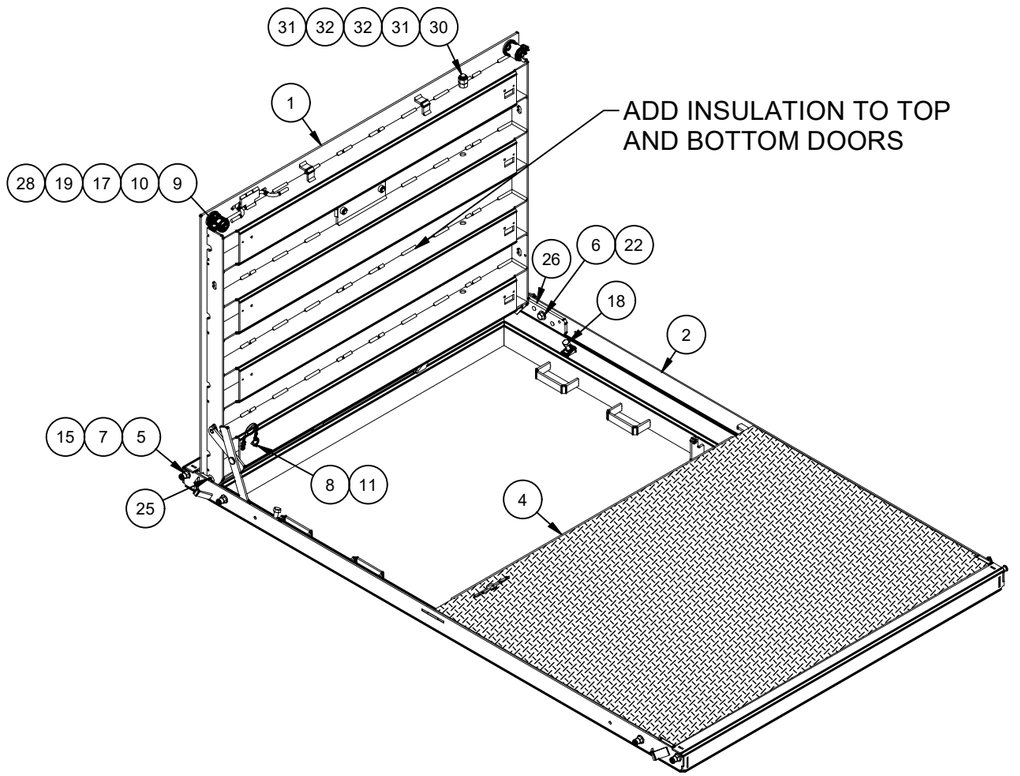

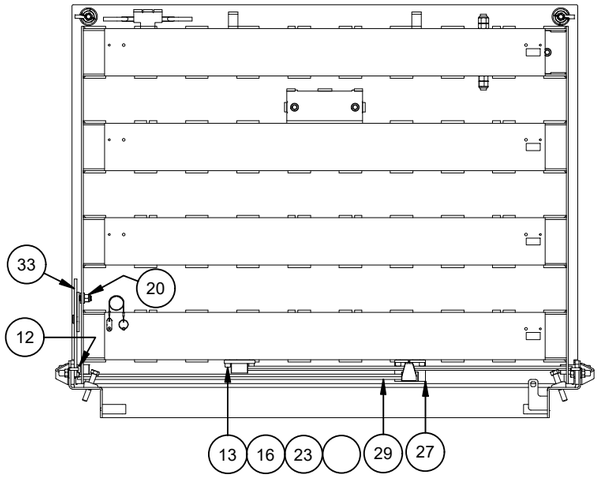

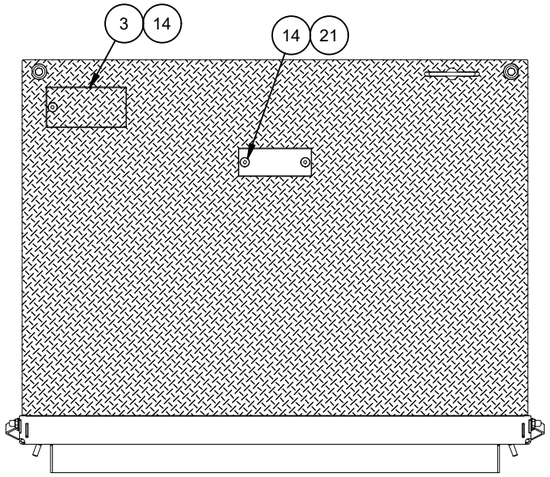

REVISION HISTORY		
DESCRIPTION	DATE	REVISED BY
59752-11 MADE WELDS/CHANNELS MATCH ROBOT DOOR 100002389; REVISED LOCKBOX TO PASS CALCS; SWAPPED CAM LATCH CATCH PLATE	2/16/2026	R. DOHR
56290-4: CLEANED UP MODEL. UPDATED WELDS. CLEANED UP SHOP DRAWINGS AND REPLACED REQUESTED PARTS. 100007659 TO 100007661, 100007660 TO 100007658 AND 100007671 TO 100007670.	6/17/2025	COLLIN HEYWOOD
ADDED MISSING ITEMS TO BURN LIST, RAN ALL CALCS, BROUGHT DRAWING TO NEW STANDARDS	9/13/2023	D. Parlee

MATERIAL FINISH: Galvanized

MATERIAL SURFACE: Diamond Plate

Infrastructure JENSEN

527 Dunn Circle, Sparks, NV 89431
775-352-2716 FAX: 755-358-8127
JENSENMETALTECH.COM

©2026 Jensen Infrastructure - All rights reserved.
All materials appearing as Jensen Infrastructure documents and the like are proprietary work product and are protected under U.S. copyright and other laws. Unless in conjunction with business conducted with Jensen Infrastructure , any use of Jensen Infrastructure work product without express, written consent is prohibited, and recipient is prohibited from distributing any and all work product to non-approved third parties under penalty of civil action.
This product shall only be produced in a Jensen Infrastructure facility.

PART NUMBER & DESCRIPTION: 100008794 — CAS2-4878-AH4-DP-G-IN-LL-SP-TMWA-OH06

REV: D-2-1

WEIGHT: 758.97 Lbs

DRAWN BY: R. Dohr

SHEET: 2

CREATED: 12/17/2019

MODIFIED: 2/16/2026

100008794.idw

BURN LIST - BOM

PART NAME	PART NUMBER	ITEM QTY	DESCRIPTION	STOCK NUMBER	MATERIAL	MASS	SHEET
200033717	100007821	8	Door Component Steel Channel Lockbox	100007821	SHT STL GR80 SM-HRPO RAW .1875	27.165 lbmass	09
200033718	100007736	1	Door Component Steel Plate, Bottom	100007736	SHT STL CQ DP RAW .25 - 36 KSI YIELD	166.426 lbmass	10
200033719	100007821	4	Door Component Steel Side Bar	100007821	SHT STL GR80 SM-HRPO RAW .1875	4.829 lbmass	11
200033721	100007734	2	Frame Component Steel Frame Side, Adjustable Ladder Loops,Lockbox	100007734	STL ASTM A36 SM-HRPO 60X120 RAW .1875	38.631 lbmass	12
200033722	100007734	2	Frame Component Steel Frame End, Adjustable	100007734	STL ASTM A36 SM-HRPO 60X120 RAW .1875	28.583 lbmass	13
200033724	100007736	1	Door Component Steel Plate, Top Lockbox,Nameplate	100007736	SHT STL CQ DP RAW .25 - 36 KSI YIELD	161.442 lbmass	14
200036210	100007735	1	Frame Component Steel Lock Box Tang. Lockbox	100007735	STL ASTM A36 SM-HRPO RAW .250	0.335 lbmass	15
200064973	100007736	1	Door Component Steel Lock Box Bolting Plate	100007736	SHT STL CQ DP RAW .25 - 36 KSI YIELD	2.661 lbmass	16
200064977	100007735	1	LOCKBOX HINGE	100007735	STL ASTM A36 SM-HRPO RAW .250	0.688 lbmass	17
200087252	100007735	1	Door Component Steel Lap Bar 48in, 2.5" Stiffener Offset	100007735	STL ASTM A36 SM-HRPO RAW .250	6.293 lbmass	18
200091824	100007735	1	NAME PLATE BACKING PLATE	100007735	STL ASTM A36 SM-HRPO RAW .250	1.876 lbmass	19
200112827	100007735	1	LOCK BOX DAPPED END BOLT DOWN PLATE	100007735	STL ASTM A36 SM-HRPO RAW .250	0.789 lbmass	20
200072483	100007726	2	TORSION HEX ROD .4375 x 36in RAW	100007726	Steel	1.692 lbmass	

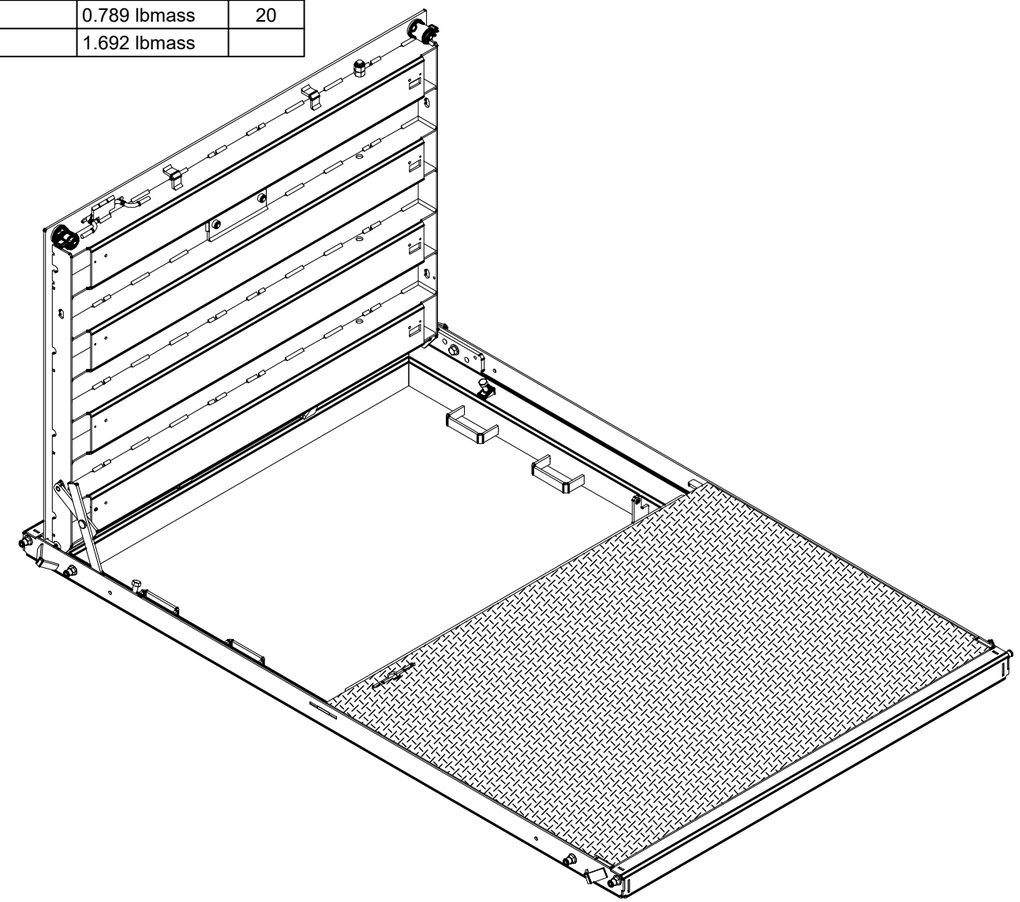

100008794.idw

MATERIAL FINISH: Galvanized

MATERIAL SURFACE: Diamond Plate

Infrastructure JENSEN
527 Dunn Circle, Sparks, NV 89431
775-352-2716 FAX: 755-358-8127
JENSENMETALTECH.COM

©2026 Jensen Infrastructure - All rights reserved.
All materials appearing as Jensen Infrastructure documents and the like are proprietary work product and are protected under U.S. copyright and other laws. Unless in conjunction with business conducted with Jensen Infrastructure , any use of Jensen Infrastructure work product without express, written consent is prohibited, and recipient is prohibited from distributing any and all work product to non-approved third parties under penalty of civil action.
This product shall only be produced in a Jensen Infrastructure facility.

PART NUMBER & DESCRIPTION: 100008794 CAS2-4878-AH4-DP-G-IN-LL-SP-TMWA-OH06

REV: D-2-1

WEIGHT: 758.97 Lbs

DRAWN BY: R. Dohr

CREATED: 12/17/2019

MODIFIED: 2/16/2026

SHEET: 3

CUT LIST - BOM

PART NAME	ITEM QTY	BASE QTY	QTY	DESCRIPTION	PART NUMBER	MASS	SHEET
100020755	1	8.0000 in	8.000 in	ROD STL ALL-THREAD 5/8-11 UNC PLAIN	100020755	1.0000 lbmass	
200072483	2	36 in	72.000 in	TORSION HEX ROD .4375 x 36in RAW	100007726	1.692 lbmass	

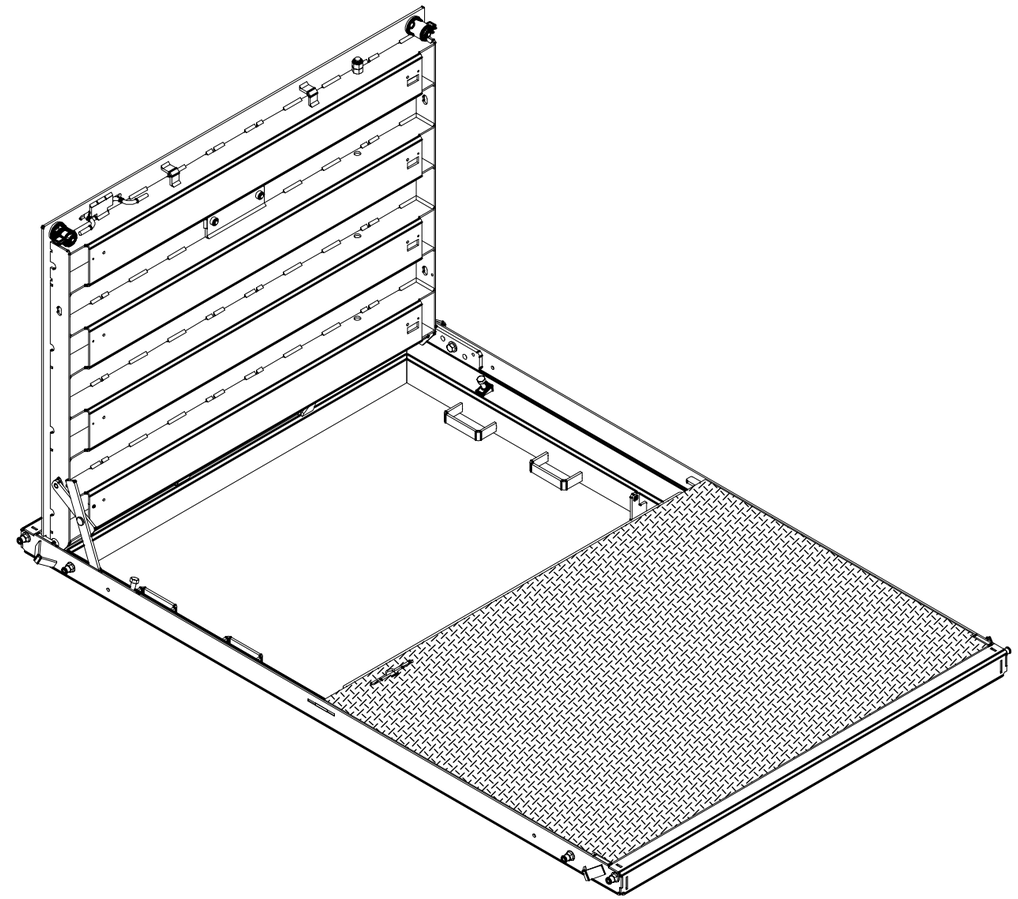

100008794.idw

MATERIAL FINISH: Galvanized

MATERIAL SURFACE: Diamond Plate

Infrastructure
JENSEN

527 Dunn Circle, Sparks, NV 89431
775-352-2716 FAX: 755-358-8127
JENSENMETALTECH.COM

©2026 Jensen Infrastructure - All rights reserved.
All materials appearing as Jensen Infrastructure documents and the like are proprietary work product and are protected under U.S. copyright and other laws. Unless in conjunction with business conducted with Jensen Infrastructure , any use of Jensen Infrastructure work product without express, written consent is prohibited, and recipient is prohibited from distributing any and all work product to non-approved third parties under penalty of civil action.
This product shall only be produced in a Jensen Infrastructure facility.

PART NUMBER & DESCRIPTION: 100008794
CAS2-4878-AH4-DP-G-IN-LL-SP-TMWA-OH06

REV: D-2-1

WEIGHT: 758.97 Lbs

DRAWN BY: R. Dohr

CREATED: 12/17/2019

MODIFIED: 2/16/2026

SHEET: 4

BILL OF MATERIALS

ITEM	ITEM QTY	PART NUMBER	DESCRIPTION	PART NAME
1	1	100007736	Door Component Steel Plate, Top Lockbox,Nameplate	200033724
2	4	100007821	Door Component Steel Channel Lockbox	200033717
3	2	100007821	Door Component Steel Side Bar	200033719
4	1	100007735	NAME PLATE BACKING PLATE	200091824
5	1	100007735	LOCK BOX DAPPED END BOLT DOWN PLATE	200112827
6	1	100007644	LEAF PULL HANDLE A36 3/8IN DIAMETER	100007644
7	2	100007647	LIFTING BRACKET STEEL LEAF	100007647
8	1	100007646	HANDLE RETAINER STL	100007646
9	2	100007970	CAM TOWER CAST STEEL	100007970
10	3	100007728	NUT SELF-CLINCH 1/2-13 S-0813-1 RAW	100007728

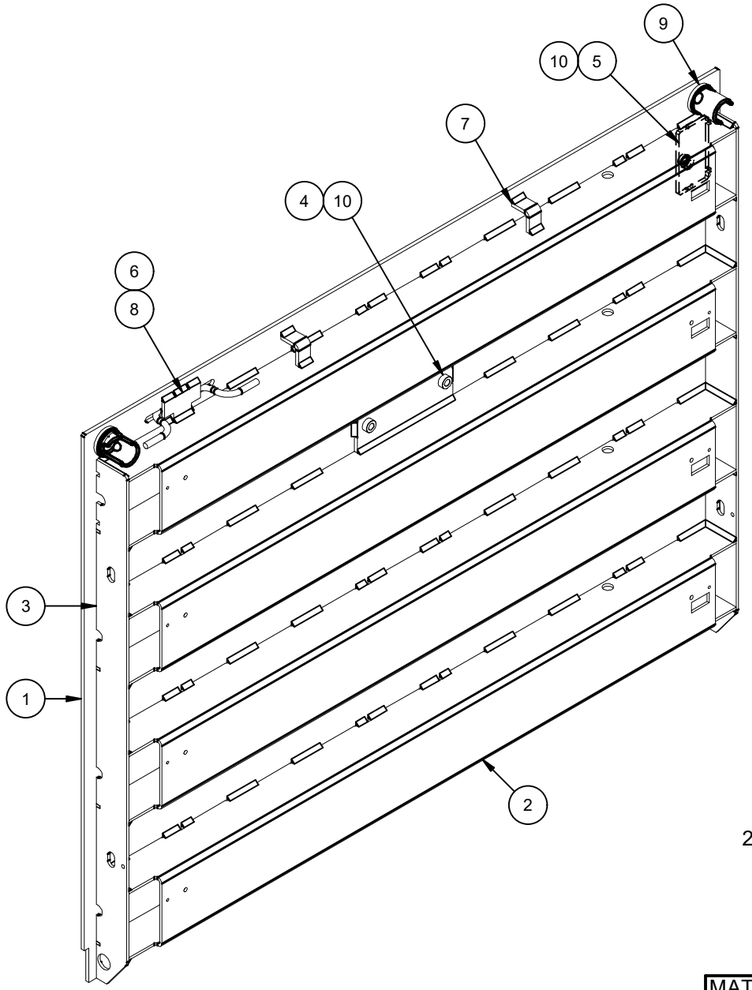

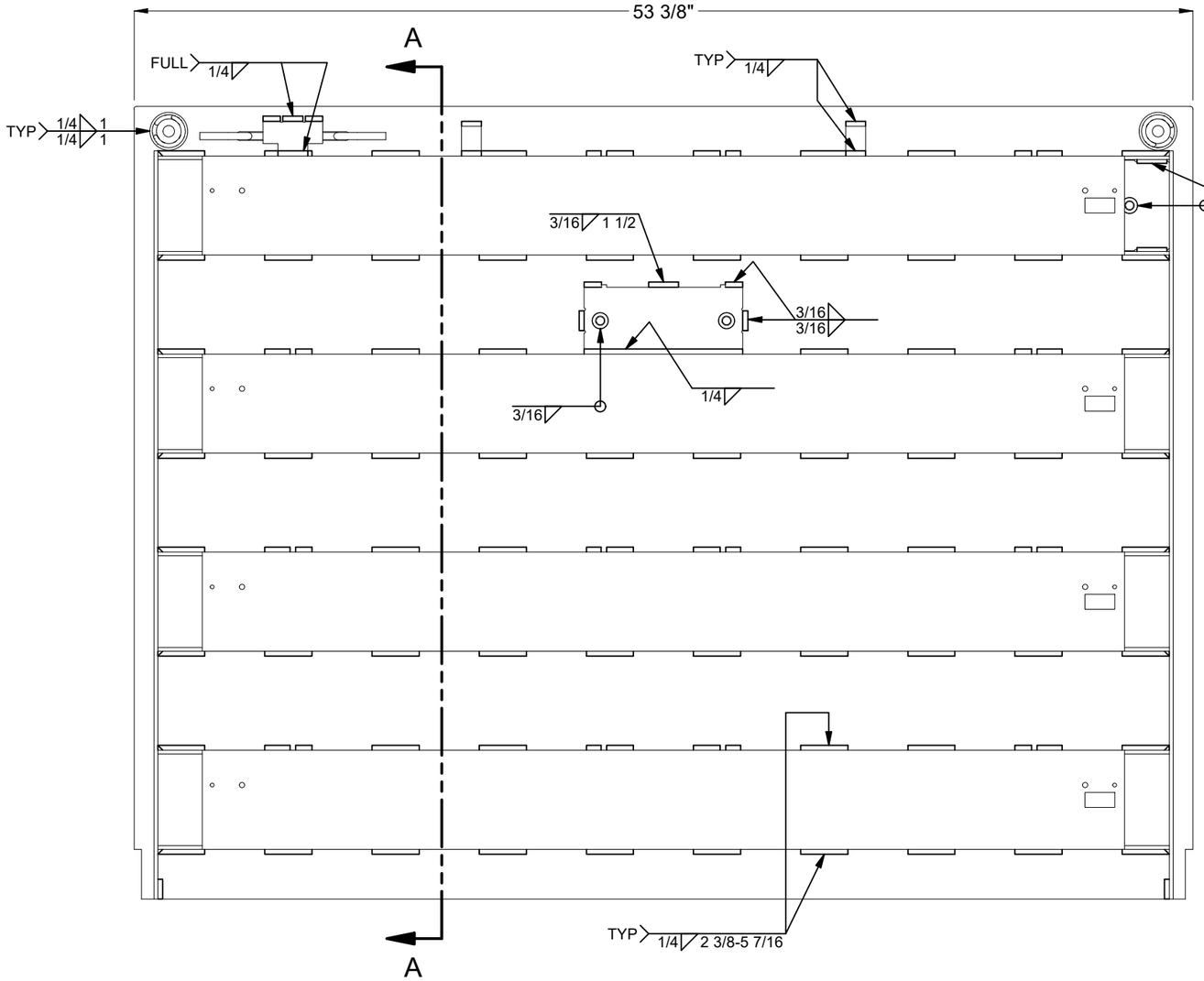

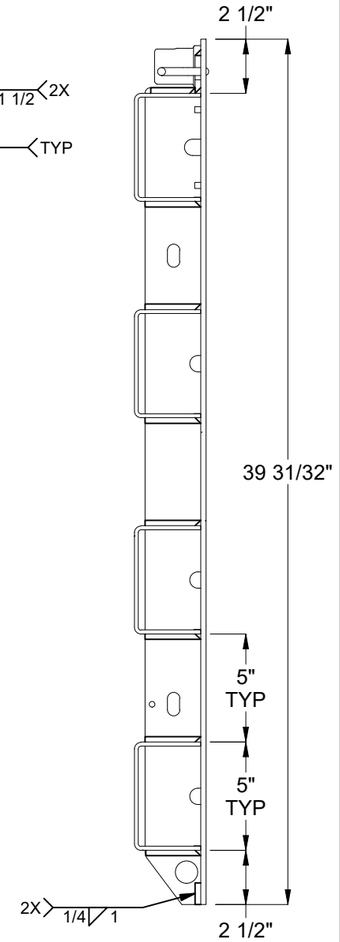

SECTION A-A

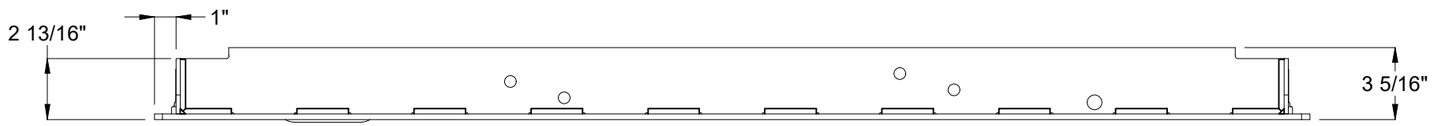

MATERIAL FINISH: Raw	Infrastructure JENSEN 527 Dunn Circle, Sparks, NV 89431 775-352-2716 FAX: 755-358-8127 *JENSENMETALTECH.COM*	©2026 Jensen Infrastructure - All rights reserved. All materials appearing as Jensen Infrastructure documents and the like are proprietary work product and are protected under U.S. copyright and other laws. Unless in conjunction with business conducted with Jensen Infrastructure , any use of Jensen Infrastructure work product without express, written consent is prohibited, and recipient is prohibited from distributing any and all work product to non-approved third parties under penalty of civil action. This product shall only be produced in a Jensen Infrastructure facility.	PART NUMBER & DESCRIPTION: 200033723 DAS2-T-4878-H4-DP-R-CL-LB-IN-TMWA	REV: D-2-1
MATERIAL SURFACE: Diamond Plate			WEIGHT: 286.67 Lbs CREATED: 12/17/2019	DRAWN BY: R. Dohr MODIFIED: 2/16/2026	SHEET: 5

100008794.idw

BILL OF MATERIALS

ITEM	ITEM QTY	PART NUMBER	DESCRIPTION	PART NAME
1	1	100007736	Door Component Steel Plate, Bottom	200033718
2	4	100007821	Door Component Steel Channel Lockbox	200033717
3	2	100007821	Door Component Steel Side Bar	200033719
4	1	100007735	Door Component Steel Lap Bar 48in, 2.5" Stiffener Offset	200087252
5	1	100007644	LEAF PULL HANDLE A36 3/8IN DIAMETER	100007644
6	2	100007647	LIFTING BRACKET STEEL LEAF	100007647

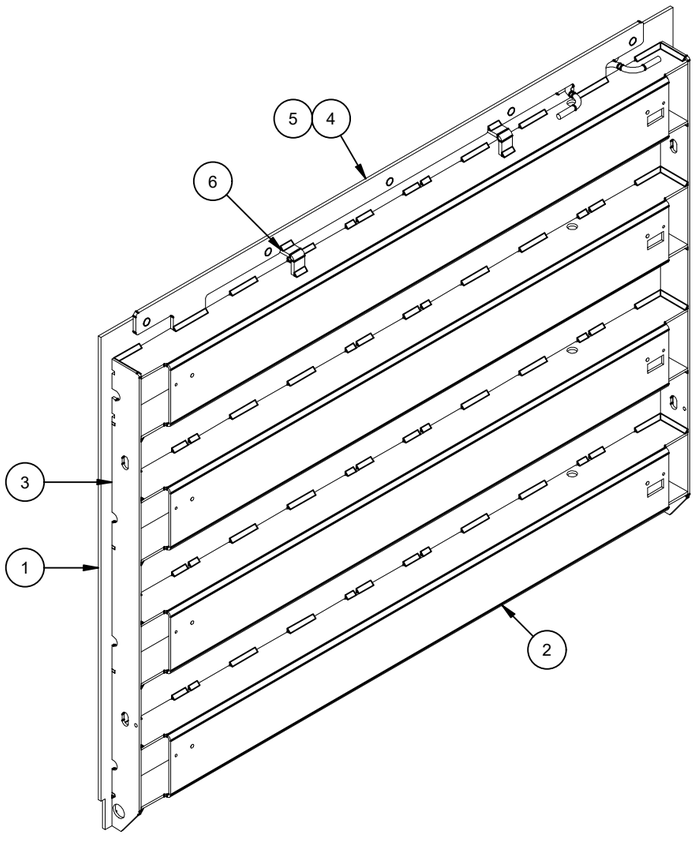

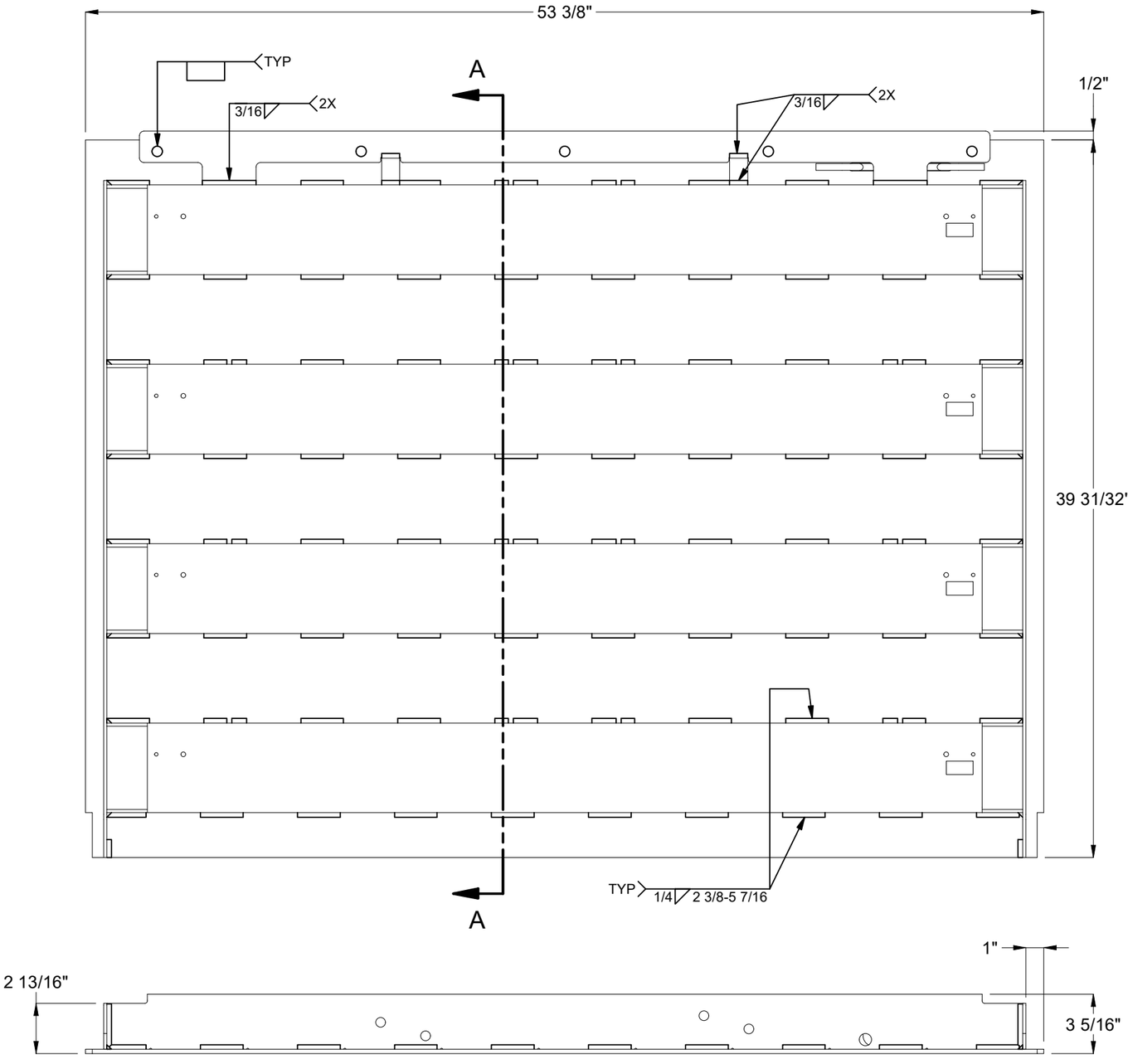

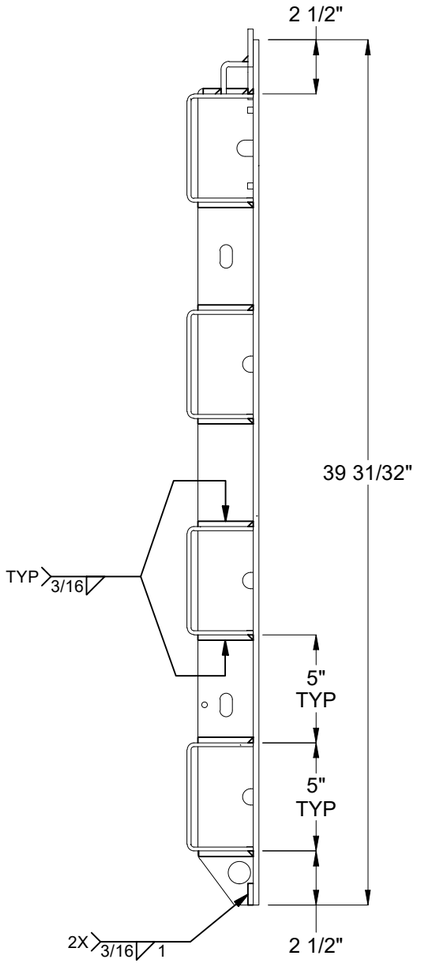

SECTION A-A

100008794.idw

MATERIAL FINISH: Raw	Infrastructure JENSEN 527 Dunn Circle, Sparks, NV 89431 775-352-2716 FAX: 755-358-8127 *JENSENMETALTECH.COM*	©2026 Jensen Infrastructure - All rights reserved. All materials appearing as Jensen Infrastructure documents and the like are proprietary work product and are protected under U.S. copyright and other laws. Unless in conjunction with business conducted with Jensen Infrastructure , any use of Jensen Infrastructure work product without express, written consent is prohibited, and recipient is prohibited from distributing any and all work product to non-approved third parties under penalty of civil action. This product shall only be produced in a Jensen Infrastructure facility.	PART NUMBER & DESCRIPTION: 200033715 DAS2-B-4878-H4-DP-R-IN-LB-TMWA		REV: D-2-1
MATERIAL SURFACE: Diamond Plate			WEIGHT: 295.61 Lbs	DRAWN BY: R. Dohr	SHEET: 6
			CREATED: 12/17/2019	MODIFIED: 2/16/2026	

BILL OF MATERIALS

ITEM	ITEM QTY	PART NUMBER	DESCRIPTION	PART NAME
1	2	100007734	Frame Component Steel Frame Side, Adjustable Ladder Loops,Lockbox	200033721
2	2	100007734	Frame Component Steel Frame End, Adjustable	200033722
3	1	100007735	Frame Component Steel Lock Box Tang. Lockbox	200036210
4	4	200018691	FRAME BOLT DOUBLER SLOT	200018691
5	2	200100755	Frame Cam Latch Catch Plate - 1/4" A36, Dual Door, 0.8125" Overhang	200100755
6	4	100007641	FRAME LIFTING BRACKET	100007641
7	4	100007863	NUT LEVELER 1/2-13 WELDABLE CAST STEEL	100007863
8	8	100007683	LADDER LOOP	100007683

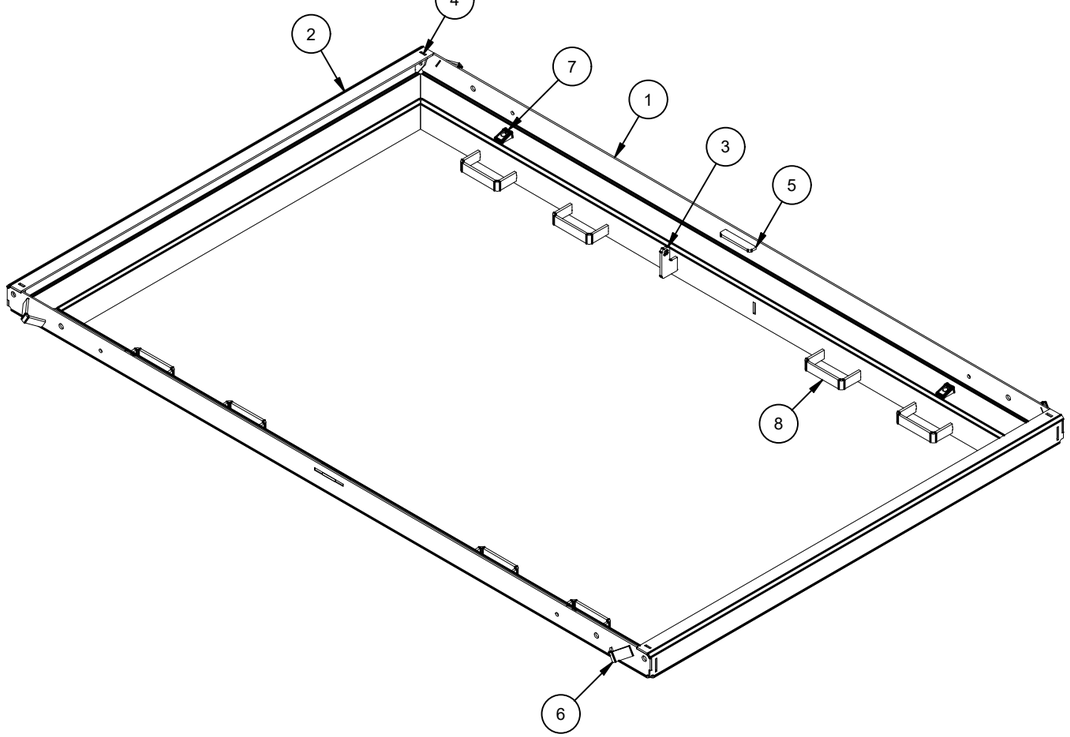

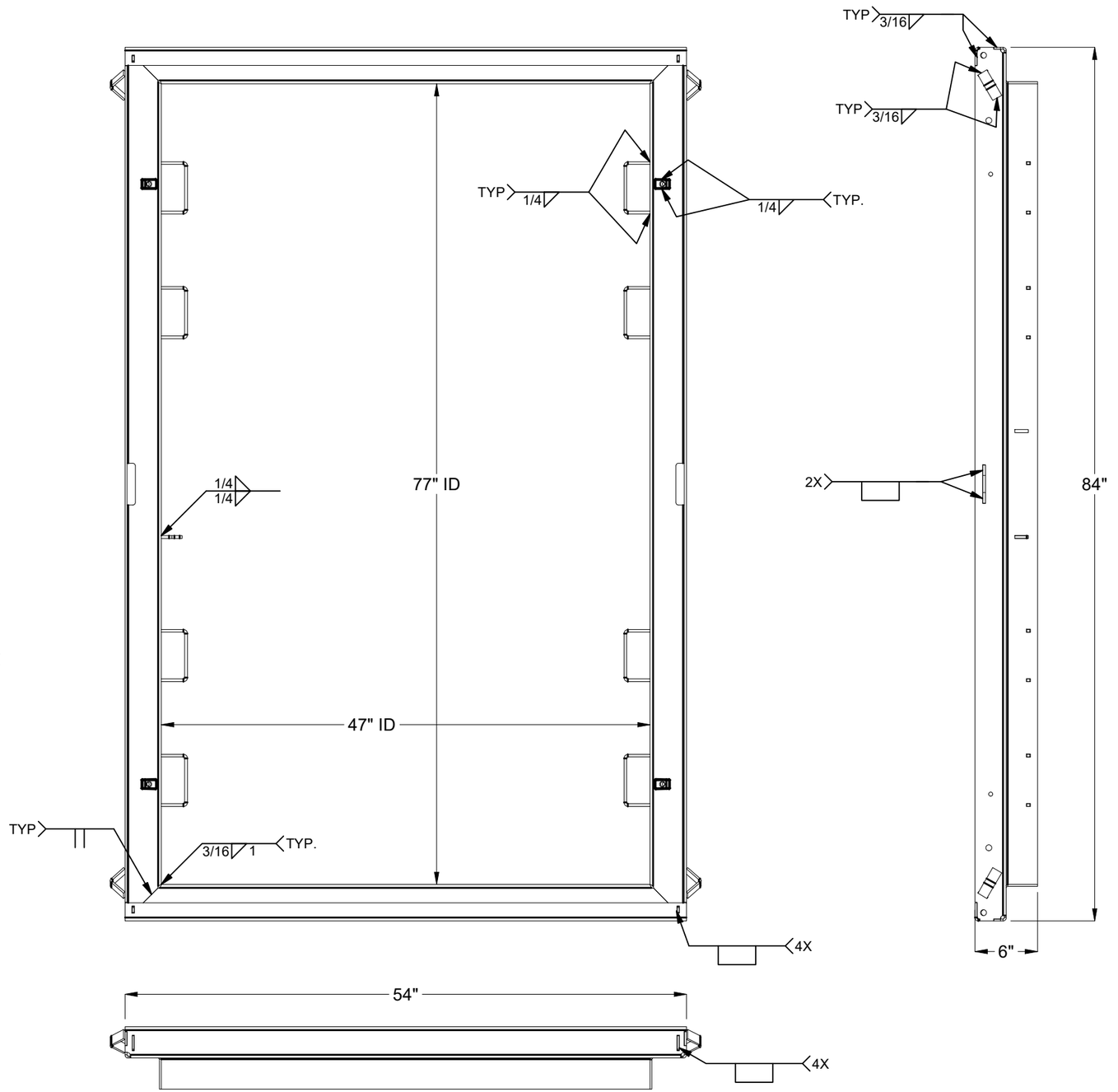

100008794.idw

MATERIAL FINISH: Raw	Infrastructure JENSEN 527 Dunn Circle, Sparks, NV 89431 775-352-2716 FAX: 755-358-8127 *JENSENMETALTECH.COM*	©2026 Jensen Infrastructure - All rights reserved. All materials appearing as Jensen Infrastructure documents and the like are proprietary work product and are protected under U.S. copyright and other laws. Unless in conjunction with business conducted with Jensen Infrastructure , any use of Jensen Infrastructure work product without express, written consent is prohibited, and recipient is prohibited from distributing any and all work product to non-approved third parties under penalty of civil action. This product shall only be produced in a Jensen Infrastructure facility.	PART NUMBER & DESCRIPTION: 200033720 FAS-4878-AH4-R-LL-LB-TMWA-OH06
MATERIAL SURFACE: Smooth			WEIGHT: 140 Lbs / DRAWN BY: R. Dohr / CREATED: 12/17/2019 / MODIFIED: 2/16/2026

REV: D-2-1

SHEET: 7

BILL OF MATERIALS

ITEM	UNIT QTY	QTY	PART NUMBER	DESCRIPTION	PART NAME
1	2.661 lbmass	2.661 lbmass	100007736	Door Component Steel Lock Box Bolting Plate	200064973
2	0.688 lbmass	0.688 lbmass	100007735	LOCKBOX HINGE	200064977

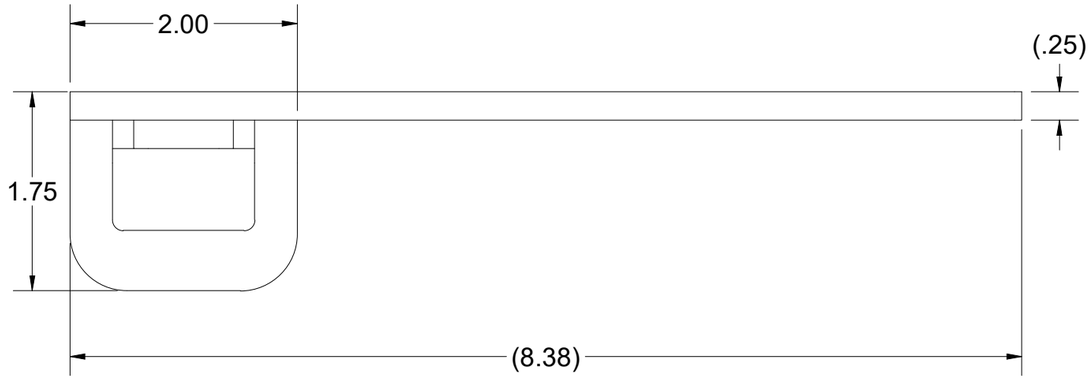

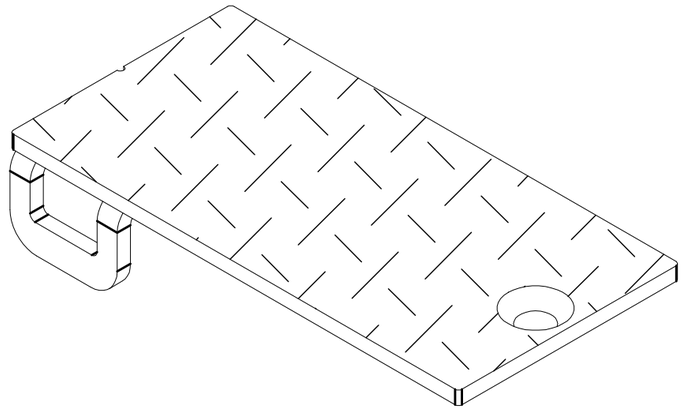

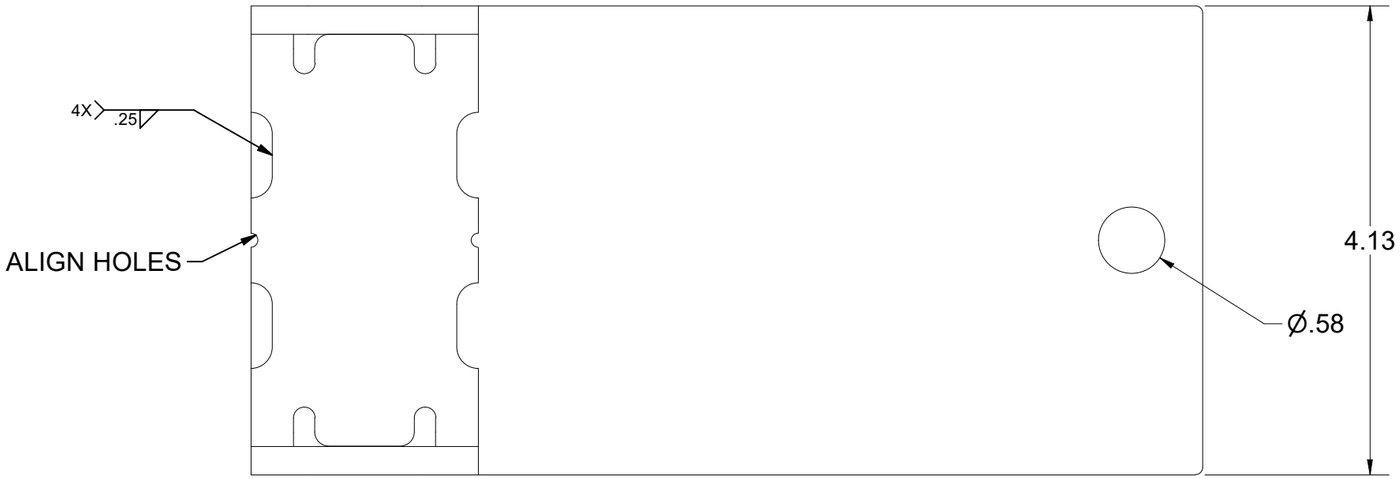

100008794.idw

MATERIAL FINISH:	Infrastructure JENSEN 527 Dunn Circle, Sparks, NV 89431 775-352-2716 FAX: 755-358-8127 *JENSENMETALTECH.COM*	PART NUMBER & DESCRIPTION: 200064972 1/4" DP LOCK BOX LID ASSY	REV: D-2-1
MATERIAL SURFACE:		WEIGHT: 3.1 Lbs DRAWN BY: R. Dohr	SHEET: 8
		CREATED: 12/17/2019 MODIFIED: 2/16/2026	

©2026 Jensen Infrastructure - All rights reserved.
All materials appearing as Jensen Infrastructure documents and the like are proprietary work product and are protected under U.S. copyright and other laws. Unless in conjunction with business conducted with Jensen Infrastructure , any use of Jensen Infrastructure work product without express, written consent is prohibited, and recipient is prohibited from distributing any and all work product to non-approved third parties under penalty of civil action.
This product shall only be produced in a Jensen Infrastructure facility.

NON-SYMMETRIC

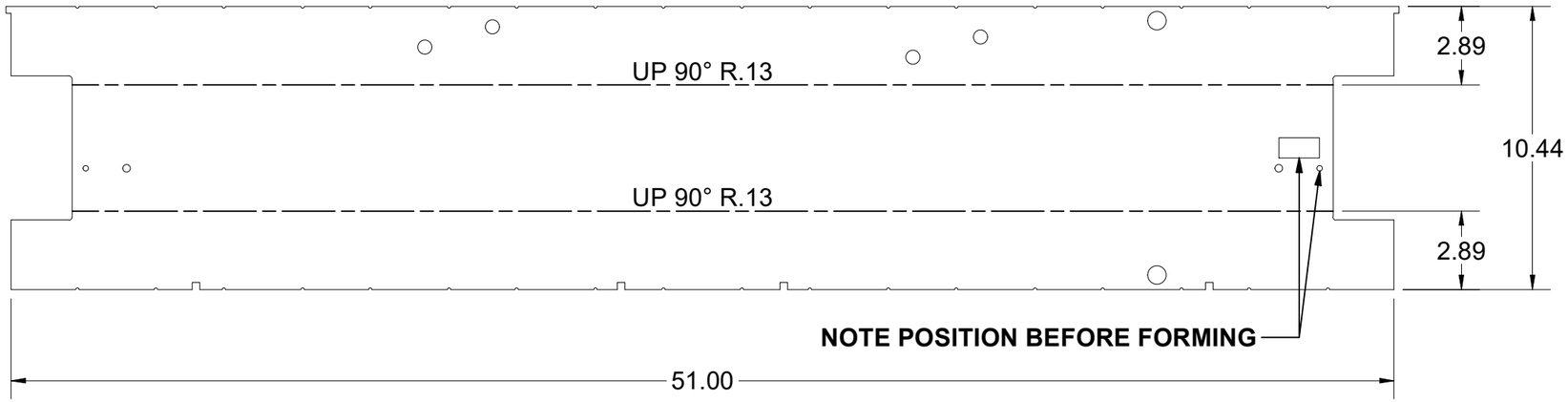

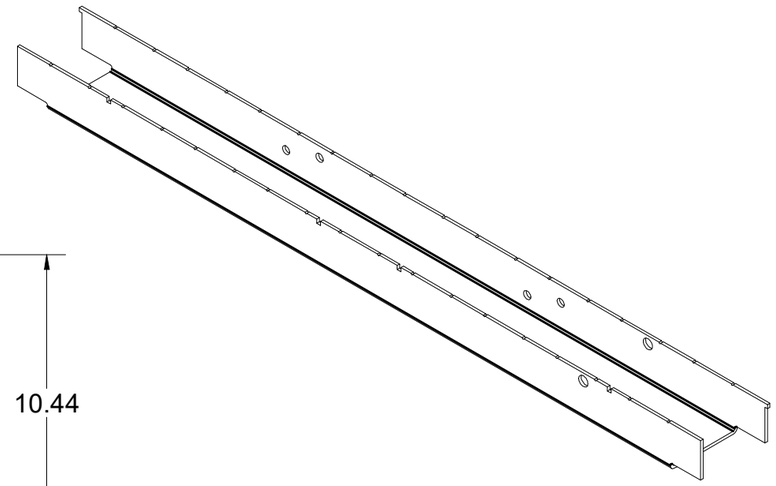

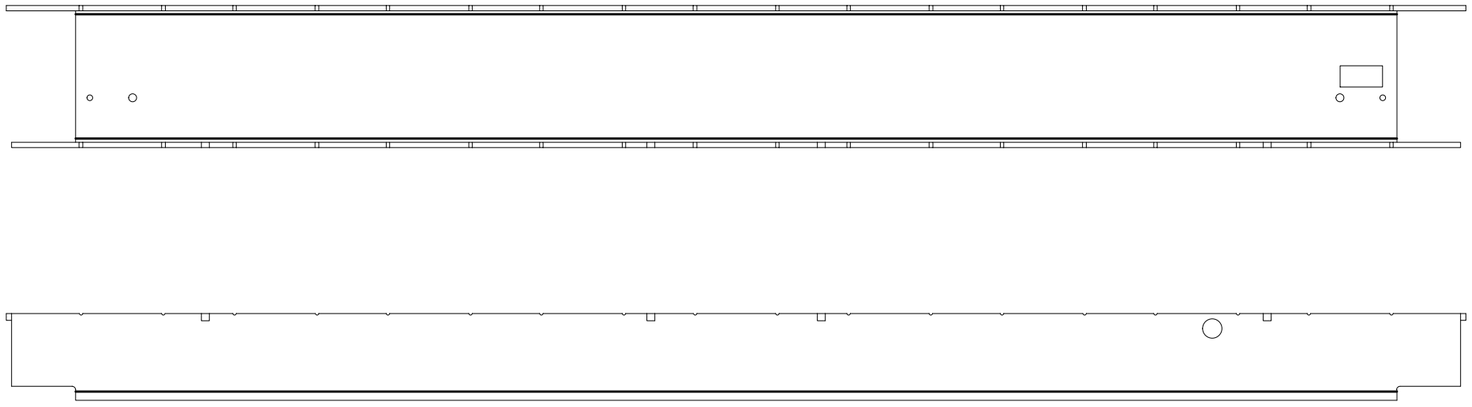

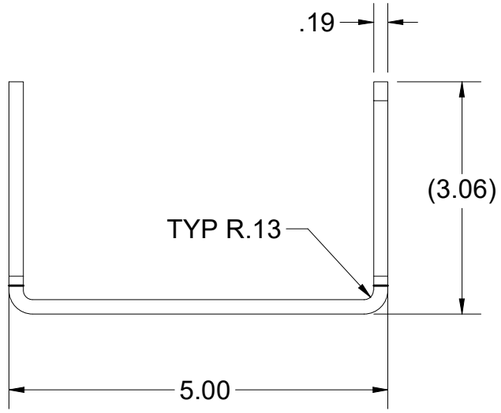

BEND TABLE			
BEND RADIUS	V-OPENING	BEND ANGLE	BEND DEDUCTION
0.125	2	90	0.345

MATERIAL IFS: 100007821

MATERIAL THK: 0.1875

MAT DESCRIPTION: SHT STL GR80 SM-HRPO RAW .1875

Infrastructure JENSEN

527 Dunn Circle, Sparks, NV 89431
775-352-2716 FAX: 755-358-8127
JENSENMETALTECH.COM

©2026 Jensen Infrastructure - All rights reserved.
All materials appearing as Jensen Infrastructure documents and the like are proprietary work product and are protected under U.S. copyright and other laws. Unless in conjunction with business conducted with Jensen Infrastructure , any use of Jensen Infrastructure work product without express, written consent is prohibited, and recipient is prohibited from distributing any and all work product to non-approved third parties under penalty of civil action.
This product shall only be produced in a Jensen Infrastructure facility.

NAME & DESCRIPTION: 200033717 Door Component Steel Channel Lockbox

REV: D-2-1

WEIGHT: 27.165 lbmass

DRAWN BY: R. Dohr

CREATED: 12/17/2019

MODIFIED: 2/16/2026

SHEET: 9 OF 20

100008794.idw

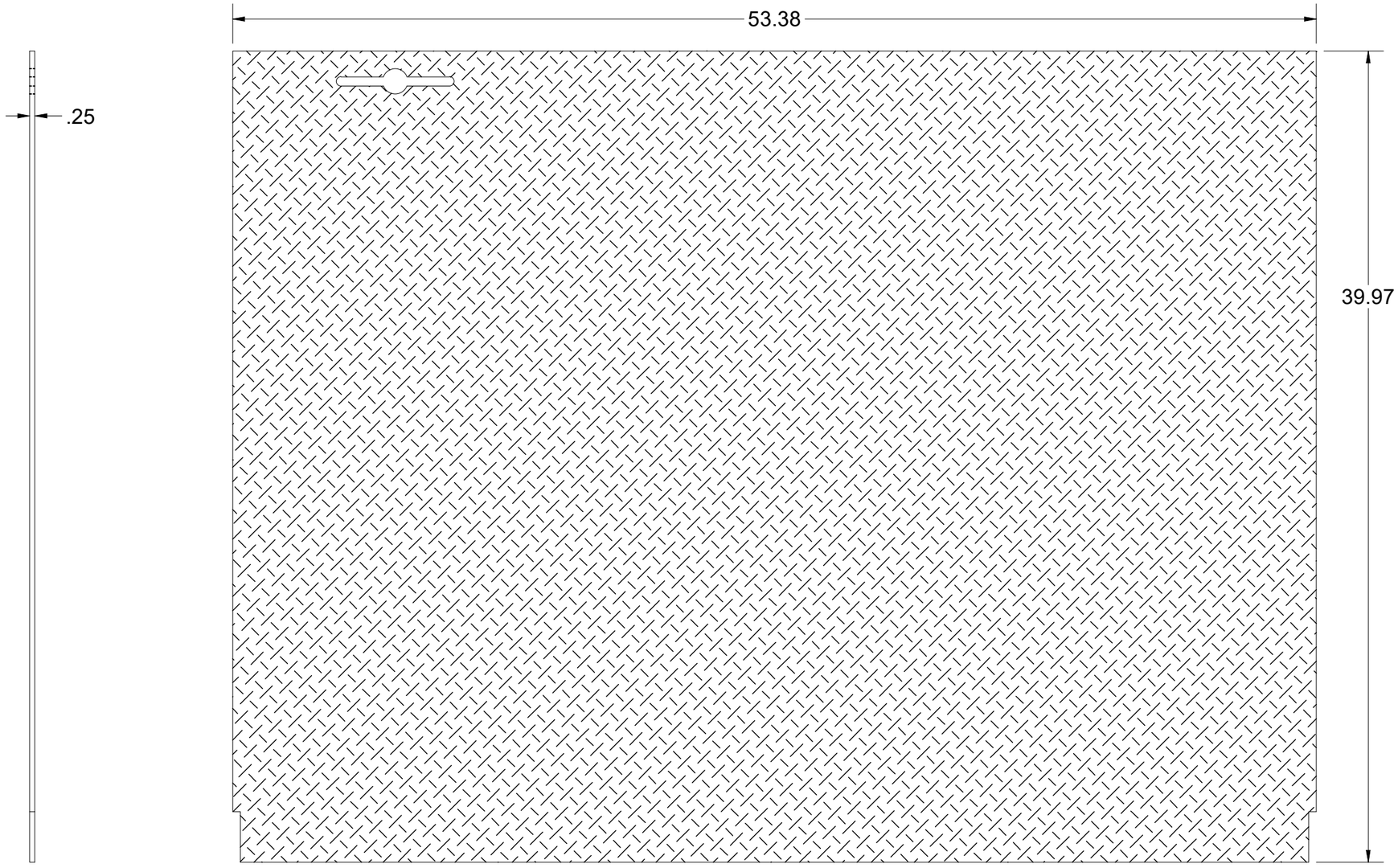

100008794.idw

BEND TABLE				MATERIAL IFS: 100007736
BEND RADIUS	V-OPENING	BEND ANGLE	BEND DEDUCTION	MATERIAL THK: 0.25
-	-	- 0	-	MAT DESCRIPTION: SHT STL CQ DP RAW .25 - 36 KSI YIELD

Infrastructure
JENSEN
527 Dunn Circle, Sparks, NV 89431
775-352-2716 FAX: 755-358-8127
JENSENMETALTECH.COM

©2026 Jensen Infrastructure - All rights reserved.
All materials appearing as Jensen Infrastructure documents and the like are proprietary work product and are protected under U.S. copyright and other laws. Unless in conjunction with business conducted with Jensen Infrastructure , any use of Jensen Infrastructure work product without express, written consent is prohibited, and recipient is prohibited from distributing any and all work product to non-approved third parties under penalty of civil action.
This product shall only be produced in a Jensen Infrastructure facility.

NAME & DESCRIPTION:		REV:
200033718 Door Component Steel Plate, Bottom		D-2-1
WEIGHT: 166.426 lbmass	DRAWN BY: R. Dohr	SHEET: 10 OF 20
CREATED: 12/17/2019	MODIFIED: 2/16/2026	

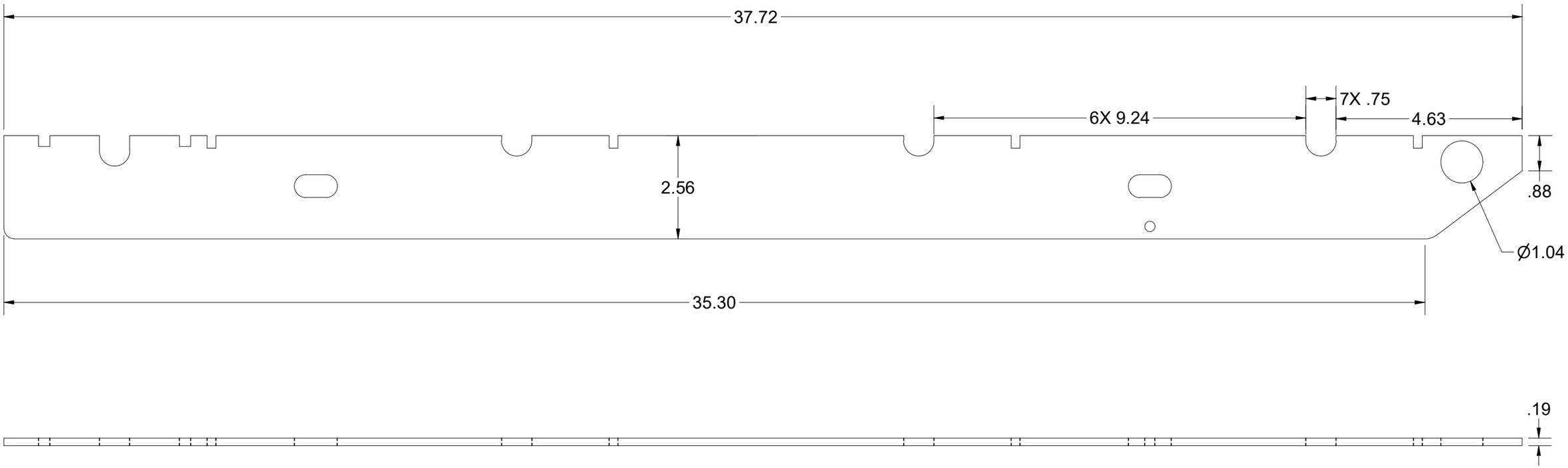

BEND TABLE				MATERIAL IFS: 100007821
BEND RADIUS	V-OPENING	BEND ANGLE	BEND DEDUCTION	MATERIAL THK: 0.1875
-	-	- 0	-	MAT DESCRIPTION: SHT STL GR80 SM-HRPO RAW .1875

Infrastructure
JENSEN
527 Dunn Circle, Sparks, NV 89431
775-352-2716 FAX: 755-358-8127
JENSENMETALTECH.COM

©2026 Jensen Infrastructure - All rights reserved.
All materials appearing as Jensen Infrastructure documents and the like are proprietary work product and are protected under U.S. copyright and other laws. Unless in conjunction with business conducted with Jensen Infrastructure , any use of Jensen Infrastructure work product without express, written consent is prohibited, and recipient is prohibited from distributing any and all work product to non-approved third parties under penalty of civil action.
This product shall only be produced in a Jensen Infrastructure facility.

NAME & DESCRIPTION: 200033719 Door Component Steel Side Bar		REV: D-2-1
WEIGHT: 4.829 lbmass	DRAWN BY: R. Dohr	SHEET: 11 OF 20
CREATED: 12/17/2019	MODIFIED: 2/16/2026	

100008794.idw

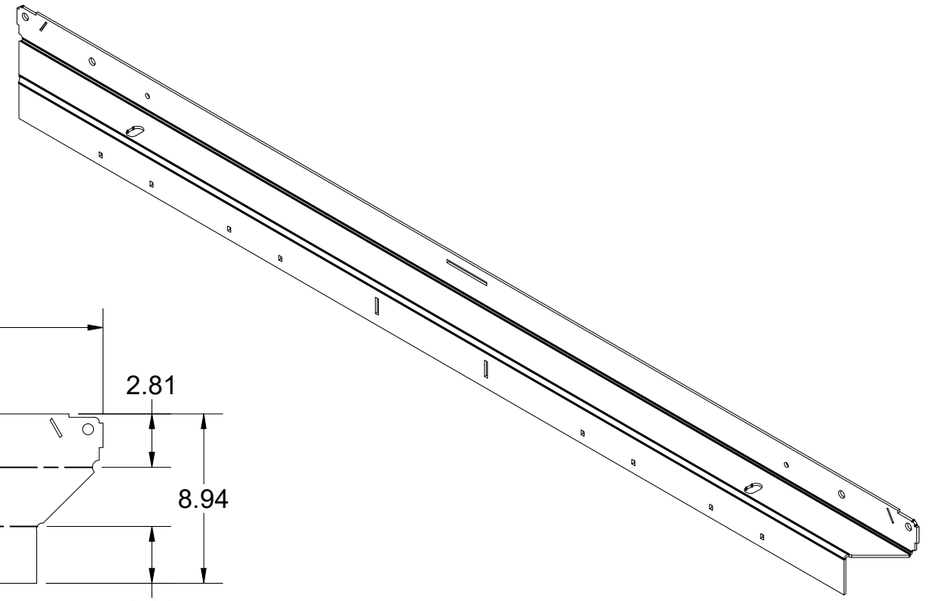

SYMMETRIC

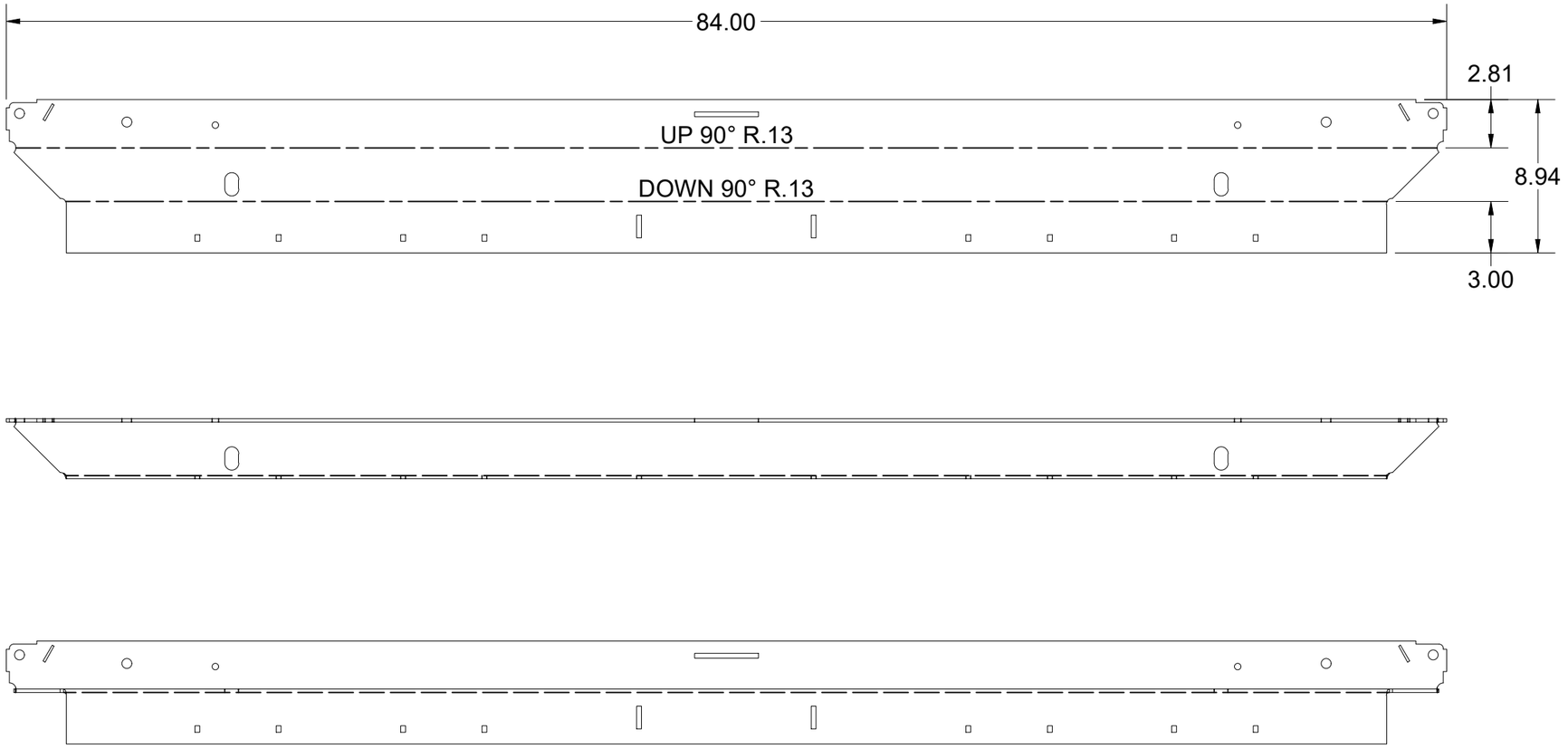

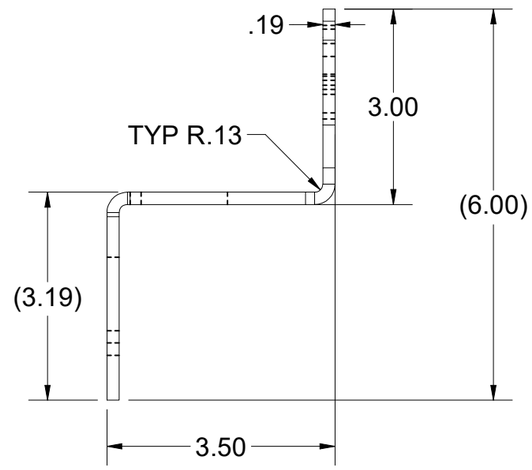

BEND TABLE				MATERIAL IFS: 100007734
BEND RADIUS	V-OPENING	BEND ANGLE	BEND DEDUCTION	MATERIAL THK: 0.1875
0.125	2	90	0.375	MAT DESCRIPTION: STL ASTM A36 SM-HRPO 60X120 RAW .1875

Infrastructure JENSEN
527 Dunn Circle, Sparks, NV 89431
775-352-2716 FAX: 755-358-8127
JENSENMETALTECH.COM

©2026 Jensen Infrastructure - All rights reserved.
All materials appearing as Jensen Infrastructure documents and the like are proprietary work product and are protected under U.S. copyright and other laws. Unless in conjunction with business conducted with Jensen Infrastructure , any use of Jensen Infrastructure work product without express, written consent is prohibited, and recipient is prohibited from distributing any and all work product to non-approved third parties under penalty of civil action.
This product shall only be produced in a Jensen Infrastructure facility.

NAME & DESCRIPTION: 200033721 Frame Component Steel Frame Side, Adjustable Ladder Loops,Lockbox		REV: D-2-1
WEIGHT: 38.631 lbmass	DRAWN BY: R. Dohr	SHEET: 12 OF 20
CREATED: 12/17/2019	MODIFIED: 2/16/2026	

100008794.idw

SYMMETRIC

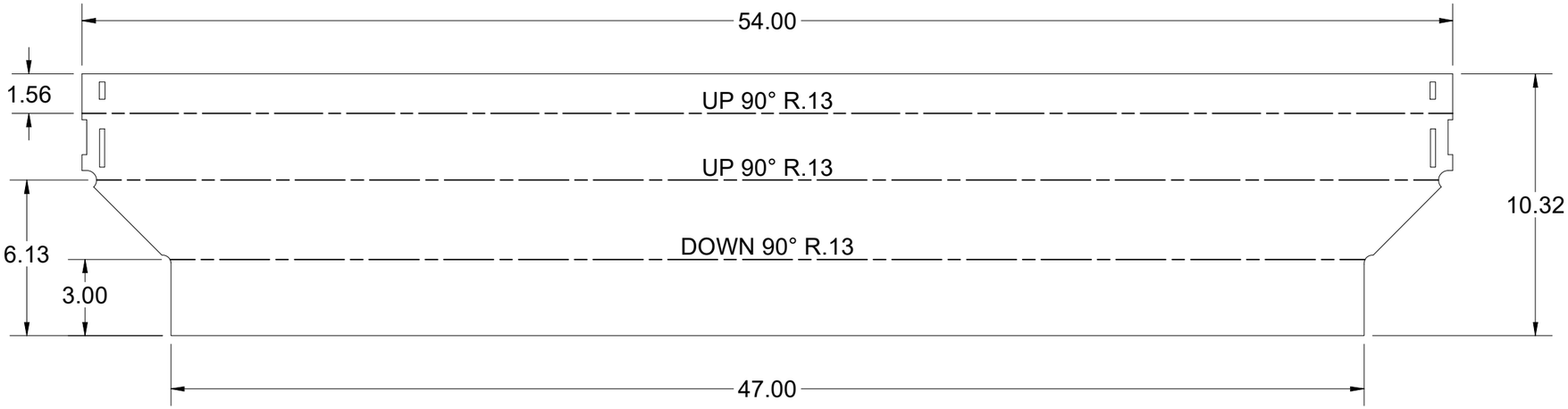

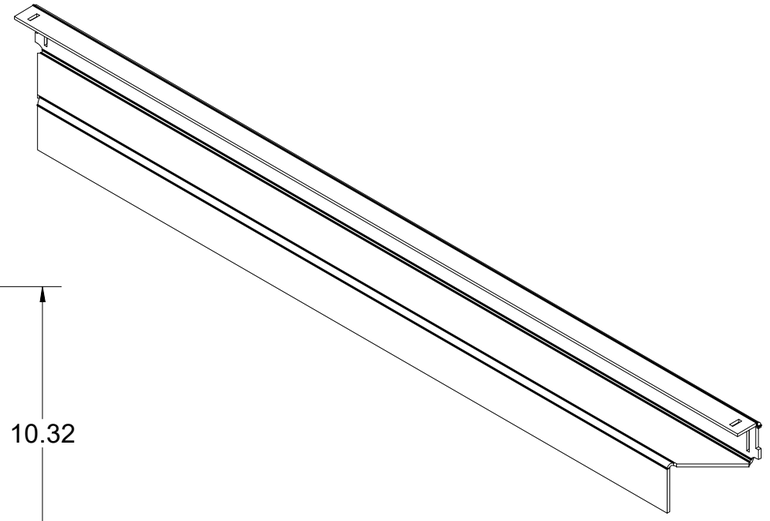

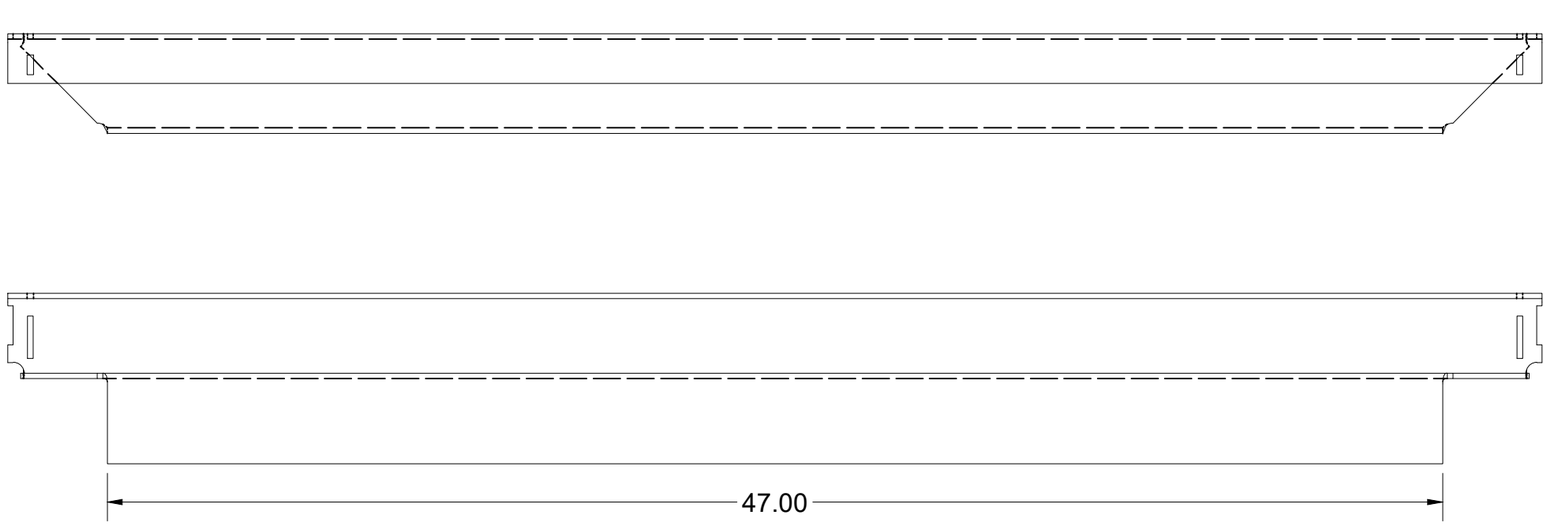

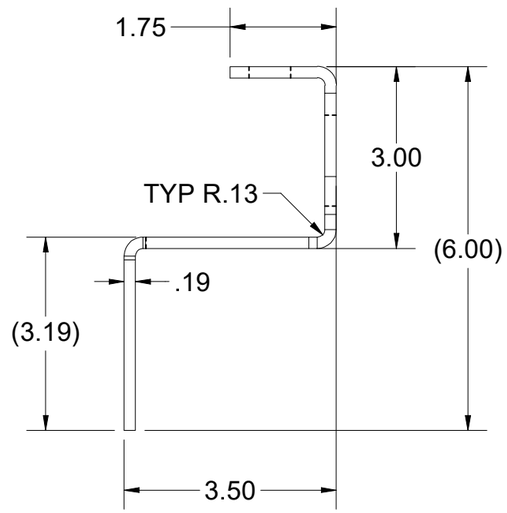

BEND TABLE				MATERIAL IFS: 100007734
BEND RADIUS	V-OPENING	BEND ANGLE	BEND DEDUCTION	MATERIAL THK: 0.1875
0.125	2	90	0.375	MAT DESCRIPTION: STL ASTM A36 SM-HRPO 60X120 RAW .1875

Infrastructure JENSEN
527 Dunn Circle, Sparks, NV 89431
775-352-2716 FAX: 755-358-8127
JENSENMETALTECH.COM

©2026 Jensen Infrastructure - All rights reserved. All materials appearing as Jensen Infrastructure documents and the like are proprietary work product and are protected under U.S. copyright and other laws. Unless in conjunction with business conducted with Jensen Infrastructure , any use of Jensen Infrastructure work product without express, written consent is prohibited, and recipient is prohibited from distributing any and all work product to non-approved third parties under penalty of civil action. This product shall only be produced in a Jensen Infrastructure facility.

NAME & DESCRIPTION: 200033722 Frame Component Steel Frame End, Adjustable		REV: D-2-1
WEIGHT: 28.583 lbmass	DRAWN BY: R. Dohr	SHEET: 13 OF 20
CREATED: 12/17/2019	MODIFIED: 2/16/2026	

100008794.idw

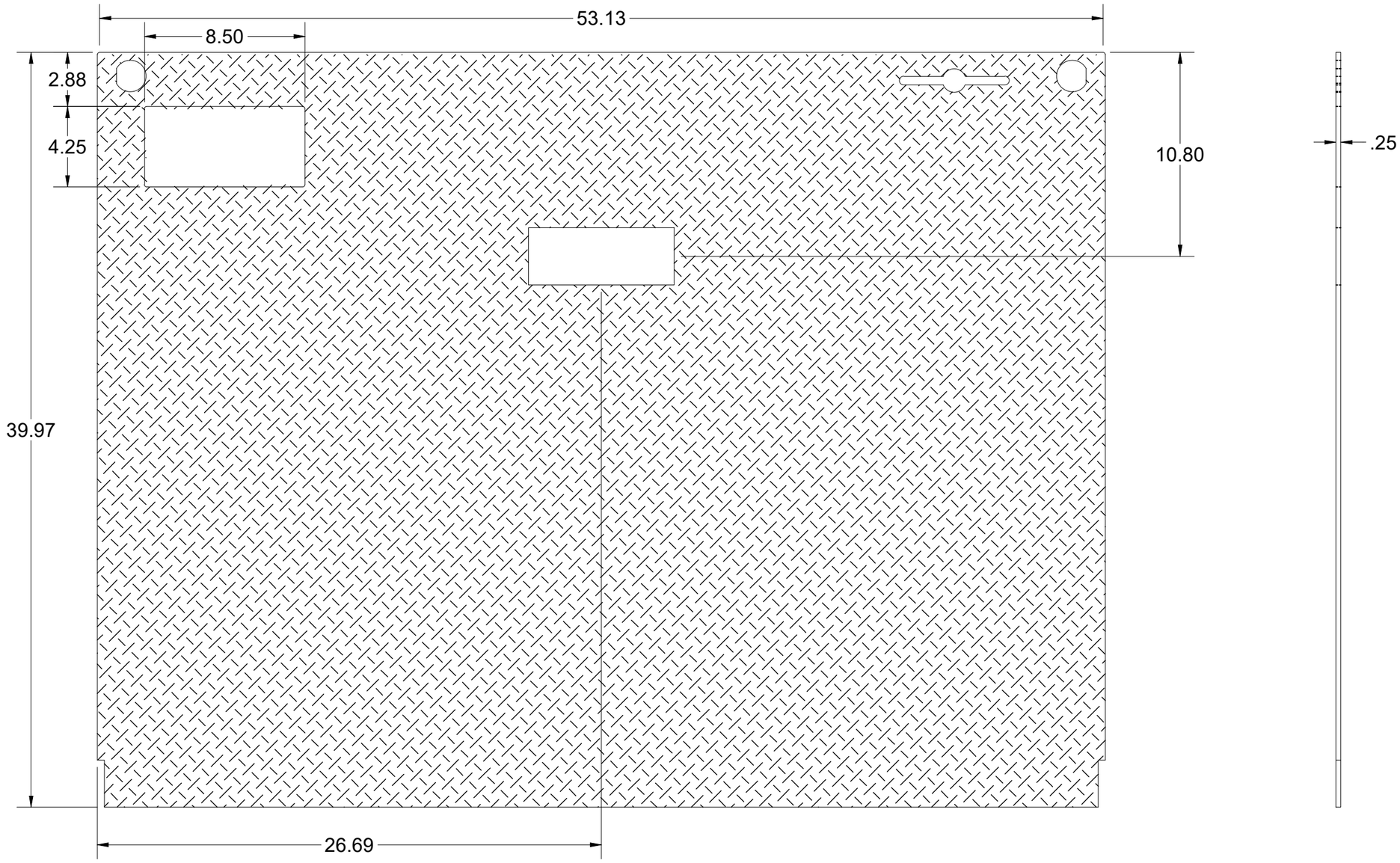

100008794.idw

BEND TABLE			
BEND RADIUS	V-OPENING	BEND ANGLE	BEND DEDUCTION
-	-	- 0	-

MATERIAL IFS: 100007736

MATERIAL THK: 0.25

MAT DESCRIPTION: SHT STL CQ DP RAW .25 - 36 KSI YIELD

Infrastructure
JENSEN
527 Dunn Circle, Sparks, NV 89431
775-352-2716 FAX: 755-358-8127
JENSENMETALTECH.COM

©2026 Jensen Infrastructure - All rights reserved.
All materials appearing as Jensen Infrastructure documents and the like are proprietary work product and are protected under U.S. copyright and other laws. Unless in conjunction with business conducted with Jensen Infrastructure , any use of Jensen Infrastructure work product without express, written consent is prohibited, and recipient is prohibited from distributing any and all work product to non-approved third parties under penalty of civil action.
This product shall only be produced in a Jensen Infrastructure facility.

NAME & DESCRIPTION: 200033724
Door Component Steel Plate, Top Lockbox,Nameplate

REV: D-2-1

WEIGHT: 161.442 lbmass

DRAWN BY: R. Dohr

CREATED: 12/17/2019

MODIFIED: 2/16/2026

SHEET: 14 OF 20

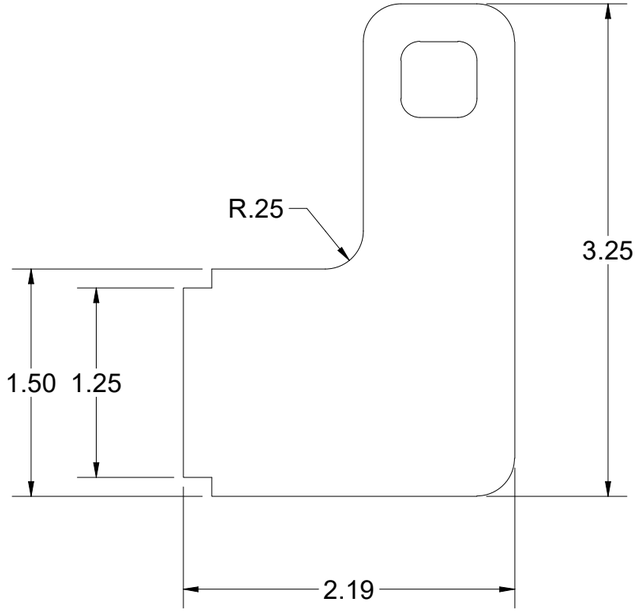

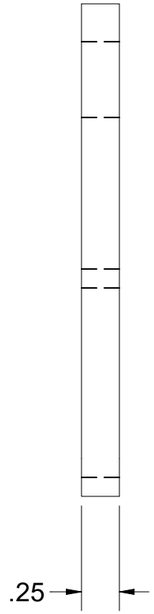

BEND TABLE				MATERIAL IFS: 100007735			
BEND RADIUS	V-OPENING	BEND ANGLE	BEND DEDUCTION	MATERIAL THK: 0.25			
-	-	-	-	MAT DESCRIPTION: STL ASTM A36 SM-HRPO RAW .250			

Infrastructure
JENSEN
527 Dunn Circle, Sparks, NV 89431
775-352-2716 FAX: 755-358-8127
JENSENMETALTECH.COM

©2026 Jensen Infrastructure - All rights reserved.
All materials appearing as Jensen Infrastructure documents and the like are proprietary work product and are protected under U.S. copyright and other laws. Unless in conjunction with business conducted with Jensen Infrastructure , any use of Jensen Infrastructure work product without express, written consent is prohibited, and recipient is prohibited from distributing any and all work product to non-approved third parties under penalty of civil action.
This product shall only be produced in a Jensen Infrastructure facility.

NAME & DESCRIPTION: 200036210 Frame Component Steel Lock Box Tang. Lockbox		REV: D-2-1
WEIGHT: 0.335 lbmass	DRAWN BY: R. Dohr	SHEET: 15 OF 20
CREATED: 12/17/2019	MODIFIED: 2/16/2026	

100008794.idw

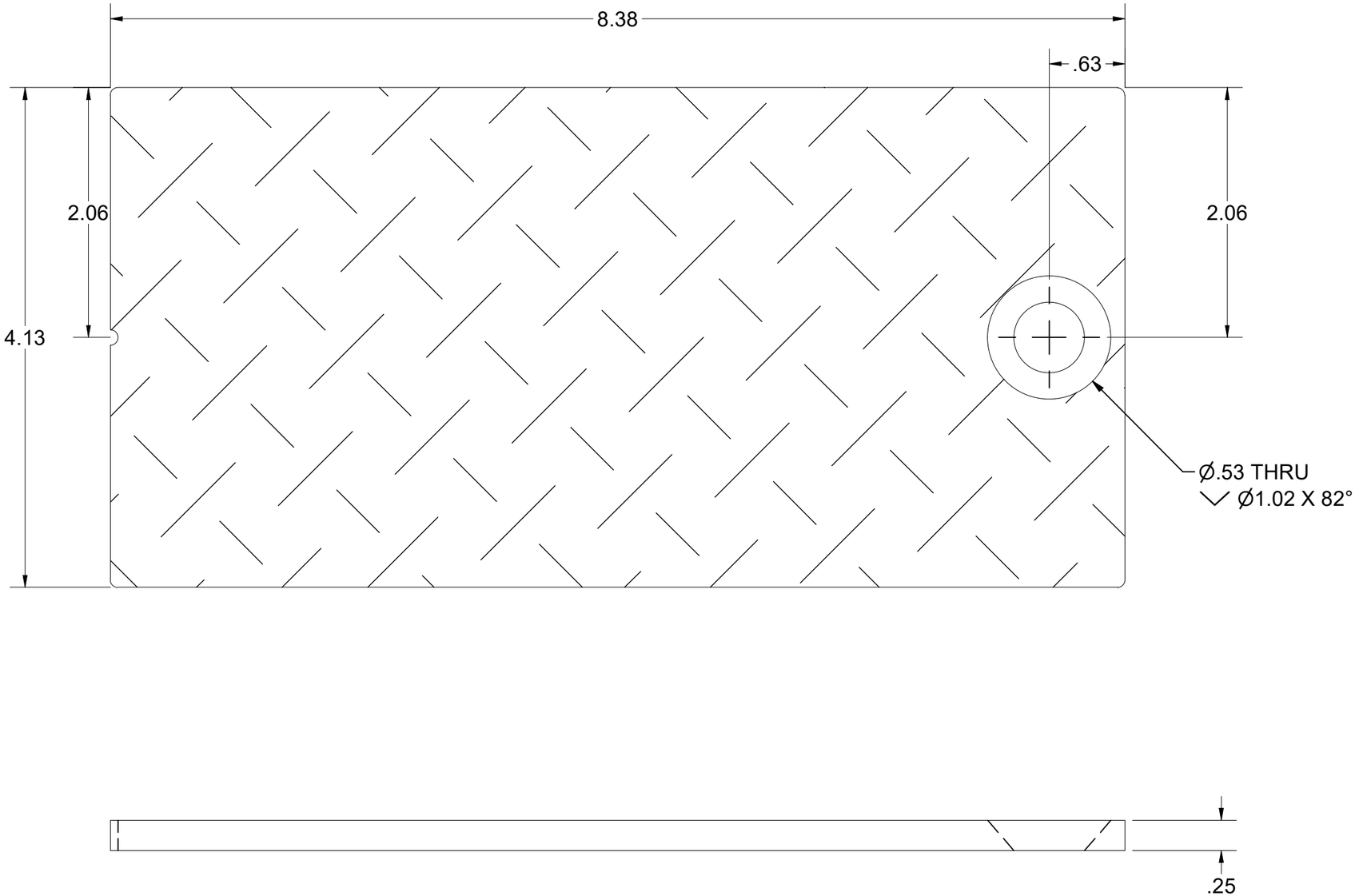

BEND TABLE				MATERIAL IFS: 100007736	Infrastructure JENSEN 527 Dunn Circle, Sparks, NV 89431 775-352-2716 FAX: 755-358-8127 *JENSENMETALTECH.COM*	©2026 Jensen Infrastructure - All rights reserved. All materials appearing as Jensen Infrastructure documents and the like are proprietary work product and are protected under U.S. copyright and other laws. Unless in conjunction with business conducted with Jensen Infrastructure , any use of Jensen Infrastructure work product without express, written consent is prohibited, and recipient is prohibited from distributing any and all work product to non-approved third parties under penalty of civil action. This product shall only be produced in a Jensen Infrastructure facility.	NAME & DESCRIPTION: 200064973 Door Component Steel Lock Box Bolting Plate		REV: D-2-1
BEND RADIUS	V-OPENING	BEND ANGLE	BEND DEDUCTION	MATERIAL THK: 0.25			WEIGHT: 2.661 lbmass	DRAWN BY: R. Dohr	SHEET: 16 OF 20
-	-	- 0	-	MAT DESCRIPTION: SHT STL CQ DP RAW .25 - 36 KSI YIELD			CREATED: 12/17/2019	MODIFIED: 2/16/2026	

100008794.idw

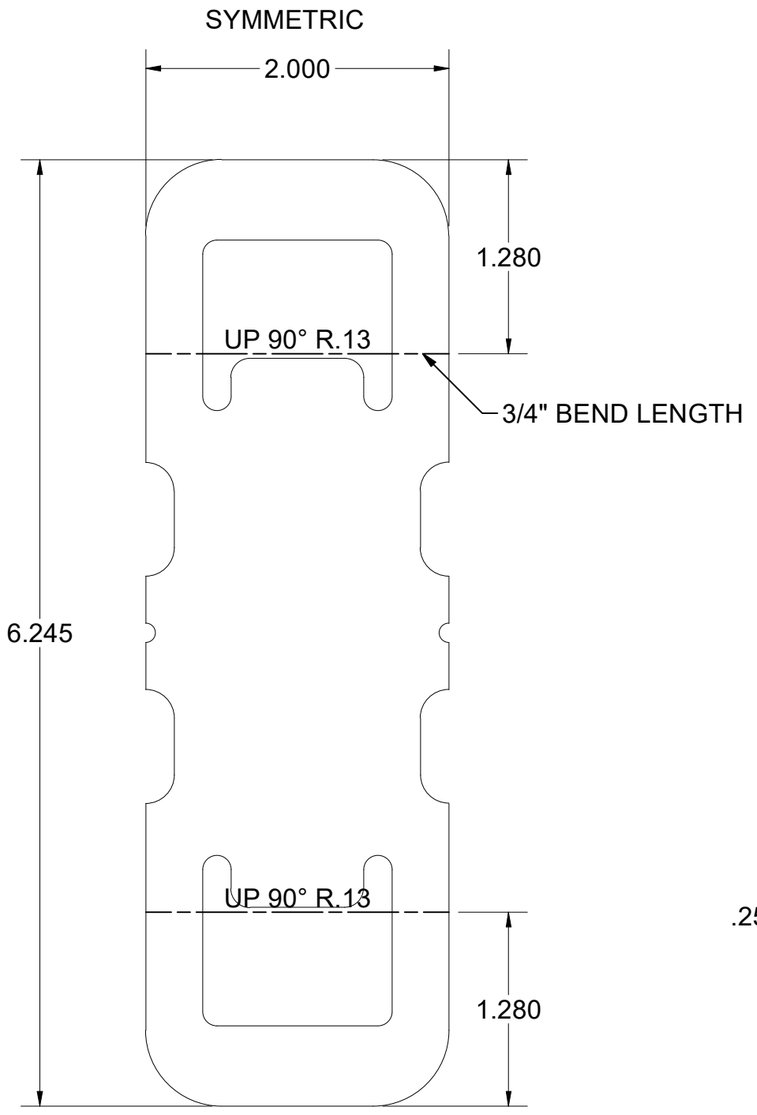

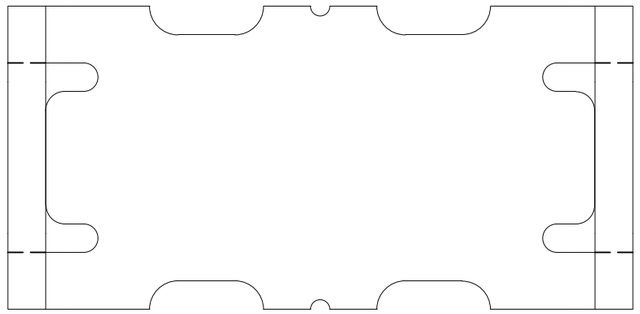

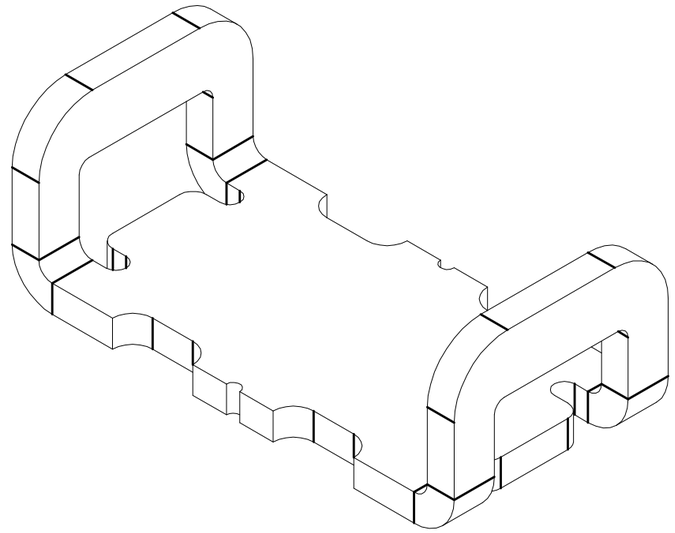

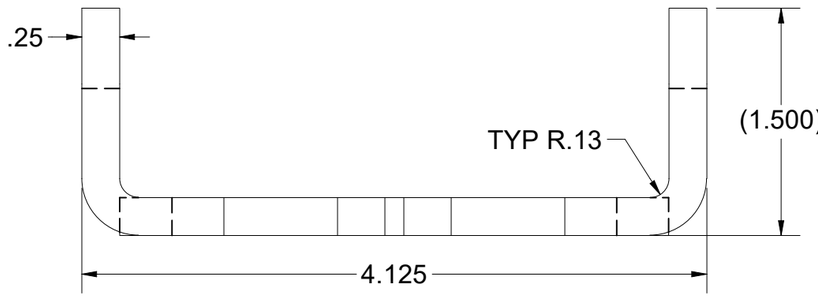

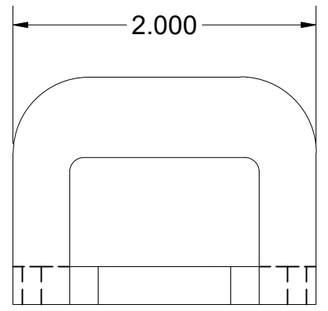

100008794.idw

BEND TABLE			
BEND RADIUS	V-OPENING	BEND ANGLE	BEND DEDUCTION
0.125	2	90	0.44

MATERIAL IFS: 100007735

MATERIAL THK: 0.25

MAT DESCRIPTION: STL ASTM A36 SM-HRPO RAW .250

Infrastructure
JENSEN
527 Dunn Circle, Sparks, NV 89431
775-352-2716 FAX: 755-358-8127
JENSENMETALTECH.COM

©2026 Jensen Infrastructure - All rights reserved.
All materials appearing as Jensen Infrastructure documents and the like are proprietary work product and are protected under U.S. copyright and other laws. Unless in conjunction with business conducted with Jensen Infrastructure , any use of Jensen Infrastructure work product without express, written consent is prohibited, and recipient is prohibited from distributing any and all work product to non-approved third parties under penalty of civil action.
This product shall only be produced in a Jensen Infrastructure facility.

NAME & DESCRIPTION: 200064977 LOCKBOX HINGE

REV: D-2-1

WEIGHT: 0.688 lbmass

DRAWN BY: R. Dohr

SHEET: 17 OF 20

CREATED: 12/17/2019

MODIFIED: 2/16/2026

SYMMETRIC

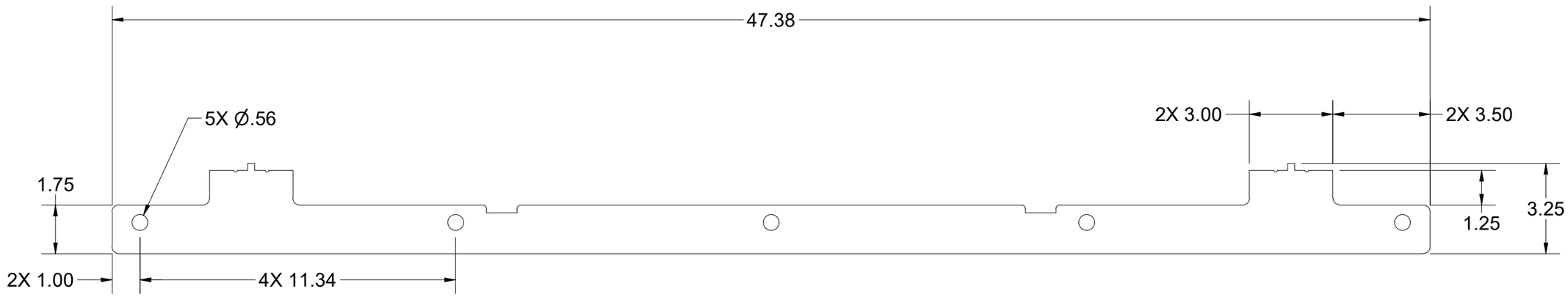

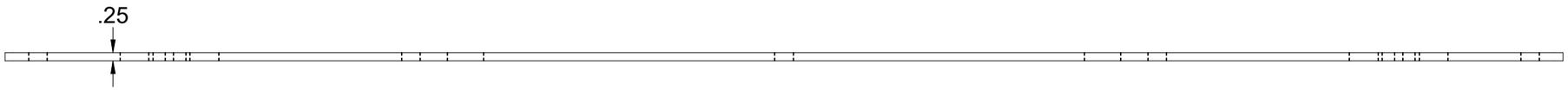

BEND TABLE				MATERIAL IFS: 100007735
BEND RADIUS	V-OPENING	BEND ANGLE	BEND DEDUCTION	MATERIAL THK: 0.25
-	-	-	-	MAT DESCRIPTION: STL ASTM A36 SM-HRPO RAW .250

Infrastructure JENSEN
527 Dunn Circle, Sparks, NV 89431
775-352-2716 FAX: 755-358-8127
JENSENMETALTECH.COM

©2026 Jensen Infrastructure - All rights reserved.
All materials appearing as Jensen Infrastructure documents and the like are proprietary work product and are protected under U.S. copyright and other laws. Unless in conjunction with business conducted with Jensen Infrastructure , any use of Jensen Infrastructure work product without express, written consent is prohibited, and recipient is prohibited from distributing any and all work product to non-approved third parties under penalty of civil action.
This product shall only be produced in a Jensen Infrastructure facility.

NAME & DESCRIPTION: 200087252 Door Component Steel Lap Bar 48in, 2.5" Stiffener Offset		REV: D-2-1
WEIGHT: 6.293 lbmass	DRAWN BY: R. Dohr	SHEET: 18 OF 20
CREATED: 12/17/2019	MODIFIED: 2/16/2026	

100008794.idw

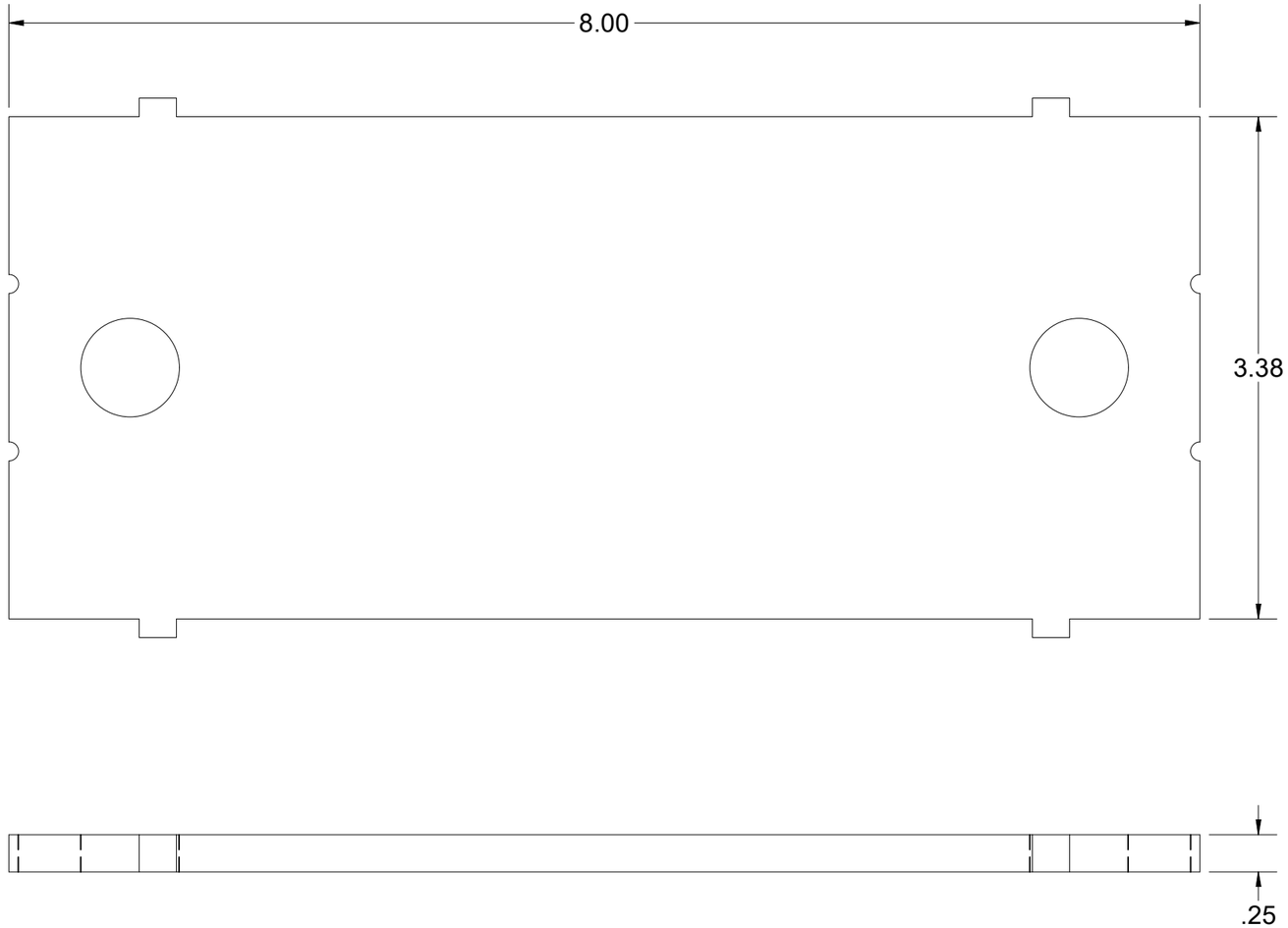

BEND TABLE			
BEND RADIUS	V-OPENING	BEND ANGLE	BEND DEDUCTION
-	-	- 0	-

MATERIAL IFS: 100007735

MATERIAL THK: 0.25

MAT DESCRIPTION: STL ASTM A36 SM-HRPO RAW .250

Infrastructure
JENSEN
527 Dunn Circle, Sparks, NV 89431
775-352-2716 FAX: 755-358-8127
JENSENMETALTECH.COM

©2026 Jensen Infrastructure - All rights reserved.
All materials appearing as Jensen Infrastructure documents and the like are proprietary work product and are protected under U.S. copyright and other laws. Unless in conjunction with business conducted with Jensen Infrastructure , any use of Jensen Infrastructure work product without express, written consent is prohibited, and recipient is prohibited from distributing any and all work product to non-approved third parties under penalty of civil action.
This product shall only be produced in a Jensen Infrastructure facility.

NAME & DESCRIPTION: 200091824
NAME PLATE BACKING PLATE

REV: D-2-1

WEIGHT: 1.876 lbmass

DRAWN BY: R. Dohr

CREATED: 12/17/2019

MODIFIED: 2/16/2026

SHEET: 19 OF 20

100008794.idw

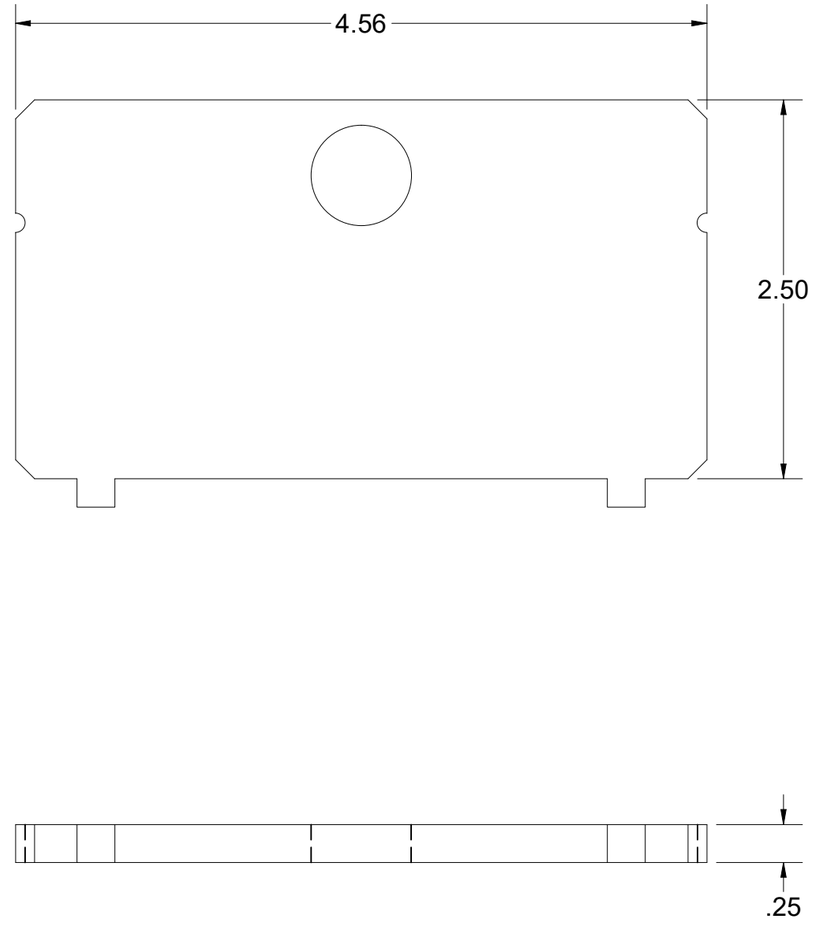

BEND TABLE				MATERIAL IFS: 100007735		NAME & DESCRIPTION: 200112827		REV:
BEND RADIUS	V-OPENING	BEND ANGLE	BEND DEDUCTION	MATERIAL THK: 0.25		LOCK BOX DAPPED END BOLT DOWN PLATE		D-2-1
-	-	- 0	-	MAT DESCRIPTION: STL ASTM A36 SM-HRPO RAW .250		WEIGHT: 0.789 lbmass	DRAWN BY: R. Dohr	SHEET: 20 OF 20
						CREATED: 12/17/2019	MODIFIED: 2/16/2026	

Infrastructure
JENSEN
527 Dunn Circle, Sparks, NV 89431
775-352-2716 FAX: 755-358-8127
JENSENMETALTECH.COM

©2026 Jensen Infrastructure - All rights reserved.
All materials appearing as Jensen Infrastructure documents and the like are proprietary work product and are protected under U.S. copyright and other laws. Unless in conjunction with business conducted with Jensen Infrastructure , any use of Jensen Infrastructure work product without express, written consent is prohibited, and recipient is prohibited from distributing any and all work product to non-approved third parties under penalty of civil action.
This product shall only be produced in a Jensen Infrastructure facility.

100008794.idw