DESIGN NOTES:

- CONCRETE SHALL HAVE A 28 DAY MINIMUM COMPRESSIVE STRENGTH OF 5000 PSI
- SOIL UNIT WEIGHT DRY - 110 lbs/cu.ft.
- EQUIVALENT LATERAL PRESSURE DRY - 40 lbs/cu.ft.
- SOIL UNIT WEIGHT WET - 120 lbs/cu.ft.
- EQUIVALENT LATERAL PRESSURE WET - 80 lbs/cu.ft.

PRODUCTION NOTES:

- THIS PRODUCT SHALL ONLY BE PRODUCED IN A JENSEN INFRASTRUCTURE FACILITY
- LIFTING INSERTS SHALL BE INSTALLED PER MANUFACTURER'S REQUIREMENTS
- APPLIED FINISH - NONE
- INTERNAL LINER/COATING -
- EXTERNAL LINER/COATING -

BILL OF MATERIALS

ITEM	QTY	PART NUMBER	DESCRIPTION
1	1	100001009	Small Box PB 1730x6 Box Cast-In Frame
2	1	100002454	DAS1-SD-1730-D4-TRX-R-SAC-ATT
3	4	100007441	STRUT FITTING SPRING NUT 1/2-13 UNC 1-5/8 CHANNEL REGULAR SPRING ZINC
4	4	100004451	BOLT PENTA 1/2-13 UNC 0.875 HEAD 1.5L SS
5	4	100008814	WASHER FLAT 1/2 REGULAR TYPE A GALV

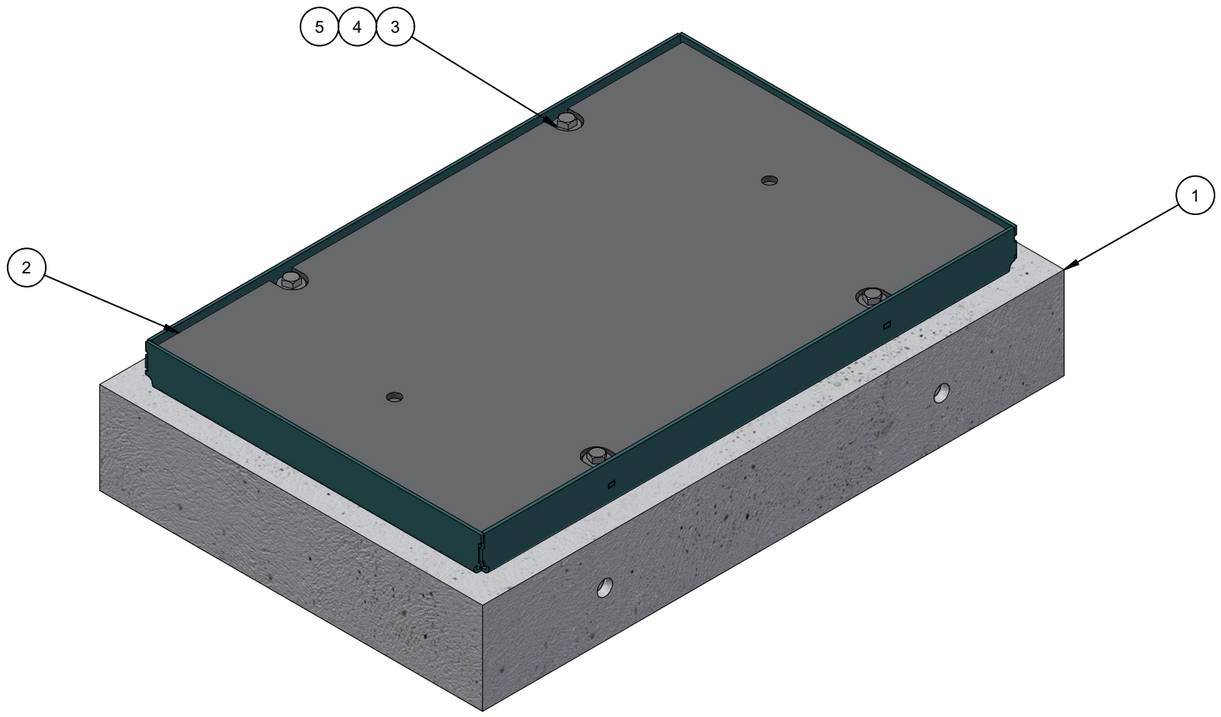

ISO LAYOUT

100008602.idw

LIFTING NOTES
■ THIS CONCRETE PRODUCT IS DESIGNED TO BE LIFTED AT 2500 PSI WITH 4 LIFT CONNECTIONS EQUALLY LOADED TO 2 LIFTING POINTS AT A MINIMUM 60° SLING ANGLE, MEASURED FROM HORIZONTAL.
*All rigging shall be design by a qualified professional. Loading diagrams show illustrations of possible rigging setups to achieve the required sling angle and load leg equalization. Other valid rigging configurations are possible. A qualified professional must be consulted prior to lifting.

RIGGING DIAGRAM*	B

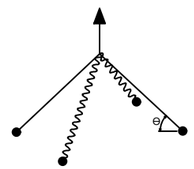

BURY DEPTH:	0.0' - 0.0' to Top		
WATER LEVEL:	3.5'	APPROX. WEIGHT:	359.46 Lbs
DESIGN SPEC:		LOADING SPEC:	
REINFORCEMENT TYPE:		LIFTING TYPE:	Insert

Infrastructure
JENSEN
WWW.JENSENINFRASTRUCTURE.COM

©2026 Jensen Infrastructure - All rights reserved.
All materials appearing as Jensen Infrastructure documents and the like are proprietary work product and are protected under U.S. copyright and other laws.
Unless in conjunction with business conducted with Jensen Infrastructure , any use of Jensen Infrastructure work product without express, written consent is prohibited, and recipient is prohibited from distributing any and all work product to non-approved third parties under penalty of civil action.
This product shall only be produced in a Jensen Infrastructure facility.

CHANGE HISTORY			
NO.	DESCRIPTION	DATE	BY
1	DRAWING CREATED	12/7/2020	MRV
2	KEYWAY/LIFTER UPDATE	3/2/2021	MRV
3	HATCH FRAME REVISION	2/9/2026	AMV

DESCRIPTION:	Splice Box 1730 Assembly AT&T CASTING LAYOUT		REV: C-2
PART NUMBER:	100008602	DRAWN BY:	A. Viveiros
CREATED:	12/7/2020	MODIFIED:	3/5/2026
			SHEET: 1 OF 1