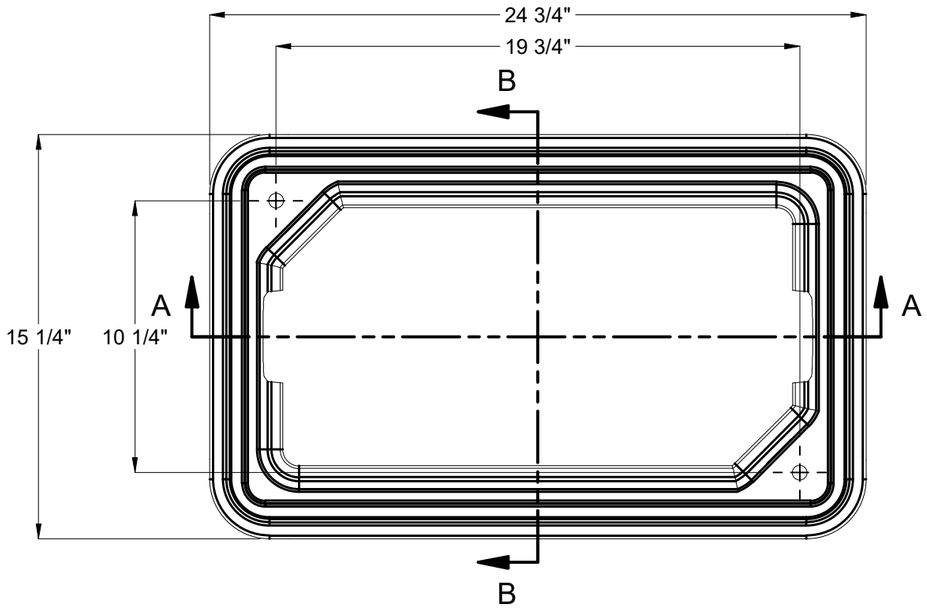

BILL OF MATERIALS

ITEM	UNIT QTY	QTY	PART NUMBER	DESCRIPTION
1	0.372 ft^3	0.372 ft^3	100035038	CONCRETE COMPOSITE BOX MIX BRUCE
2	1	2	100022548	HPC PLUGS 5/8X1-3/8-14-2 PE-LD67 BLK
3	1	2	100021840	SQUARE NUT 1/2-13 304SS

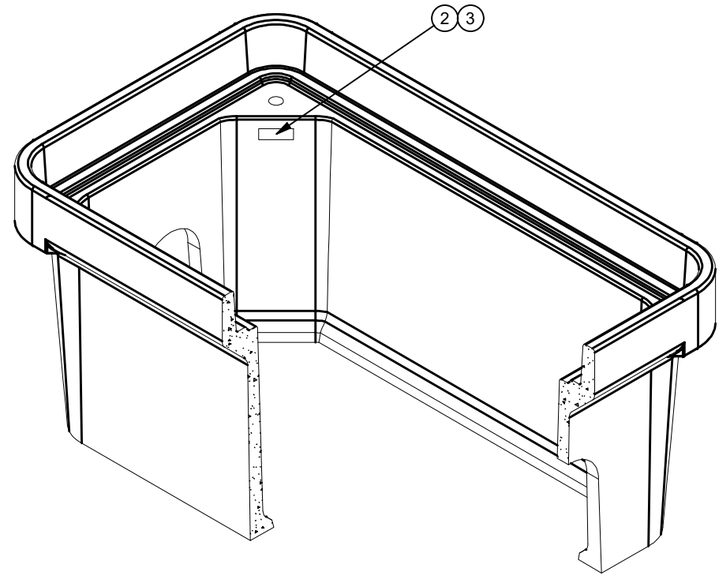

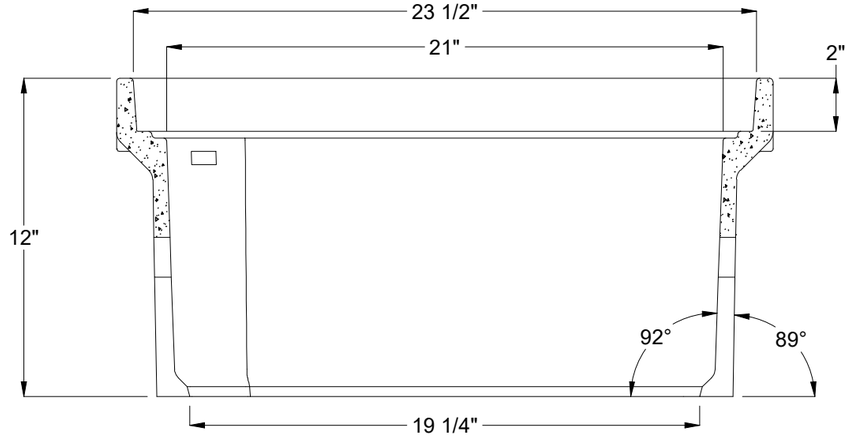

SECTION A-A

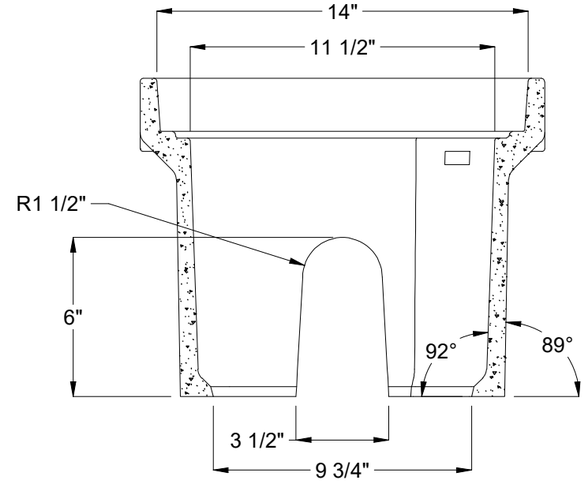

SECTION B-B

REVISION HISTORY

REV	DESCRIPTION	DATE	BY
A	INITIAL RELEASE	3/20/2022	J.W.
B	CHANGED CONCRETE PART # & DESCRIPTION, UPDATED DRAWING	12/8/2022	M.B.

DESIGN SPEC: ANSI/SCTE-77	APPROX. WEIGHT: 45.62 lbs		
AGENCY:	DESIGN/TEST LOAD:		
AGENCY SPEC:	LOADING SPEC:		

JENSEN PRECAST EST. 1968

©2023 Jensen Precast- All rights reserved.
Unless expressly authorized by Jensen Precast any use or duplication is strictly prohibited under penalty of civil action or codes.

DESCRIPTION: HPC 1324x12 Polymer Box 1/2-13 SS Nut Mousehole V0

REV: B-5

PART #:	100008589	DRAWN BY:	M. Baumann
CREATED:	3/11/2019	MODIFIED:	9/7/2023

SHEET: 1 OF 1

100008589.idw