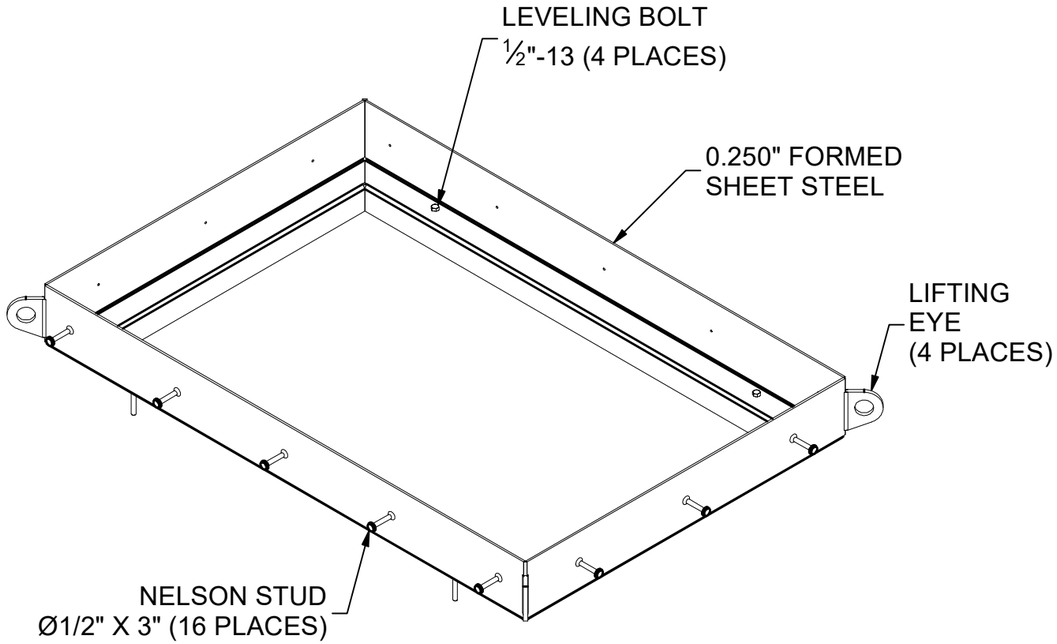

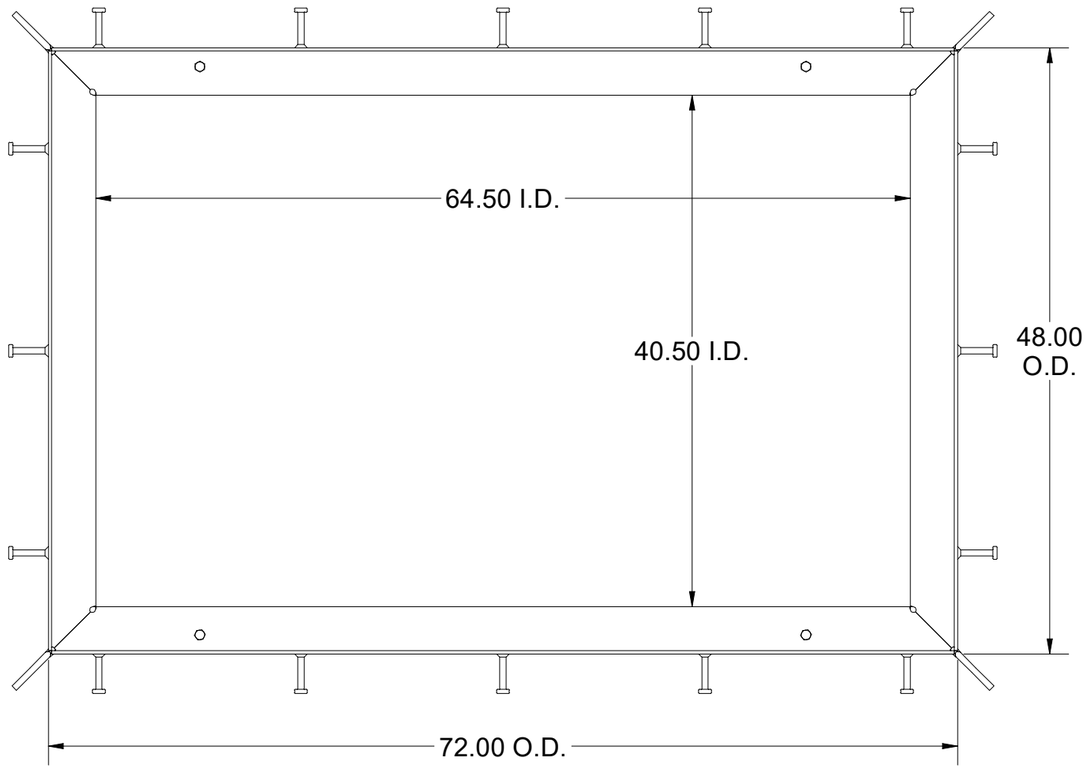

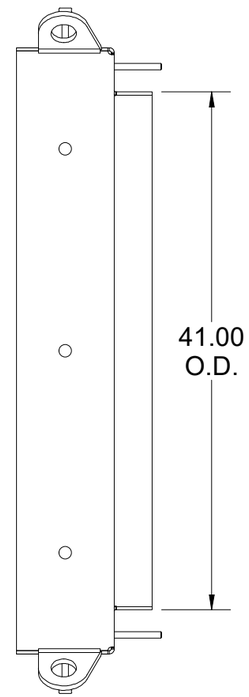

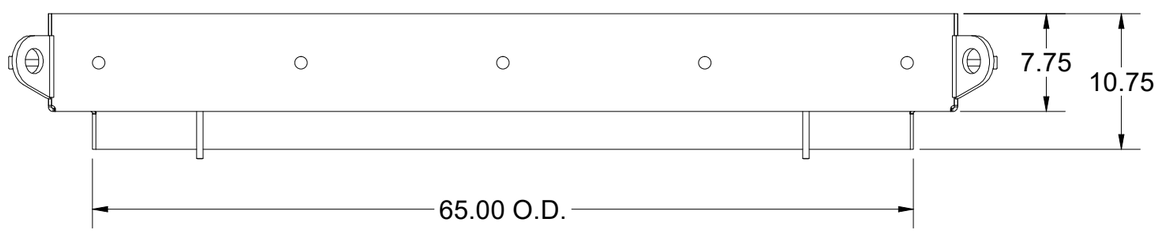

100007486.idw

LOADING CRITERIA: N/A

SURFACE:	Smooth	FINISH:	Galvanized
WEIGHT:	140 lbs	MARKING:	None

JENSEN METALTECH
450 E. GLENDALE AVE. SPARKS. NV 89431
775-352-2716 FAX: 755-358-8127
JENSENMETALTECH.COM

©2025 Jensen Precast- All rights reserved.
All materials appearing as Jensen Precast documents and the like are proprietary work product and are protected under U.S. copyright and other laws.
Unless in conjunction with business conducted with Jensen Precast, any use of Jensen Precast work product without express, written consent is prohibited, and recipient is prohibited from distributing any and all work product to non-approved third parties under penalty of civil action.

DESCRIPTION:	PLFAS-4266-HDO-G-SAC-SMUD-OH11 42x66 Plug Frame Assembly (Loading Criteria Per N/A, Steel, Drop In, Smooth, Galvanized, SMUD) 11	REV:	B-1
PART NUMBER:	100007486	DRAWN BY:	R. Dohr
CREATED:	4/17/2018	MODIFIED:	1/29/2025
		SHEET:	1

BILL OF MATERIALS

ITEM	ITEM QTY	QTY	PART NUMBER	DESCRIPTION	PART NAME
1	2	137.747 lbmass	100007735	Frame Component Steel Frame Side, Cast In	200096574
2	2	89.967 lbmass	100007735	Frame Component Steel Frame End, Cast In	200096575
3	16	16	100007886	STUD NELSON WELD H4L-HEADED A36 1/2X3-1/8	100007886
4	4	6.808 lbmass	100007806	FRAME LIFTING EYE	200015285
5	4	4	100044236	BOLT HEX 1/2-13 UNC 4 ZINC GR5	100044236

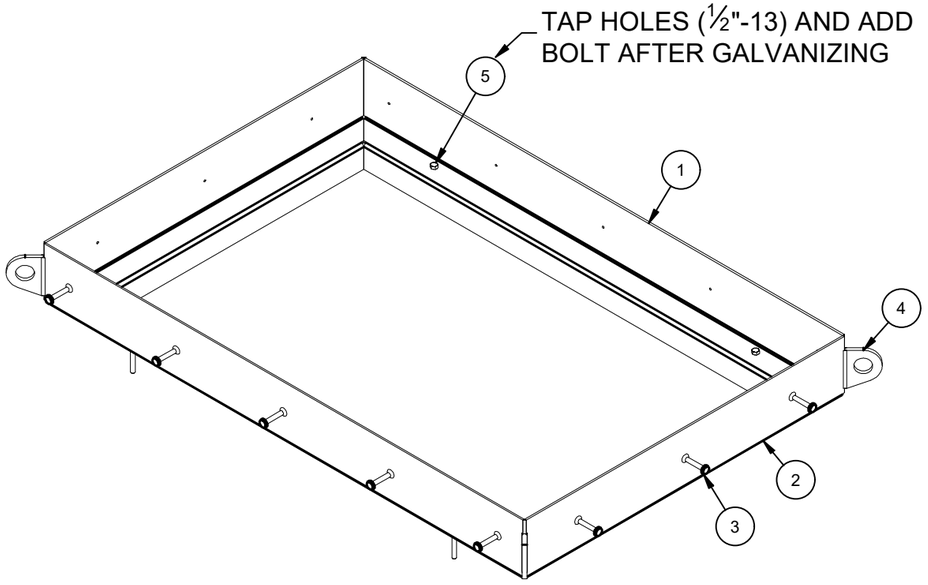

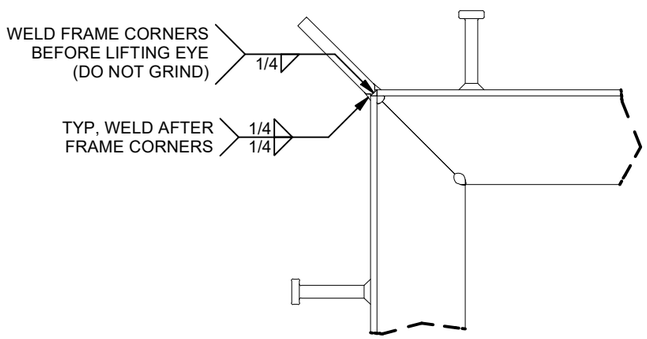

DETAIL A
SCALE 1 / 6

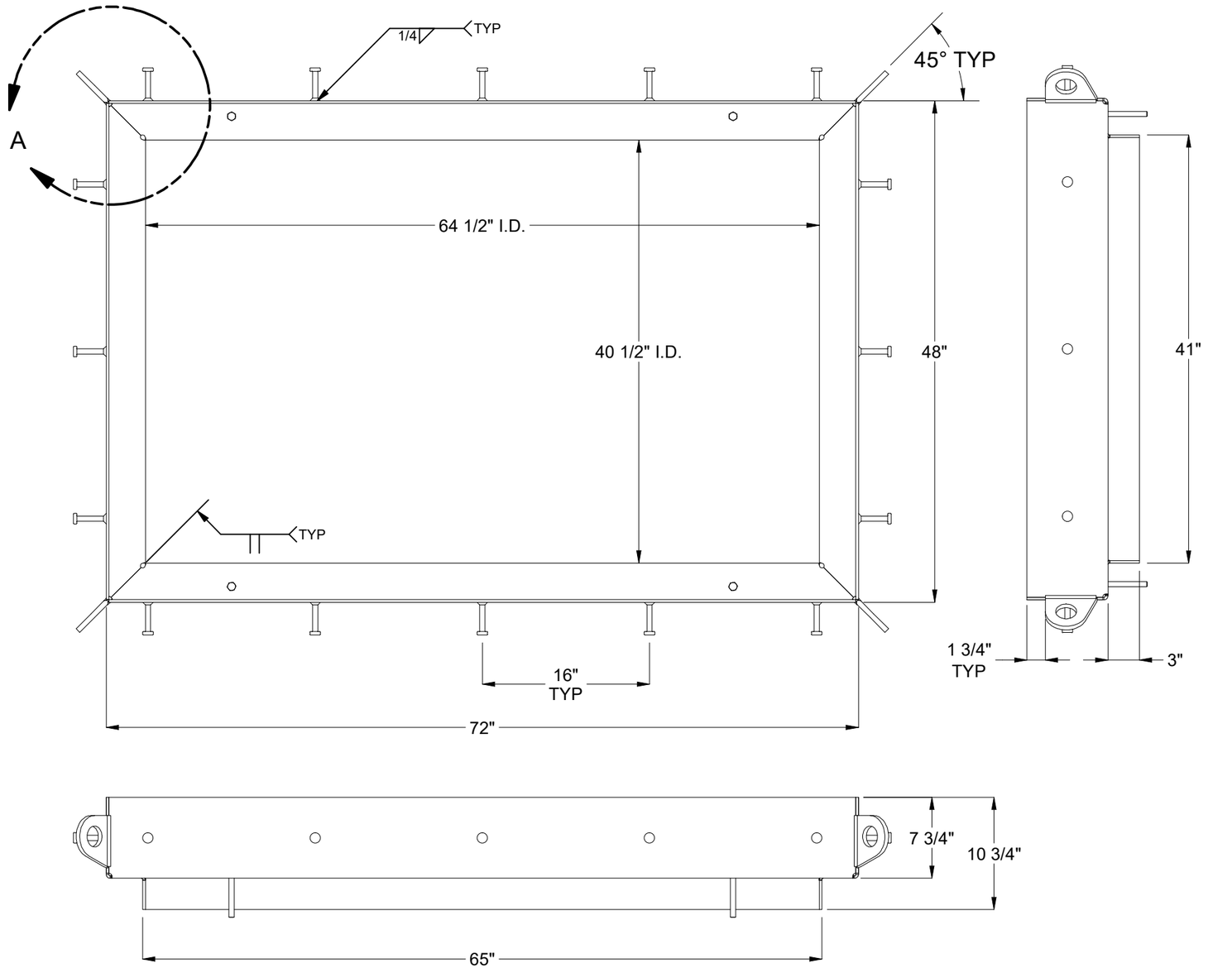

100007486.idw

REVISION HISTORY	
DESCRIPTION	DATE
CONVERTED TO INVENTOR AND SWAPPED LEVELING BOLTS TO 100044236	1/29/25

MATERIAL FINISH: Galvanized

MATERIAL SURFACE: Smooth

JENSEN METALTECH
450 E. GLENDALE AVE. SPARKS. NV 89431
775-352-2716 FAX: 755-358-8127
JENSENMETALTECH.COM

©2025 Jensen Precast- All rights reserved. All materials appearing as Jensen Precast documents and the like are proprietary work product and are protected under U.S. copyright and other laws. Unless in conjunction with business conducted with Jensen Precast, any use of Jensen Precast work product without express, written consent is prohibited, and recipient is prohibited from distributing any and all work product to non-approved third parties under penalty of civil action.

PART NUMBER & DESCRIPTION: 100007486 PLFAS-4266-HDO-G-SAC-SMUD-OH11

REV: B-1

WEIGHT: 140 Lbs

DRAWN BY: R. Dohr

CREATED: 4/17/2018

MODIFIED: 1/29/2025

SHEET: 2

BURN LIST - BOM

PART NAME	ITEM QTY	QTY	DESCRIPTION	STOCK NUMBER	MATERIAL	MASS	SHEET
200015285	4	6.808 lbmass	FRAME LIFTING EYE	100007806	STL ASTM A36 SM-HRPO RAW .500	1.702 lbmass	04
200096574	2	137.747 lbmass	Frame Component Steel Frame Side, Cast In	100007735	STL ASTM A36 SM-HRPO RAW .250	68.874 lbmass	05
200096575	2	89.967 lbmass	Frame Component Steel Frame End, Cast In	100007735	STL ASTM A36 SM-HRPO RAW .250	44.984 lbmass	06

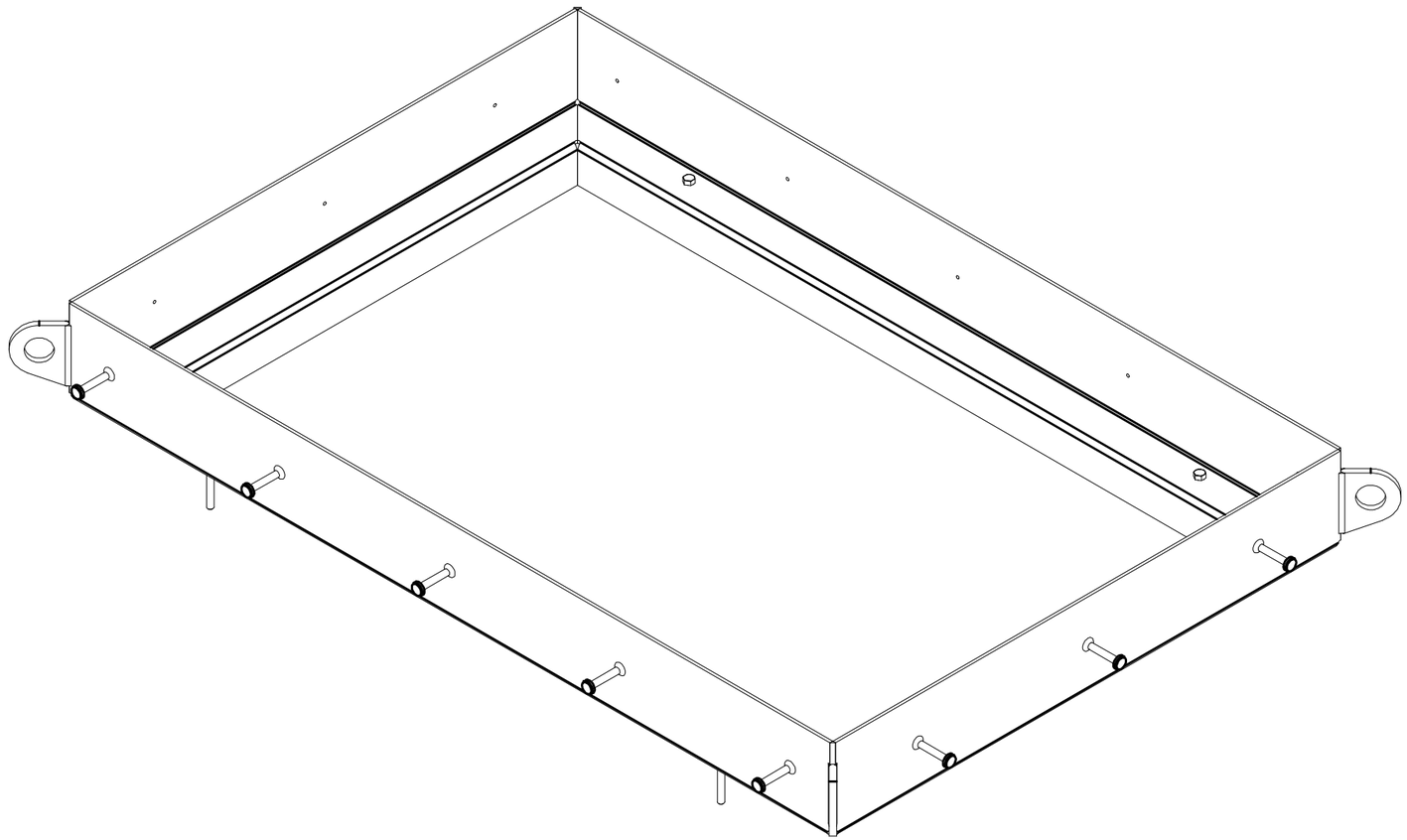

100007486.idw

MATERIAL FINISH: Galvanized

MATERIAL SURFACE: Smooth

JENSEN METALTECH
450 E. GLENDALE AVE. SPARKS. NV 89431
775-352-2716 FAX: 755-358-8127
JENSENMETALTECH.COM

©2025 Jensen Precast- All rights reserved.
All materials appearing as Jensen Precast documents and the like are proprietary work product and are protected under U.S. copyright and other laws.
Unless in conjunction with business conducted with Jensen Precast, any use of Jensen Precast work product without express, written consent is prohibited, and recipient is prohibited from distributing any and all work product to non-approved third parties under penalty of civil action.

PART NUMBER & DESCRIPTION: 100007486 PLFAS-4266-HDO-G-SAC-SMUD-OH11

REV: B-1

WEIGHT: 140 Lbs

DRAWN BY: R. Dohr

SHEET: 3

CREATED: 4/17/2018

MODIFIED: 1/29/2025

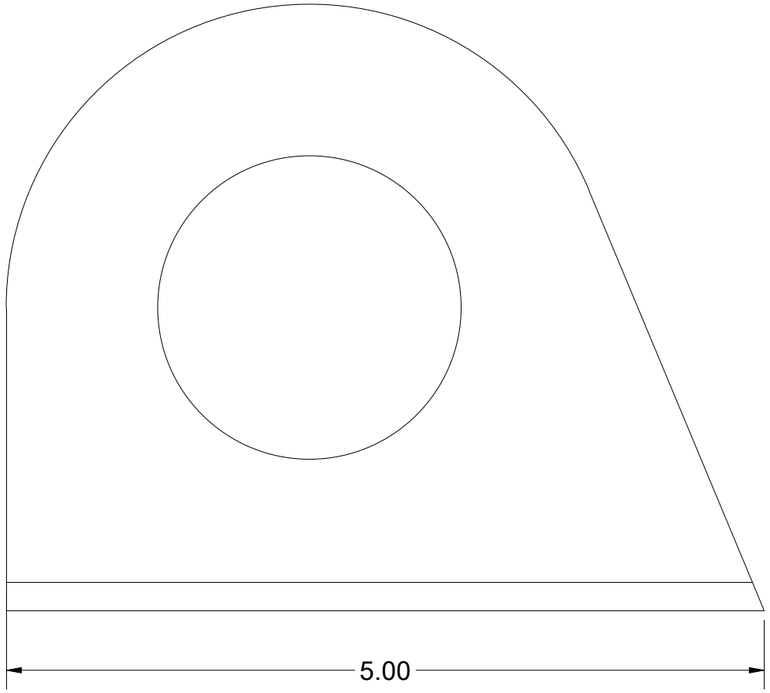

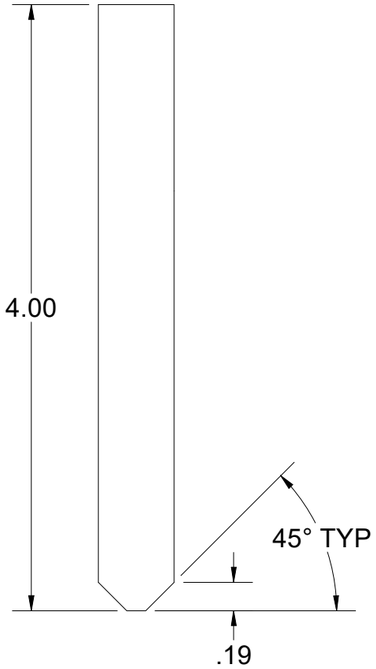

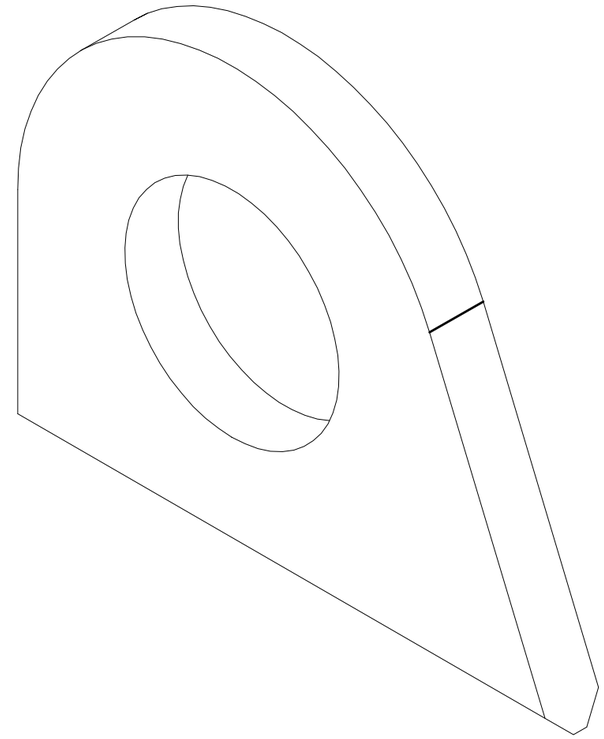

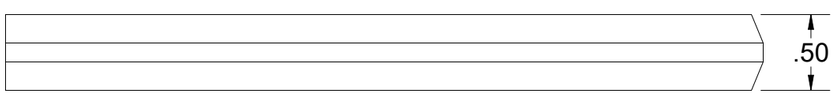

100007486.idw

BEND TABLE				MATERIAL IFS: 100007806	JENSEN METALTECH 450 E. GLENDALE AVE. SPARKS. NV 89431 775-352-2716 FAX: 755-358-8127 *JENSENMETALTECH.COM*	©2025 Jensen Precast- All rights reserved. All materials appearing as Jensen Precast documents and the like are proprietary work product and are protected under U.S. copyright and other laws. Unless in conjunction with business conducted with Jensen Precast, any use of Jensen Precast work product without express, written consent is prohibited, and recipient is prohibited from distributing any and all work product to non-approved third parties under penalty of civil action.	NAME & DESCRIPTION: 200015285 FRAME LIFTING EYE		REV: B-1
BEND RADIUS	V-OPENING	BEND ANGLE	BEND DEDUCTION	MATERIAL THK: 0.5			WEIGHT: 1.702 lbmass	DRAWN BY: R. Dohr	SHEET: 4 OF 6
-	-	-	-	MAT DESCRIPTION: STL ASTM A36 SM-HRPO RAW .500			CREATED: 4/17/2018	MODIFIED: 1/29/2025	

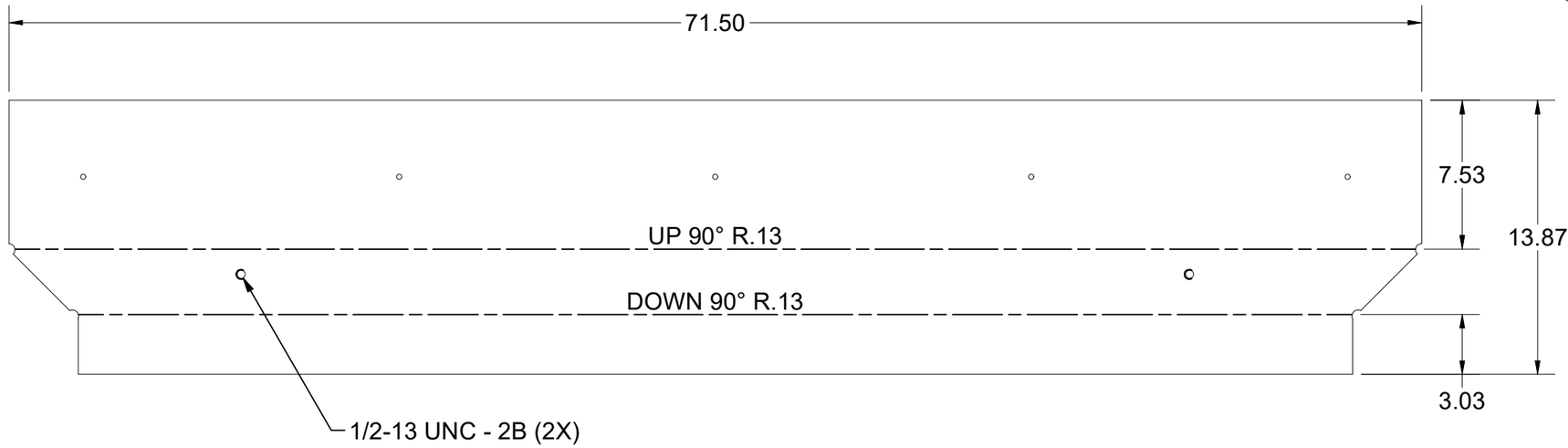

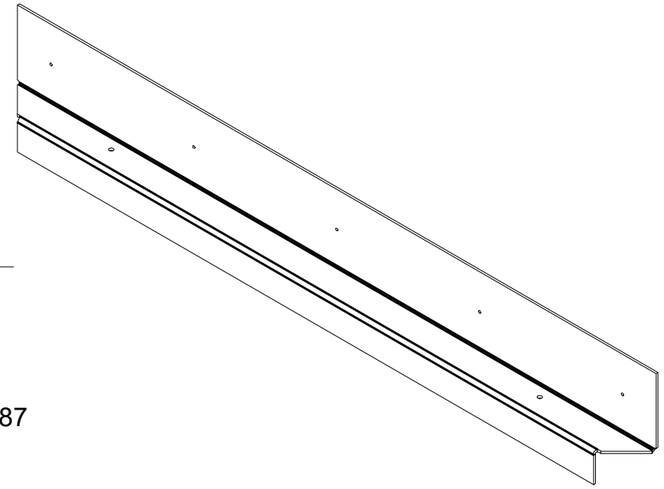

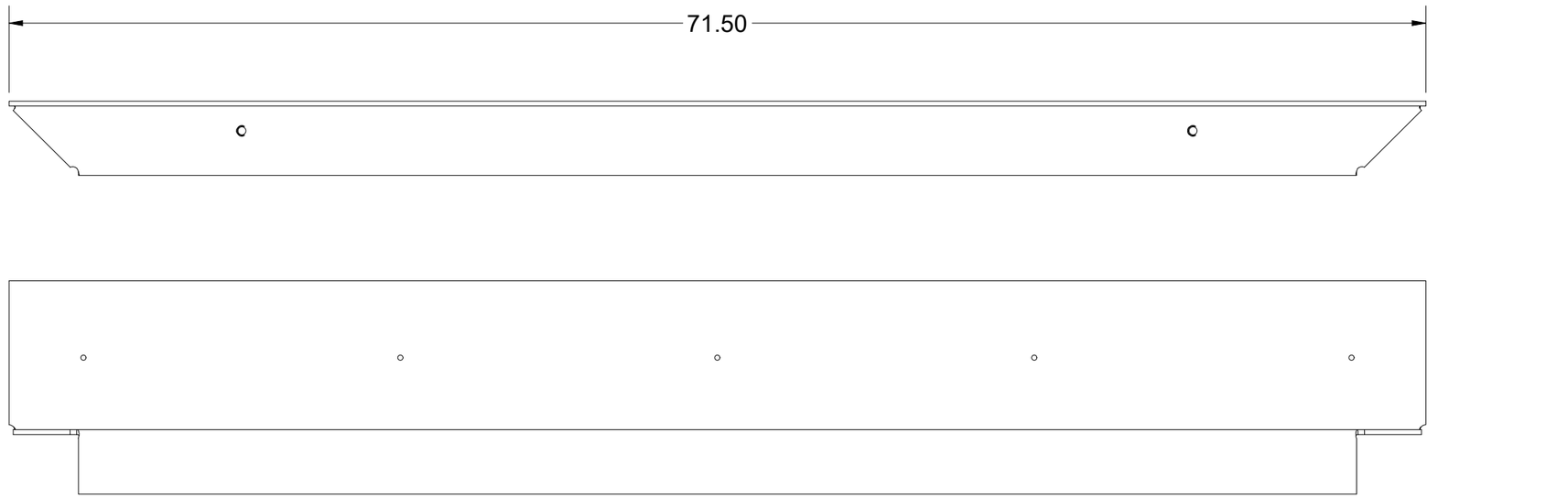

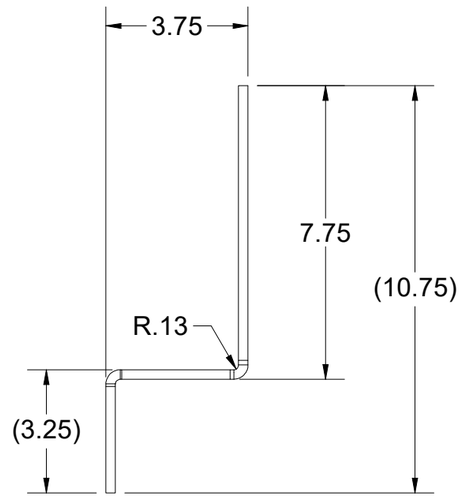

100007486.idw

BEND TABLE				MATERIAL IFS: 100007735
BEND RADIUS	V-OPENING	BEND ANGLE	BEND DEDUCTION	MATERIAL THK: 0.25
0.125	2	90	0.440	MAT DESCRIPTION: STL ASTM A36 SM-HRPO RAW .250

JENSEN METALTECH
450 E. GLENDALE AVE. SPARKS. NV 89431
775-352-2716 FAX: 755-358-8127
JENSENMETALTECH.COM

©2025 Jensen Precast- All rights reserved.
All materials appearing as Jensen Precast documents and the like are proprietary work product and are protected under U.S. copyright and other laws.
Unless in conjunction with business conducted with Jensen Precast, any use of Jensen Precast work product without express, written consent is prohibited, and recipient is prohibited from distributing any and all work product to non-approved third parties under penalty of civil action.

NAME & DESCRIPTION: 200096574 Frame Component Steel Frame Side, Cast In		REV: B-1
WEIGHT: 68.874 lbmass	DRAWN BY: R. Dohr	SHEET: 5 OF 6
CREATED: 4/17/2018	MODIFIED: 1/29/2025	

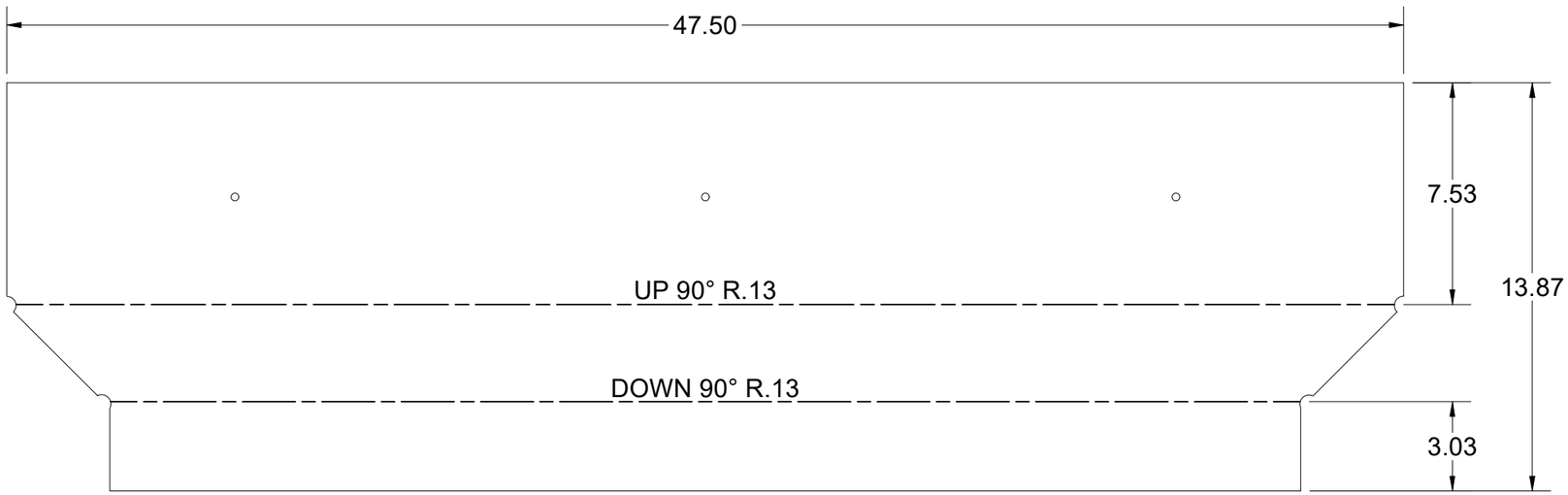

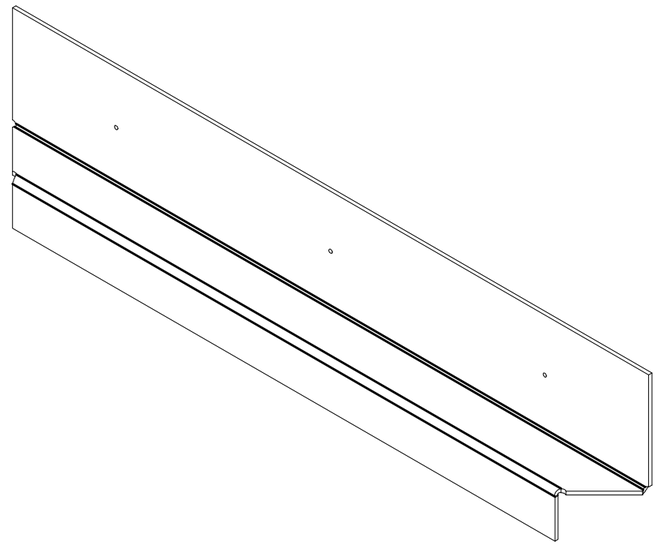



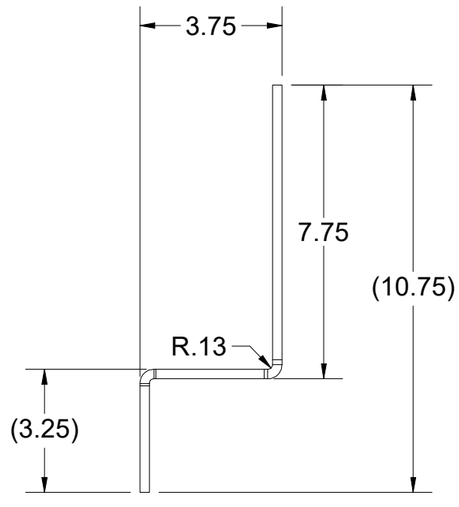

100007486.idw

BEND TABLE			
BEND RADIUS	V-OPENING	BEND ANGLE	BEND DEDUCTION
0.125	2	90	0.440

MATERIAL IFS: 100007735

MATERIAL THK: 0.25

MAT DESCRIPTION: STL ASTM A36 SM-HRPO RAW .250

JENSEN METALTECH
450 E. GLENDALE AVE. SPARKS. NV 89431
775-352-2716 FAX: 755-358-8127
JENSENMETALTECH.COM

©2025 Jensen Precast- All rights reserved. All materials appearing as Jensen Precast documents and the like are proprietary work product and are protected under U.S. copyright and other laws. Unless in conjunction with business conducted with Jensen Precast, any use of Jensen Precast work product without express, written consent is prohibited, and recipient is prohibited from distributing any and all work product to non-approved third parties under penalty of civil action.

NAME & DESCRIPTION: 200096575 Frame Component Steel Frame End, Cast In

REV: B-1

WEIGHT: 44.984 lbmass

DRAWN BY: R. Dohr

CREATED: 4/17/2018

MODIFIED: 1/29/2025

SHEET: 6 OF 6