NOTES
■ FOR COMPLETE DESIGN AND PRODUCT INFORMATION CONTACT JENSEN PRECAST.

BILL OF MATERIALS

ITEM	QTY	PART NUMBER	DESCRIPTION
1	1	100007481	PLFAS-5050-HDI-G-OH07
2	6.569 ft^3	100011425	CONCRETE MIX GENERIC 5000 PSI
3	0.893 ft^3	100032644	POLYMER CONCRETE - PLAIN - SPARKS
4	1	100012095	CI RING 36DIA NC-2250 ASTM A48 CL35B 4-B/D 5 FLANGE DOWN
5	6	100002766	INSERT FERRULE LOOP 5/8 X 3-1/2 PLATED FX-5
6	2	100007231	EYE BOLT 5/8-11 GALV

100007483.idw

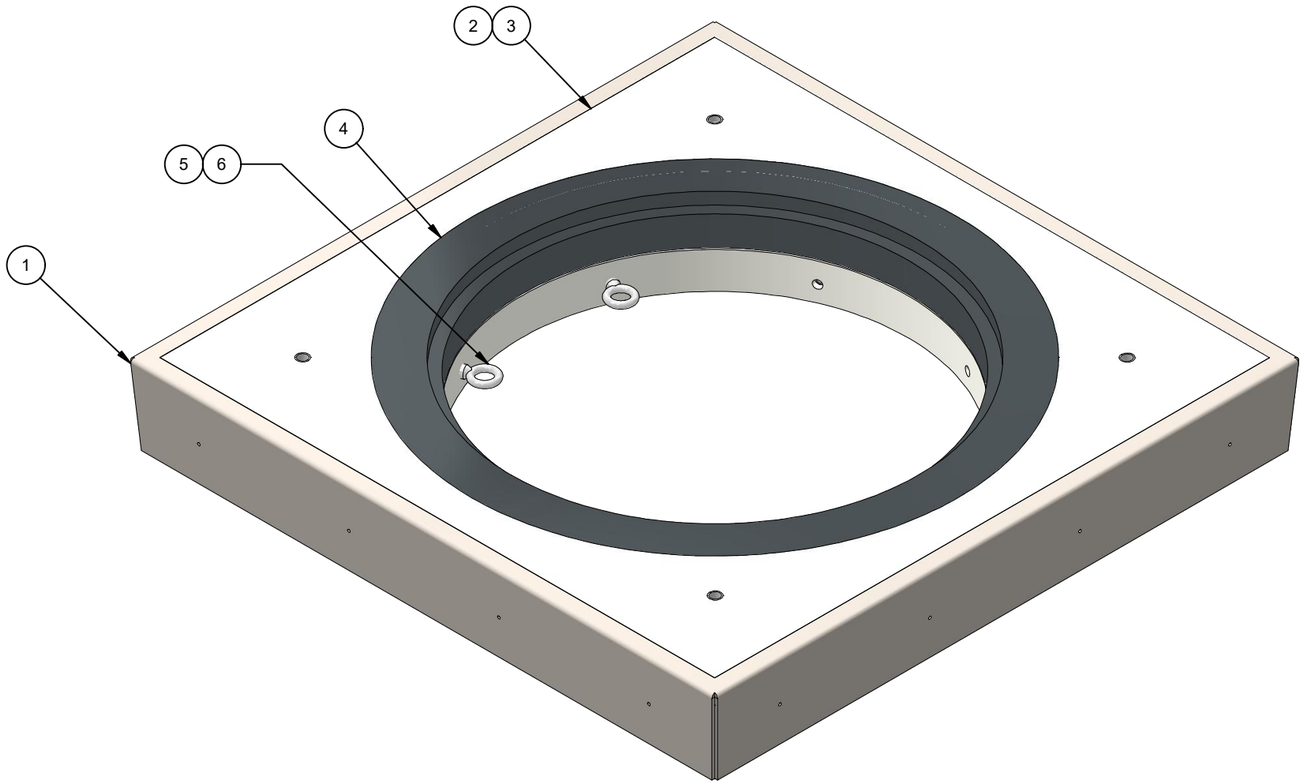

ISO VIEW

LIFTING NOTES
■ THIS CONCRETE PRODUCT IS DESIGNED TO BE LIFTED AT 2000 PSI WITH 4 LIFT CONNECTIONS EQUALLY LOADED TO 2 LIFTING POINTS AT A MINIMUM 60° SLING ANGLE, MEASURED FROM HORIZONTAL.

BURY DEPTH:	0.0' - 0.0' to Top		
WATER LEVEL:	Below Structure	APPROX. WEIGHT:	1482.48 Lbs
DESIGN SPEC:	ACI 318,ASTM C857	LOADING SPEC:	A-16 (AASHTO HS20-44)
REINFORCEMENT TYPE:	Rebar	LIFTING TYPE:	SP Socket

JENSEN PRECAST EST. 1968

WWW.JENSENPRECAST.COM

©2023 Jensen Precast- All rights reserved.
All materials appearing as Jensen Precast documents and the like are proprietary work product and are protected under U.S. copyright and other laws.
Unless in conjunction with business conducted with Jensen Precast, any use of Jensen Precast work product without express, written consent is prohibited, and recipient is prohibited from distributing any and all work product to non-approved third parties under penalty of civil action.

CHANGE HISTORY			
NO.	DESCRIPTION	DATE	BY
1	2211-54578	1/30/23	MGL
2	UPDATED CAST IRON - ADDED EYE BOLTS	04/04/23	EDC
3			

DESCRIPTION:
Plug Cover 5656x7.5 Slab Top 36"C
CASTING LAYOUT

REV: B-2

PART NUMBER:	100007483	DRAWN BY:	M. Lincoln
CREATED:	1/27/2023	MODIFIED:	4/4/2023

SHEET: 1 OF 2

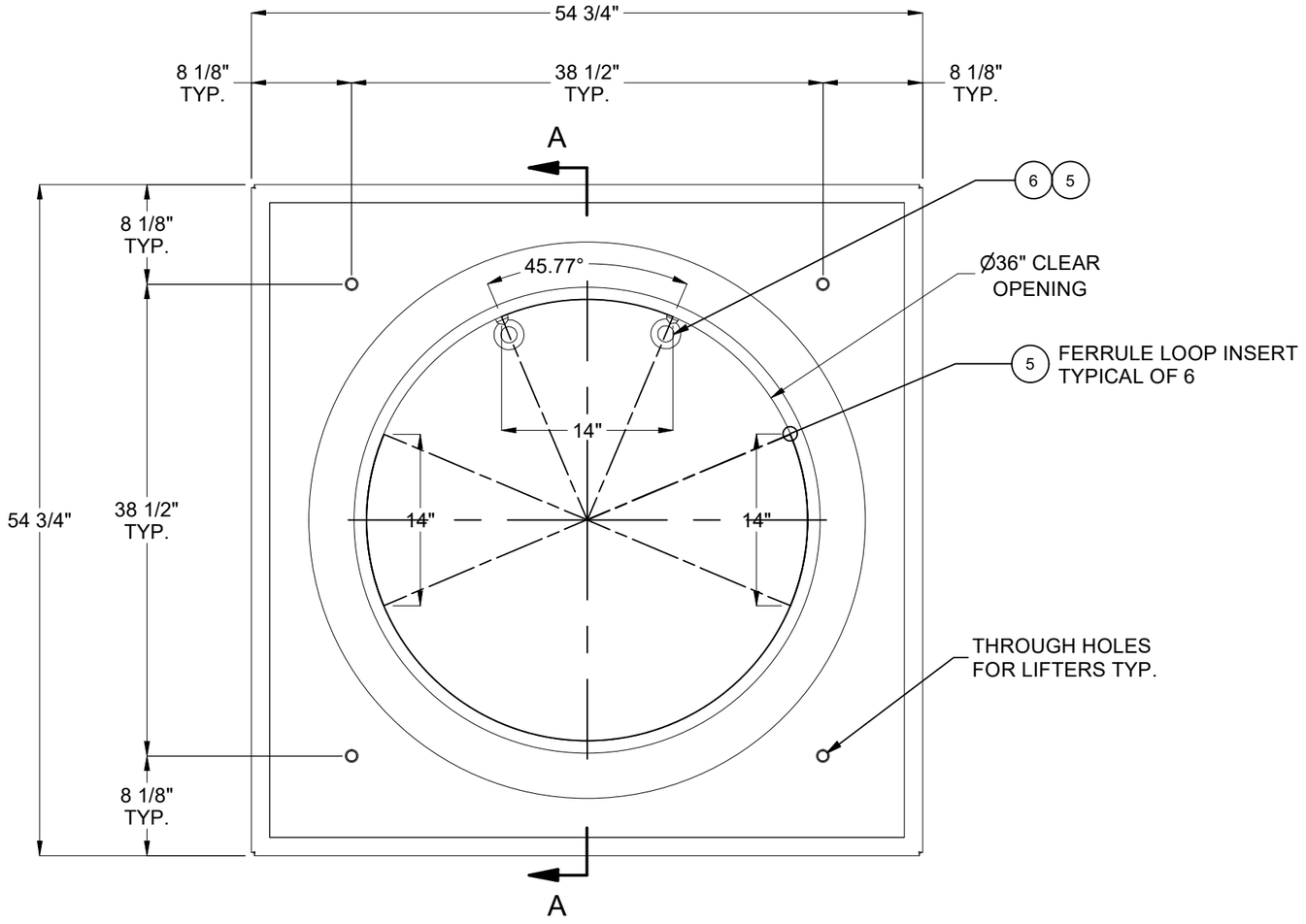

PLAN VIEW

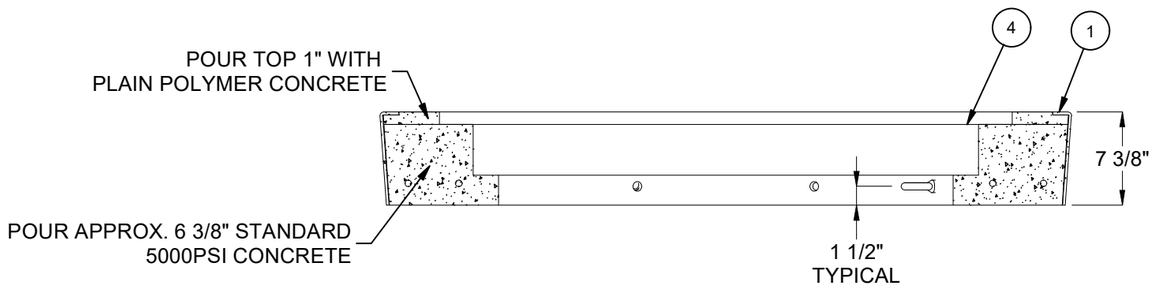

SECTION A-A

BURY DEPTH:	0.0' - 0.0' to Top		
WATER LEVEL:	Below Structure	APPROX. WEIGHT:	1482.48 Lbs
DESIGN SPEC:	ACI 318,ASTM C857	LOADING SPEC:	A-16 (AASHTO HS20-44)
REINFORCEMENT TYPE:	Rebar	LIFTING TYPE:	SP Socket

JENSEN PRECAST EST. 1968

WWW.JENSENPRECAST.COM

©2023 Jensen Precast- All rights reserved.
All materials appearing as Jensen Precast documents and the like are proprietary work product and are protected under U.S. copyright and other laws.
Unless in conjunction with business conducted with Jensen Precast, any use of Jensen Precast work product without express, written consent is prohibited, and recipient is prohibited from distributing any and all work product to non-approved third parties under penalty of civil action.

DESCRIPTION:	Plug Cover 5656x7.5 Slab Top 36"C CASTING DRAWING		
PART NUMBER:	100007483	DRAWN BY:	M. Lincoln
CREATED:	1/27/2023	MODIFIED:	4/4/2023

REV: B-2

SHEET: 2 OF 2

100007483.idw