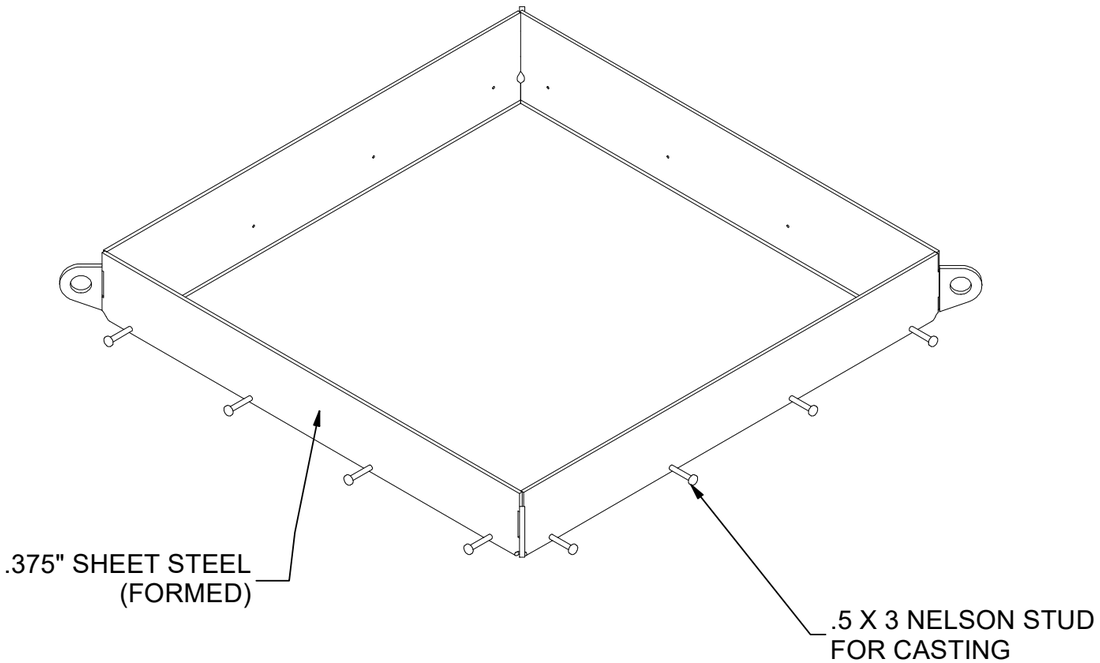

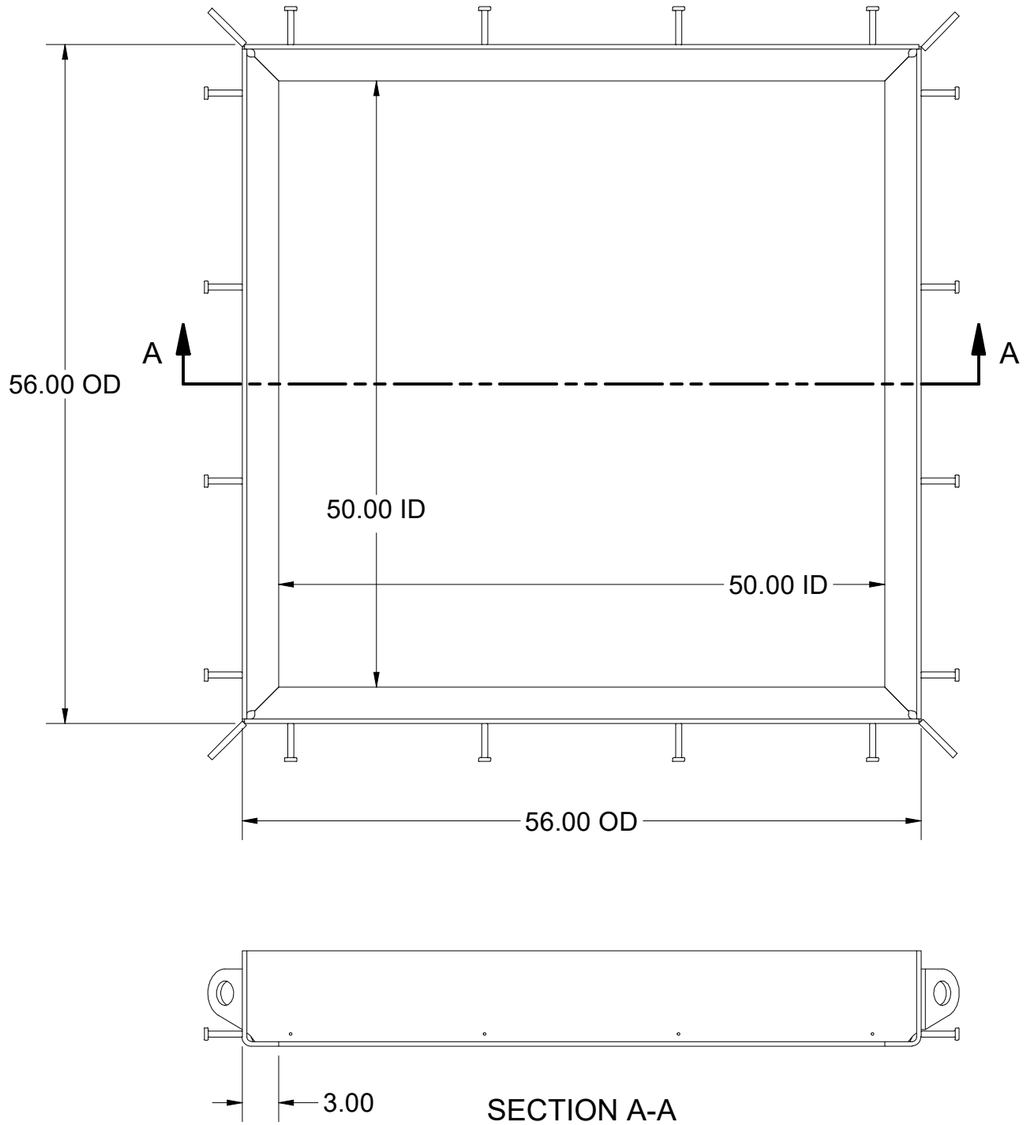

SECTION A-A
SCALE 0.08

100007482.idw

LOADING CRITERIA: ASTM C1802 Load Level 07

16,000 lb load on 10" x 20" footprint, with 33% impact for use in multi-lane roadways with a maximum posted speed limit of 70 miles per hour.

SURFACE:	Smooth	FINISH:	Galvanized
WEIGHT:	248.78 lbs	MARKING:	None

Infrastructure
JENSEN
527 Dunn Circle, Sparks, NV 89431
775-352-2716 FAX: 755-358-8127
JENSENMETALTECH.COM

©2025 Jensen Infrastructure - All rights reserved.
All materials appearing as Jensen Infrastructure documents and the like are proprietary work product and are protected under U.S. copyright and other laws. Unless in conjunction with business conducted with Jensen Infrastructure , any use of Jensen Infrastructure work product without express, written consent is prohibited, and recipient is prohibited from distributing any and all work product to non-approved third parties under penalty of civil action.
This product shall only be produced in a Jensen Infrastructure facility.

DESCRIPTION:	PLFAS-5050-HDO-G-OH08 50x50 Plug Frame Assembly (Loading Criteria Per ASTM C1802 Load Level 07, Steel, Drop In, Smooth, Galvanized) 08	REV:	A-1-1
PART NUMBER:	100007482	DRAWN BY:	C. Heywood
CREATED:	1/26/2023	MODIFIED:	7/14/2025
		SHEET:	1

BILL OF MATERIALS

ITEM	ITEM QTY	QTY	PART NUMBER	DESCRIPTION	PART NAME
1	2	119.244 lbmass	100007805	Frame Component Steel Frame End, Cast In	200102138
2	4	7.006 lbmass	100007806	PLUG COVER LIFTING EYE	200023157
3	16	16	100007886	STUD NELSON WELD H4L-HEADED A36 1/2X3-1/8	100007886
4	2	119.159 lbmass	100007805	Frame Component Steel Frame Side, Cast In	200102147

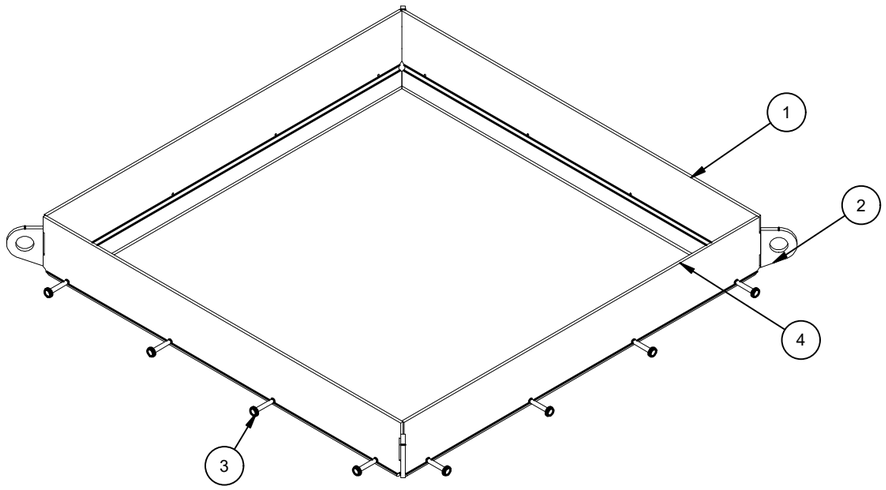

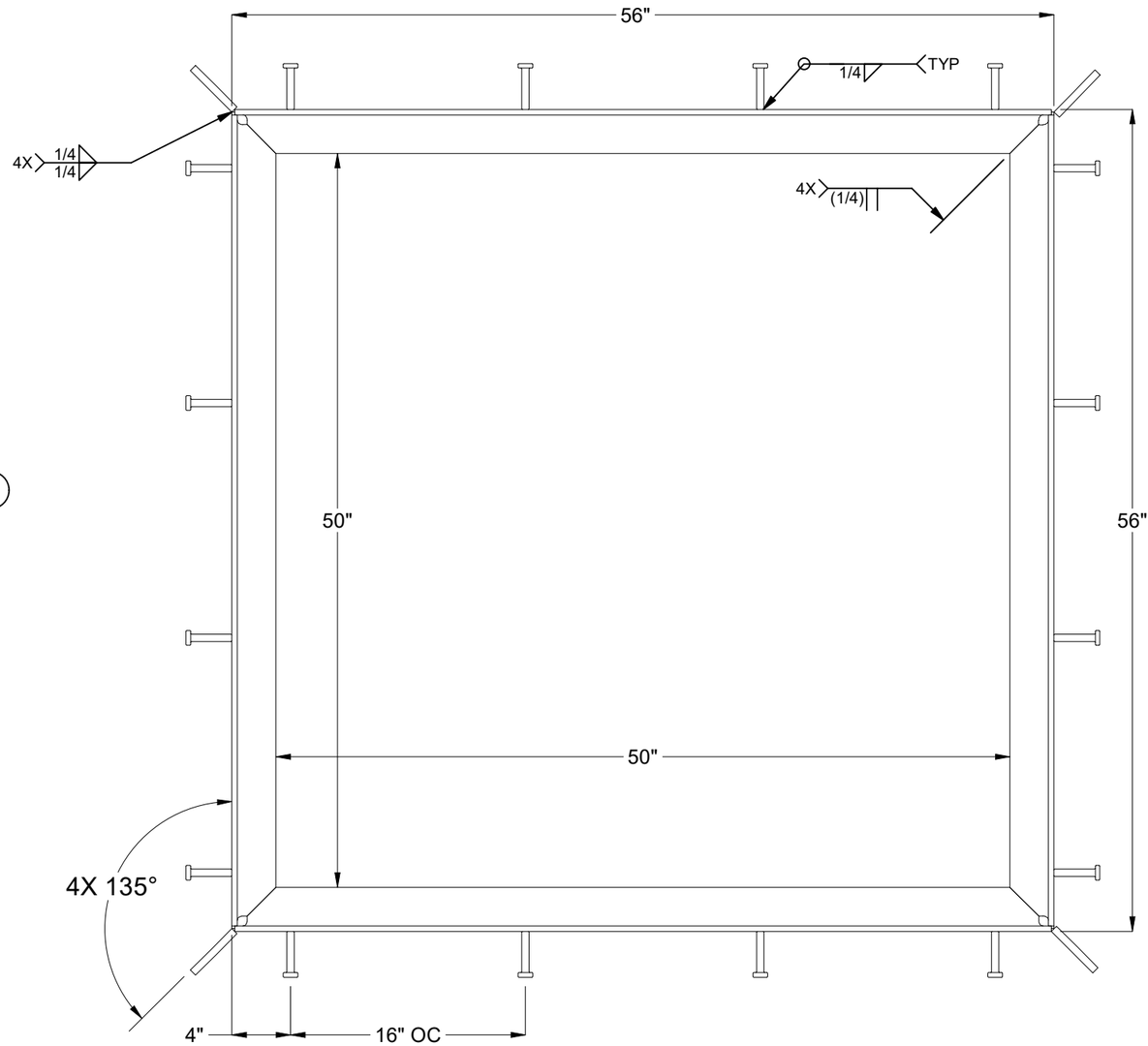

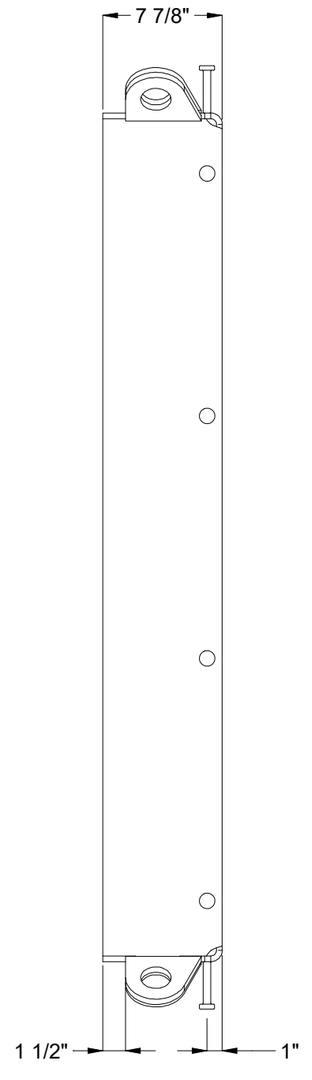

100007482.idw

REVISION HISTORY		
DESCRIPTION	DATE	REVISED BY
55290-1: UPDATED DESIGN TO INVENTOR. CLEANED UP FRAME AND UPDATED PARTS.	6/06/2025	C. HEYWOOD

MATERIAL FINISH: Galvanized

MATERIAL SURFACE: Smooth

Infrastructure JENSEN

527 Dunn Circle, Sparks, NV 89431
775-352-2716 FAX: 755-358-8127
JENSENMETALTECH.COM

©2025 Jensen Infrastructure - All rights reserved.
All materials appearing as Jensen Infrastructure documents and the like are proprietary work product and are protected under U.S. copyright and other laws. Unless in conjunction with business conducted with Jensen Infrastructure , any use of Jensen Infrastructure work product without express, written consent is prohibited, and recipient is prohibited from distributing any and all work product to non-approved third parties under penalty of civil action.
This product shall only be produced in a Jensen Infrastructure facility.

PART NUMBER & DESCRIPTION: 100007482 PLFAS-5050-HDO-G-OH08

REV: A-1-1

WEIGHT: 248.78 Lbs

DRAWN BY: C. Heywood

CREATED: 1/26/2023

MODIFIED: 7/14/2025

SHEET: 2

BURN LIST - BOM

PART NAME	ITEM QTY	QTY	DESCRIPTION	STOCK NUMBER	MATERIAL	MASS	SHEET
200102147	2	119.159 lbmass	Frame Component Steel Frame Side, Cast In	100007805	STL ASTM A36 SM-HRS RAW .375	59.527 lbmass	04
200102138	2	119.244 lbmass	Frame Component Steel Frame End, Cast In	100007805	STL ASTM A36 SM-HRS RAW .375	59.560 lbmass	05
200023157	4	7.006 lbmass	PLUG COVER LIFTING EYE	100007806	STL ASTM A36 SM-HRPO RAW .5	1.751 lbmass	06

100007482.idw

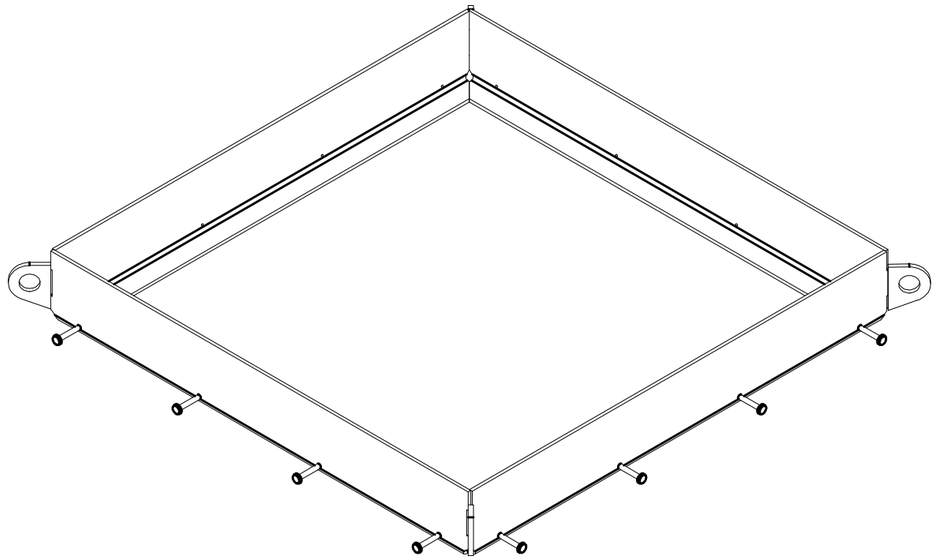

MATERIAL FINISH: Galvanized

MATERIAL SURFACE: Smooth

Infrastructure
JENSEN
527 Dunn Circle, Sparks, NV 89431
775-352-2716 FAX: 755-358-8127
JENSENMETALTECH.COM

©2025 Jensen Infrastructure - All rights reserved.
All materials appearing as Jensen Infrastructure documents and the like are proprietary work product and are protected under U.S. copyright and other laws. Unless in conjunction with business conducted with Jensen Infrastructure , any use of Jensen Infrastructure work product without express, written consent is prohibited, and recipient is prohibited from distributing any and all work product to non-approved third parties under penalty of civil action.
This product shall only be produced in a Jensen Infrastructure facility.

PART NUMBER & DESCRIPTION: 100007482 PLFAS-5050-HDO-G-OH08

REV: A-1-1

WEIGHT: 248.78 Lbs

DRAWN BY: C. Heywood

CREATED: 1/26/2023

MODIFIED: 7/14/2025

SHEET: 3

SYMMETRIC

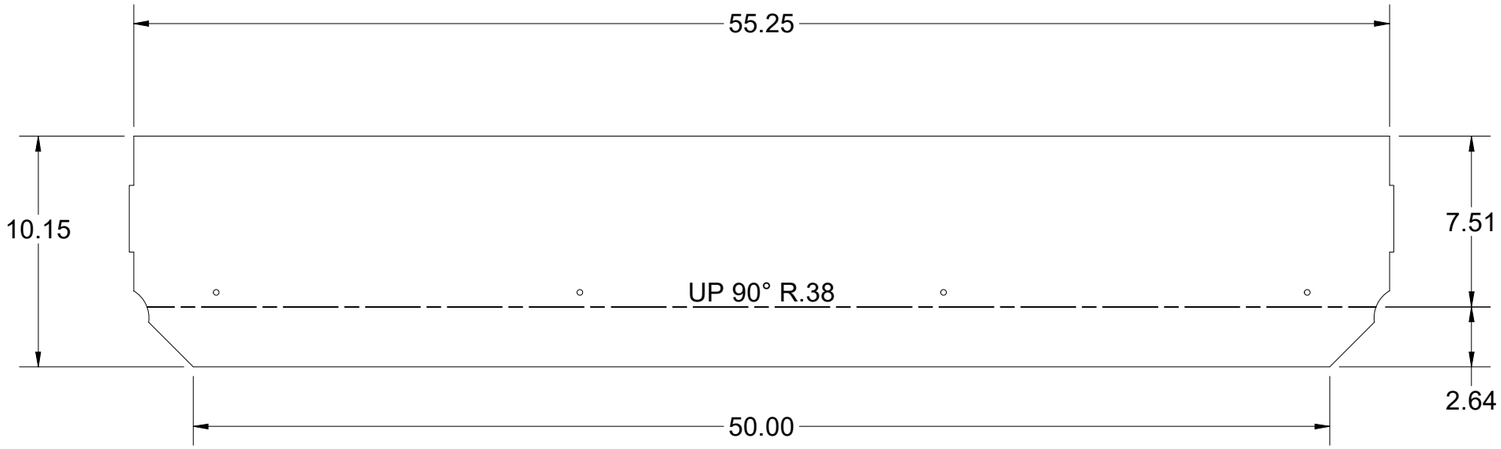

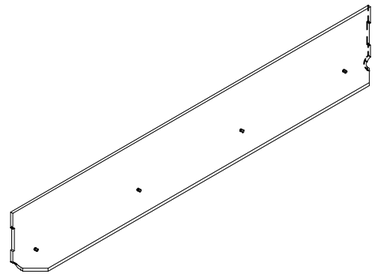

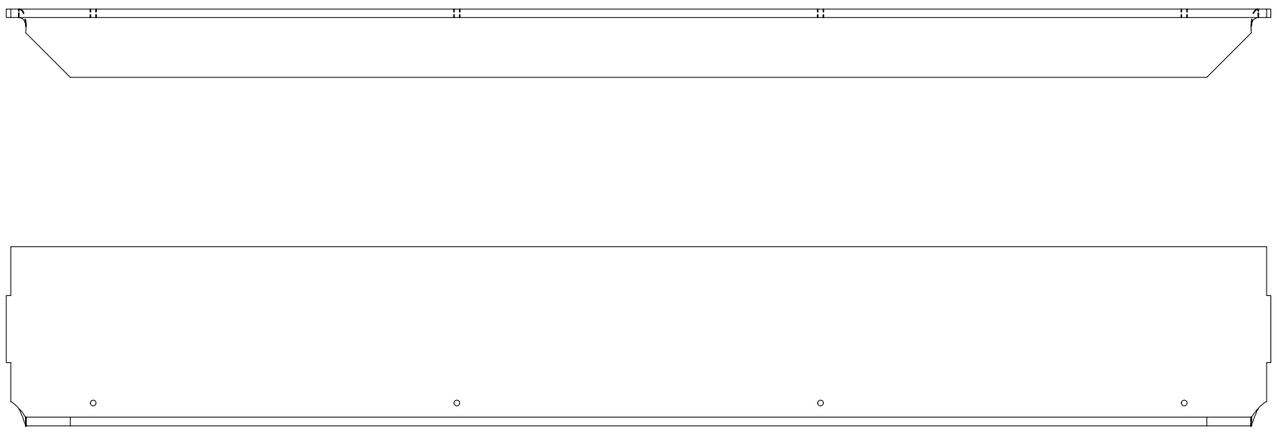

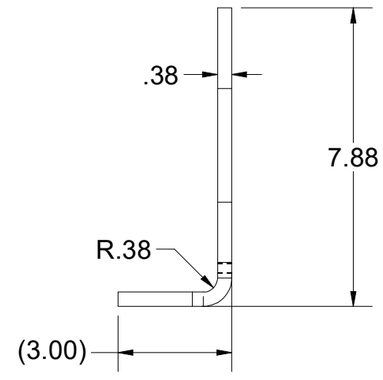

BEND TABLE			
BEND RADIUS	V-OPENING	BEND ANGLE	BEND DEDUCTION
0.375	4	90	0.73

MATERIAL IFS: 100007805

MATERIAL THK: 0.375

MAT DESCRIPTION: STL ASTM A36 SM-HRS RAW .375

Infrastructure JENSEN

527 Dunn Circle, Sparks, NV 89431
775-352-2716 FAX: 755-358-8127
JENSENMETALTECH.COM

©2025 Jensen Infrastructure - All rights reserved. All materials appearing as Jensen Infrastructure documents and the like are proprietary work product and are protected under U.S. copyright and other laws. Unless in conjunction with business conducted with Jensen Infrastructure , any use of Jensen Infrastructure work product without express, written consent is prohibited, and recipient is prohibited from distributing any and all work product to non-approved third parties under penalty of civil action. This product shall only be produced in a Jensen Infrastructure facility.

NAME & DESCRIPTION: 200102147 Frame Component Steel Frame Side, Cast In

REV: A-1-1

WEIGHT: 59.527 lbmass

DRAWN BY: C. Heywood

CREATED: 1/26/2023

MODIFIED: 7/14/2025

SHEET: 4 OF 6

100007482.idw

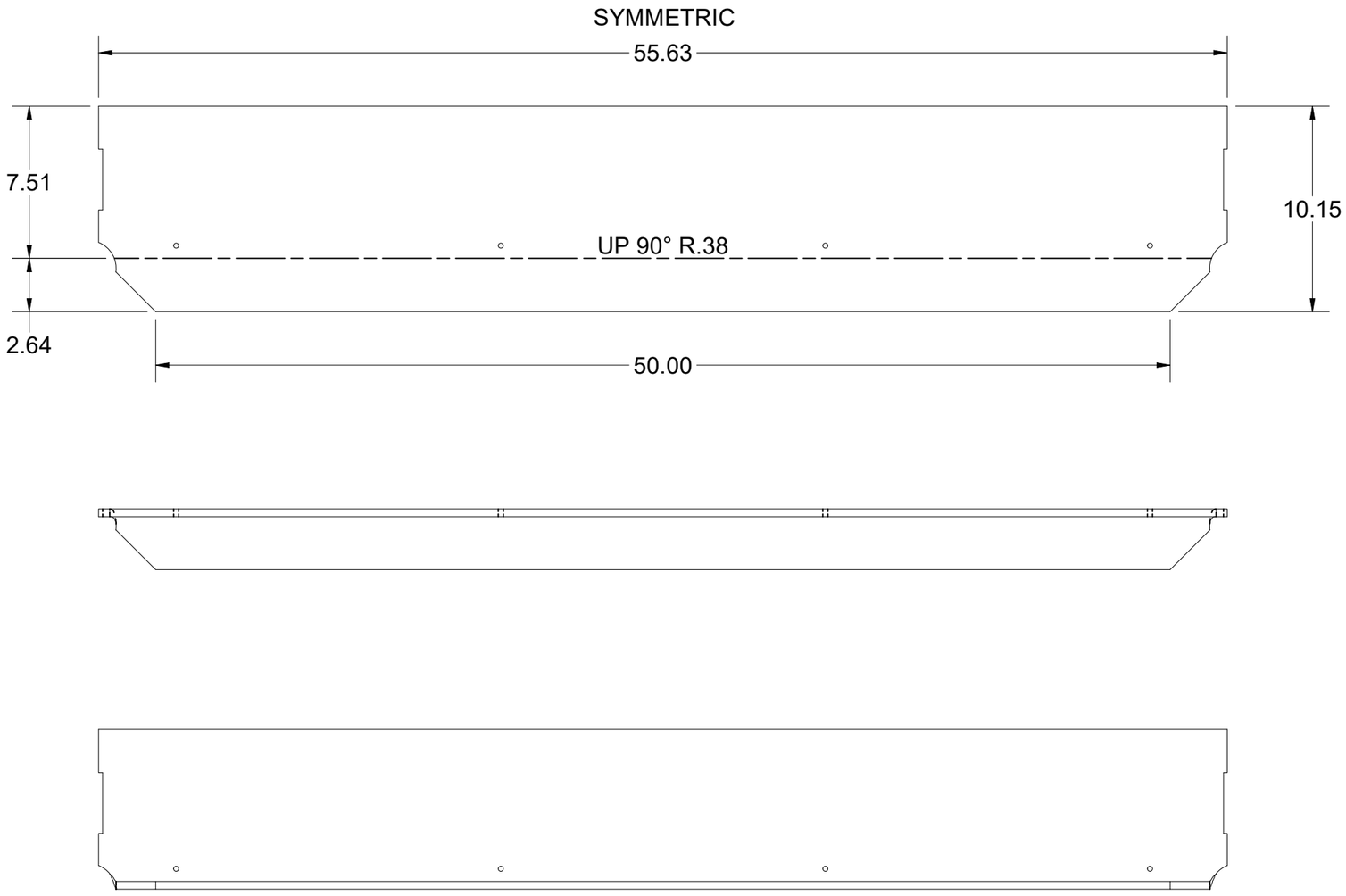

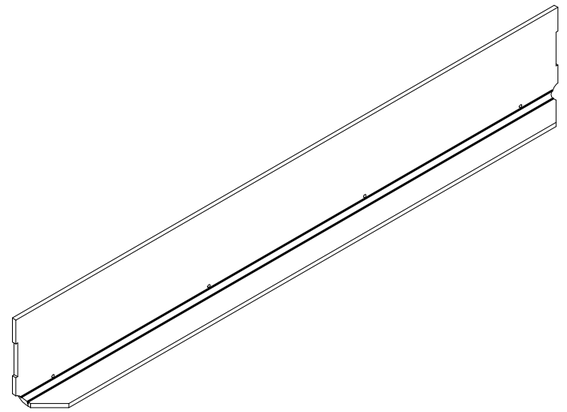

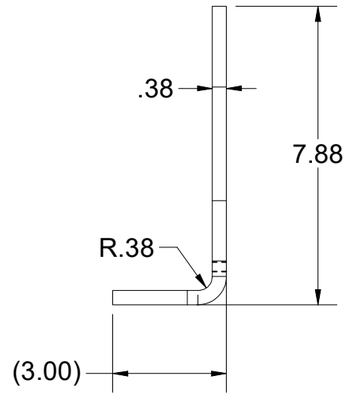

100007482.idw

BEND TABLE			
BEND RADIUS	V-OPENING	BEND ANGLE	BEND DEDUCTION
0.375	4	90	0.73

MATERIAL IFS: 100007805

MATERIAL THK: 0.375

MAT DESCRIPTION: STL ASTM A36 SM-HRS RAW .375

Infrastructure JENSEN
527 Dunn Circle, Sparks, NV 89431
775-352-2716 FAX: 755-358-8127
JENSENMETALTECH.COM

©2025 Jensen Infrastructure - All rights reserved.
All materials appearing as Jensen Infrastructure documents and the like are proprietary work product and are protected under U.S. copyright and other laws. Unless in conjunction with business conducted with Jensen Infrastructure , any use of Jensen Infrastructure work product without express, written consent is prohibited, and recipient is prohibited from distributing any and all work product to non-approved third parties under penalty of civil action.
This product shall only be produced in a Jensen Infrastructure facility.

NAME & DESCRIPTION: 200102138
Frame Component Steel Frame End, Cast In

REV: A-1-1

WEIGHT: 59.560 lbmass

DRAWN BY: C. Heywood

CREATED: 1/26/2023

MODIFIED: 7/14/2025

SHEET: 5 OF 6

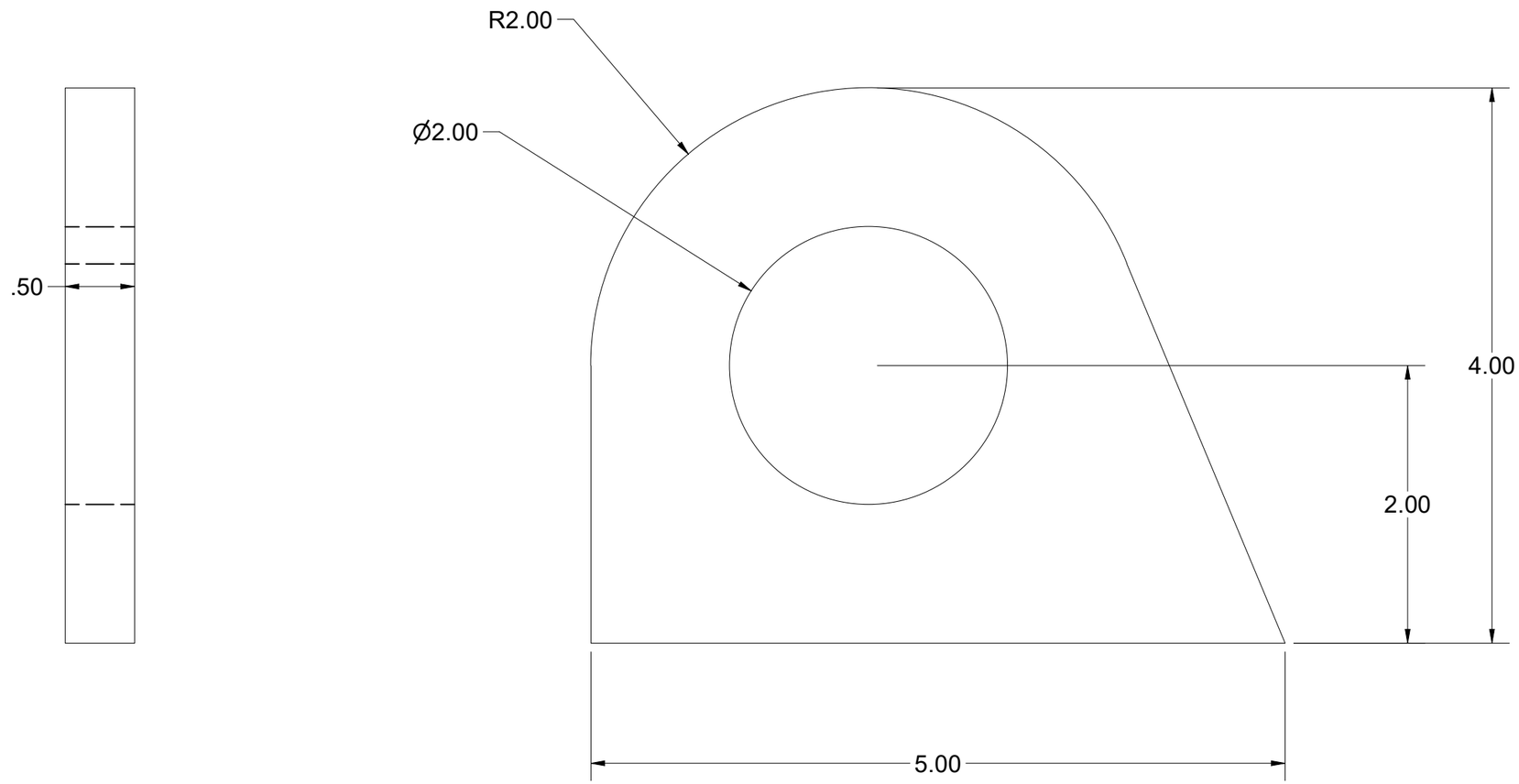

BEND TABLE				MATERIAL IFS: 100007806
BEND RADIUS	V-OPENING	BEND ANGLE	BEND DEDUCTION	MATERIAL THK: 0.5
-	-	-	-	MAT DESCRIPTION: STL ASTM A36 SM-HRPO RAW .5

Infrastructure JENSEN
527 Dunn Circle, Sparks, NV 89431
775-352-2716 FAX: 755-358-8127
JENSENMETALTECH.COM

©2025 Jensen Infrastructure - All rights reserved.
All materials appearing as Jensen Infrastructure documents and the like are proprietary work product and are protected under U.S. copyright and other laws. Unless in conjunction with business conducted with Jensen Infrastructure , any use of Jensen Infrastructure work product without express, written consent is prohibited, and recipient is prohibited from distributing any and all work product to non-approved third parties under penalty of civil action.
This product shall only be produced in a Jensen Infrastructure facility.

NAME & DESCRIPTION: 200023157 PLUG COVER LIFTING EYE		REV: A-1-1
WEIGHT: 1.751 lbmass	DRAWN BY: C. Heywood	SHEET: 6 OF 6
CREATED: 1/26/2023	MODIFIED: 7/14/2025	

100007482.idw