NOTES

- FOR COMPLETE DESIGN AND PRODUCT INFORMATION CONTACT JENSEN PRECAST.

BILL OF MATERIALS

ITEM	UNIT QTY	QTY	PART NUMBER	DESCRIPTION
1	25.742 ft^3	25.742 ft^3	100011425	CONCRETE MIX GENERIC 5000 PSI
2	1	3	100004880	ANCHOR UTILITY .671DIA 5.625-SLAB GALV P75 6UA671
3	1	1	200060283	REINFORCING MAT 200046213

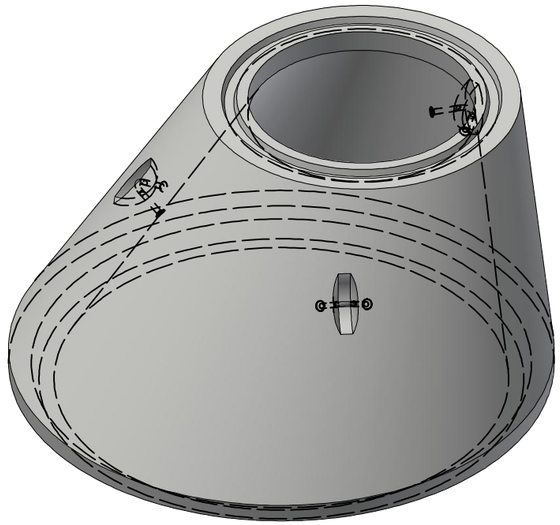

ISO VIEW

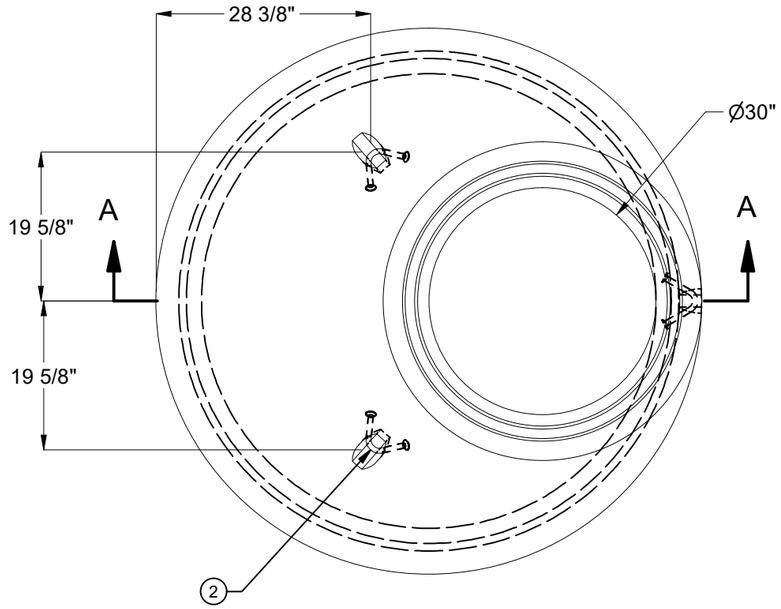

PLAN VIEW

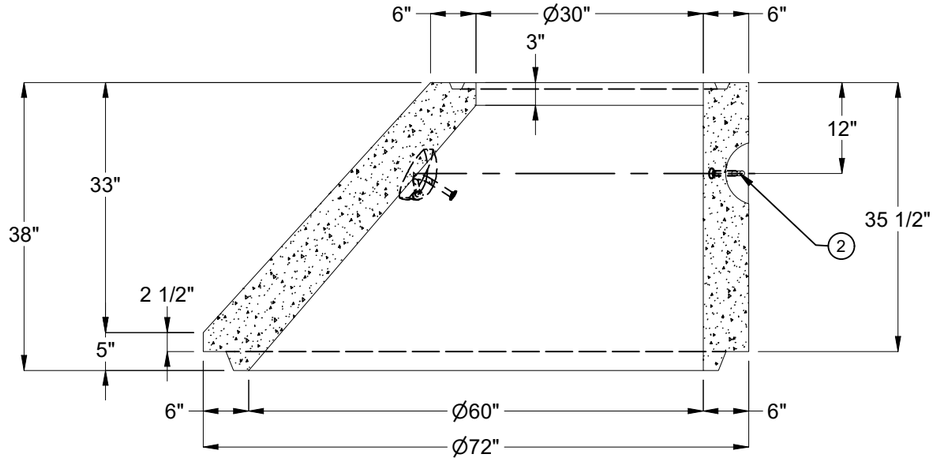

SECTION A-A

LIFTING NOTES

- THIS CONCRETE PRODUCT IS DESIGNED TO BE LIFTED AT 2500PSI WITH 3 LIFT CONNECTIONS EQUALLY LOADED TO 60 LIFTING POINTS AT A MINIMUM 60° SLING ANGLE, MEASURED FROM HORIZONTAL.

BURY DEPTH:	0.0' - 3.0' to Top		
WATER LEVEL:	Below Structure	APPROX. WEIGHT:	3892.16 Lbs
DESIGN SPEC:	ASTM C478	LOADING SPEC:	A-16 (AASHTO HS20-44)
REINFORCEMENT TYPE:	Plain Wire	LIFTING TYPE:	A-Anchor

JENSEN PRECAST EST. 1968

WWW.JENSENPRECAST.COM

©2022 Jensen Precast- All rights reserved.
All materials appearing as Jensen Precast documents and the like are proprietary work product and are protected under U.S. copyright and other laws.
Unless in conjunction with business conducted with Jensen Precast, any use of Jensen Precast work product without express, written consent is prohibited, and recipient is prohibited from distributing any and all work product to non-approved third parties under penalty of civil action.

REVISION HISTORY

REV	DESCRIPTION	DATE	BY
1	2202-52262	2-7-22	DCH

DESCRIPTION:	Manhole Cone Eccentric D6072 to D30 x 36IN GU CASTING LAYOUT		REV: B-2
PART NUMBER:	100007382	DRAWN BY: MLR	SHEET: 1 OF 2
CREATED:	10/26/2016	MODIFIED: 2/9/2022	

100007382.idw

- ALL CONCRETE TO HAVE A 28 DAY COMPRESSIVE STRENGTH OF 5000 PSI.
- REINFORCING STEEL SHALL COMPLY WITH ASTM A615 GRADE 60 OR ASTM A706 GRADE 60. BAR BENDING AND PLACEMENT SHALL COMPLY WITH THE LATEST ACI STANDARD. EQUIVALENT AREA WELDED WIRE REINFORCEMENT CAGES MAY BE UTILIZED IN LIEU OF GRADE 60 REINFORCING BARS.
- WELDED WIRE REINFORCEMENT SHALL COMPLY WITH ASTM A1064 GRADE 80 STANDARDS
- LIFTING INSERTS FOR HANDLING SHALL BE INSTALLED PER MANUFACTURER'S REQUIREMENTS.
- BURY DEPTH 0.0' - 3.0' TO Top
- WATER LEVEL: Below Structure
- DESIGN SPECIFICATION: ASTM C478
- LOADING SPECIFICATION: A-16 (AASHTO HS20-44)
- SOIL UNIT WEIGHT DRY - 110 lbs/cu.ft.
- EQUIVALENT LATERAL PRESSURE DRY - 40 lbs/cu.ft.
- SOIL UNIT WEIGHT WET - 120 lbs/cu.ft.
- EQUIVALENT LATERAL PRESSURE WET - 80 lbs/cu.ft.

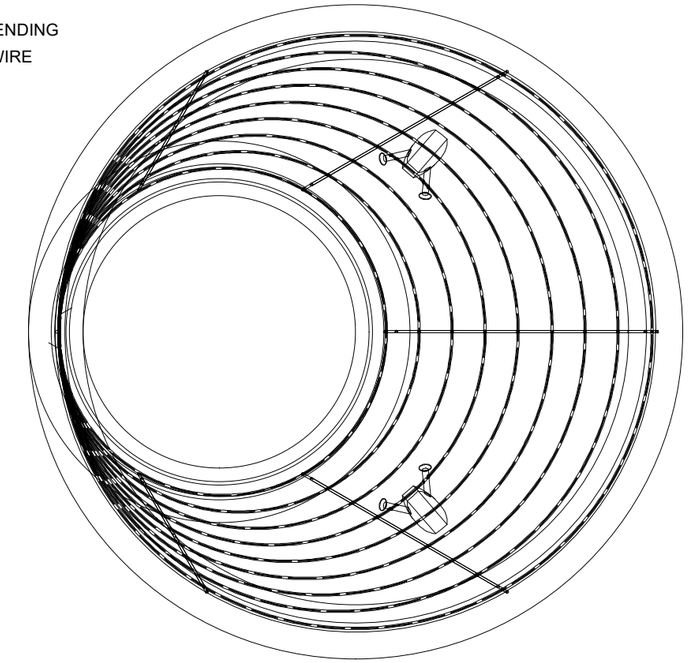

PLAN VIEW

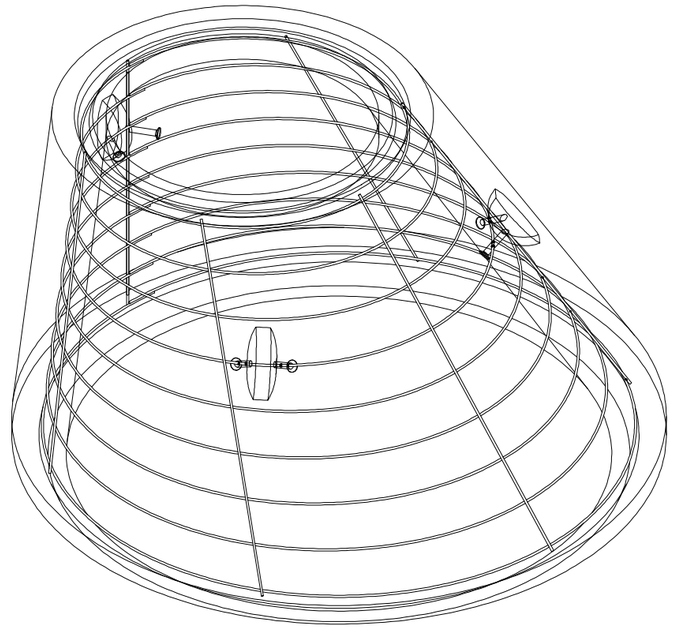

ISO REF

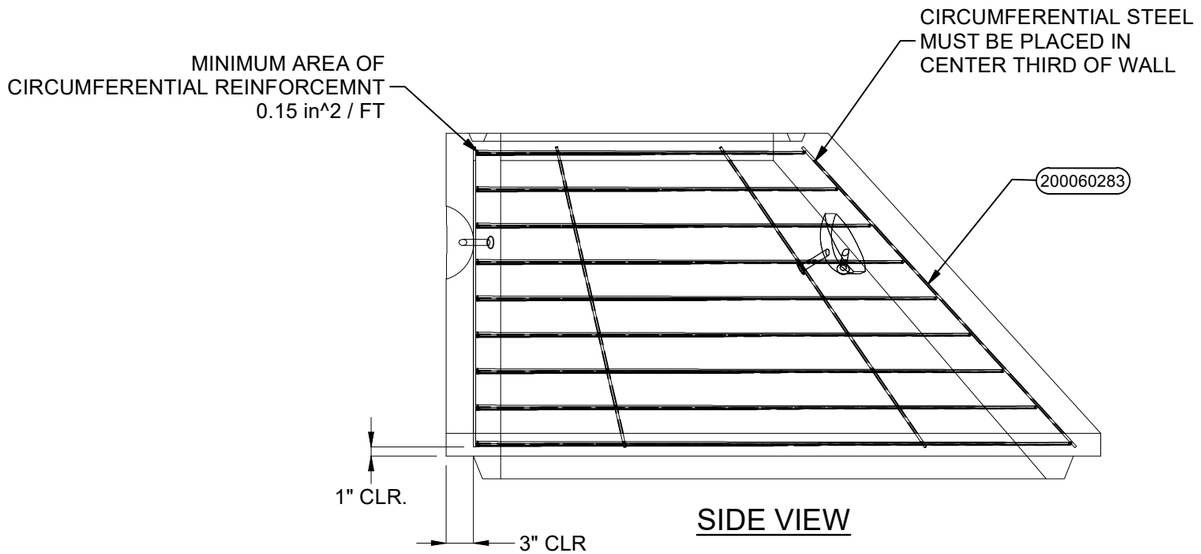

SIDE VIEW

BURY DEPTH:	0.0' - 3.0' to Top		
WATER LEVEL:	Below Structure	APPROX. WEIGHT:	3892.16 Lbs
DESIGN SPEC:	ASTM C478	LOADING SPEC:	A-16 (AASHTO HS20-44)
REINFORCEMENT TYPE:	Plain Wire	LIFTING TYPE:	A-Anchor

JENSEN PRECAST EST. 1968

WWW.JENSENPRECAST.COM

©2022 Jensen Precast- All rights reserved.
All materials appearing as Jensen Precast documents and the like are proprietary work product and are protected under U.S. copyright and other laws.
Unless in conjunction with business conducted with Jensen Precast, any use of Jensen Precast work product without express, written consent is prohibited, and recipient is prohibited from distributing any and all work product to non-approved third parties under penalty of civil action.

DESCRIPTION:	Manhole Cone Eccentric D6072 to D30 x 36IN GU Reinf Ref		
PART NUMBER:	100007382	DRAWN BY:	MLR
CREATED:	10/26/2016	MODIFIED:	2/9/2022

REV: B-2

SHEET: 2 OF 2

100007382.idw