NOTES
■ FOR COMPLETE DESIGN AND PRODUCT INFORMATION CONTACT JENSEN PRECAST.

BILL OF MATERIALS

ITEM	UNIT QTY	QTY	PART NUMBER	DESCRIPTION
1	10.138 ft^3	10.138 ft^3	100002728	CONCRETE MIX GENERIC 4000 PSI
2	1	6	100002854	INSERT MH RUNG PLASTIC SP SOCKET
3	1	1	200064343	REINFORCING MAT 200064343

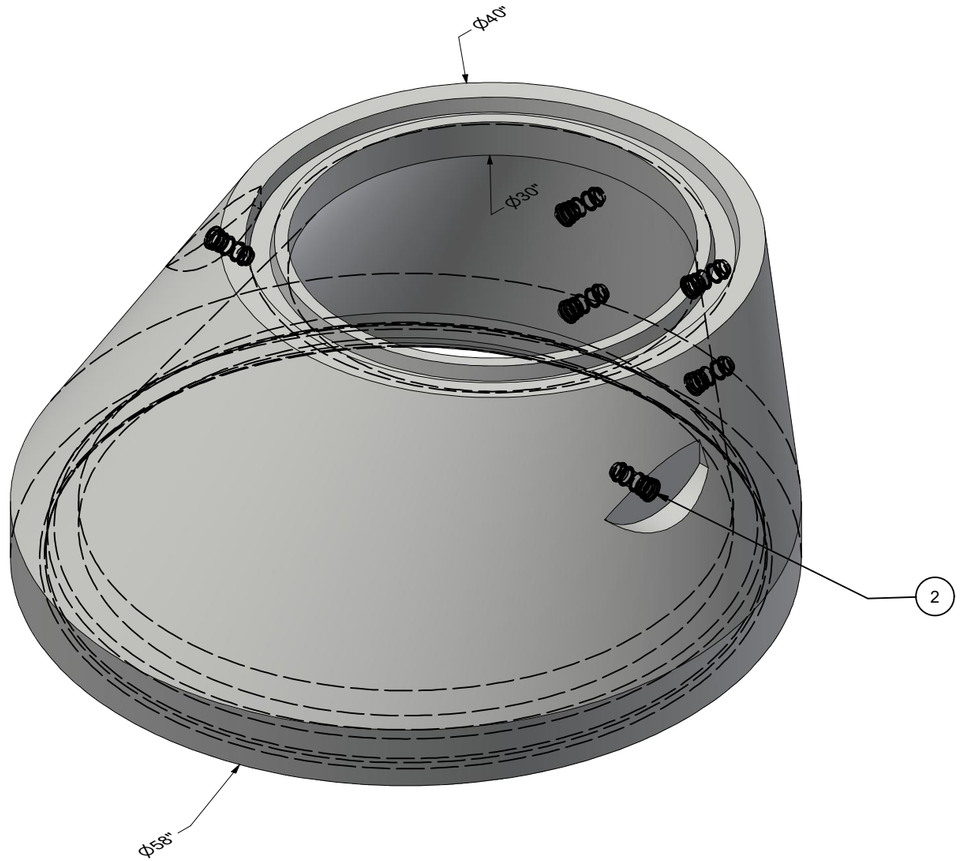

ISO REF

100007147.idw

LIFTING NOTES
■ THIS CONCRETE PRODUCT IS DESIGNED TO BE LIFTED AT 2500PSI WITH 2 LIFT CONNECTIONS EQUALLY LOADED TO 2 LIFTING POINTS AT A MINIMUM 90° SLING ANGLE, MEASURED FROM HORIZONTAL.

BURY DEPTH:	0.0' - 3.0' to Top		
WATER LEVEL:	0.0'	APPROX. WEIGHT:	1669.28 Lbs
DESIGN SPEC:	ASTM C478	LOADING SPEC:	A-16 (AASHTO HS20-44)
REINFORCEMENT TYPE:	WWR Plain	LIFTING TYPE:	SP Socket

JENSEN PRECAST EST. 1968

WWW.JENSENPRECAST.COM

©2022 Jensen Precast- All rights reserved.
All materials appearing as Jensen Precast documents and the like are proprietary work product and are protected under U.S. copyright and other laws.
Unless in conjunction with business conducted with Jensen Precast, any use of Jensen Precast work product without express, written consent is prohibited, and recipient is prohibited from distributing any and all work product to non-approved third parties under penalty of civil action.

CHANGE HISTORY

NO.	DESCRIPTION	DATE	BY
1	2005-19803-SCA	8-19-21	
2	COMPLETE DRAWING AND REINFORCING CAGE	5-5-22	DCH

DESCRIPTION:	Manhole Cone Eccentric D4858 to D30 x 24IN TU Step Holes CASTING LAYOUT		REV: B-1
PART NUMBER:	100007147	DRAWN BY:	MLR
CREATED:	6/3/2020	MODIFIED:	5/9/2022
			SHEET: 1 OF 2

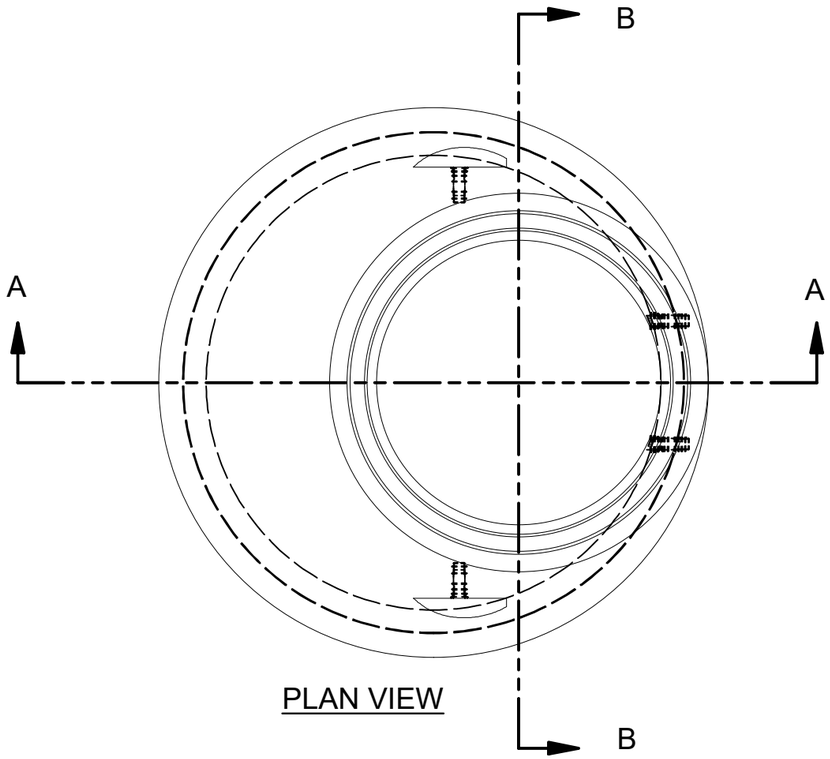

PLAN VIEW

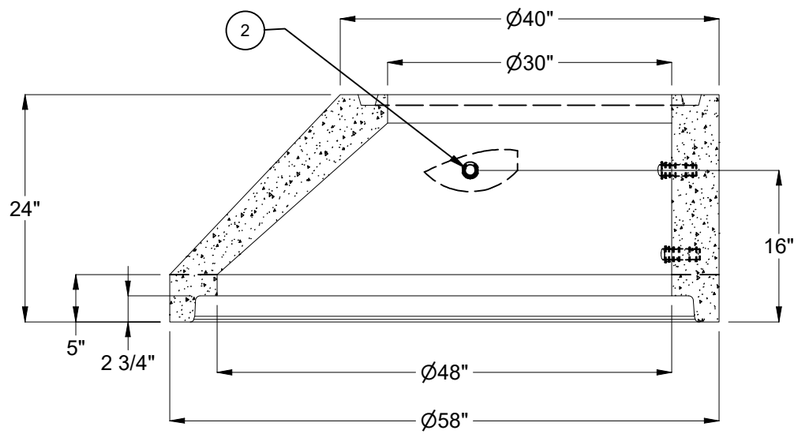

SECTION A-A

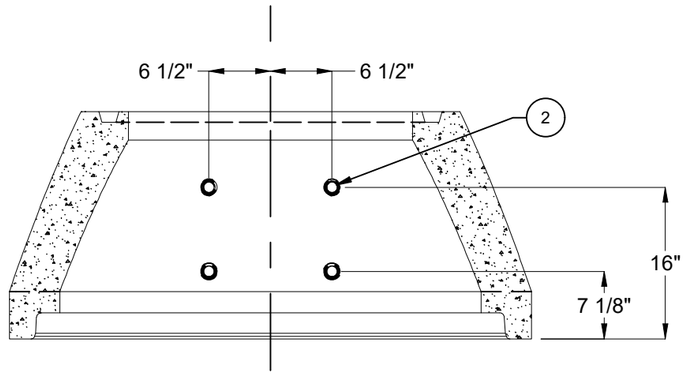

SECTION B-B

BURY DEPTH:	0.0' - 3.0' to Top		
WATER LEVEL:	0.0'	APPROX. WEIGHT:	1669.28 Lbs
DESIGN SPEC:	ASTM C478	LOADING SPEC:	A-16 (AASHTO HS20-44)
REINFORCEMENT TYPE:	WWR Plain	LIFTING TYPE:	SP Socket

JENSEN PRECAST EST. 1968

WWW.JENSENPRECAST.COM

©2022 Jensen Precast- All rights reserved.
All materials appearing as Jensen Precast documents and the like are proprietary work product and are protected under U.S. copyright and other laws.
Unless in conjunction with business conducted with Jensen Precast, any use of Jensen Precast work product without express, written consent is prohibited, and recipient is prohibited from distributing any and all work product to non-approved third parties under penalty of civil action.

DESCRIPTION: Manhole Cone Eccentric D4858 to D30 x 24IN TU Step Holes

CASTING DRAWING

PART NUMBER:	100007147	DRAWN BY:	MLR
CREATED:	6/3/2020	MODIFIED:	5/9/2022

REV: B-1

SHEET: 2 OF 2

100007147.idw