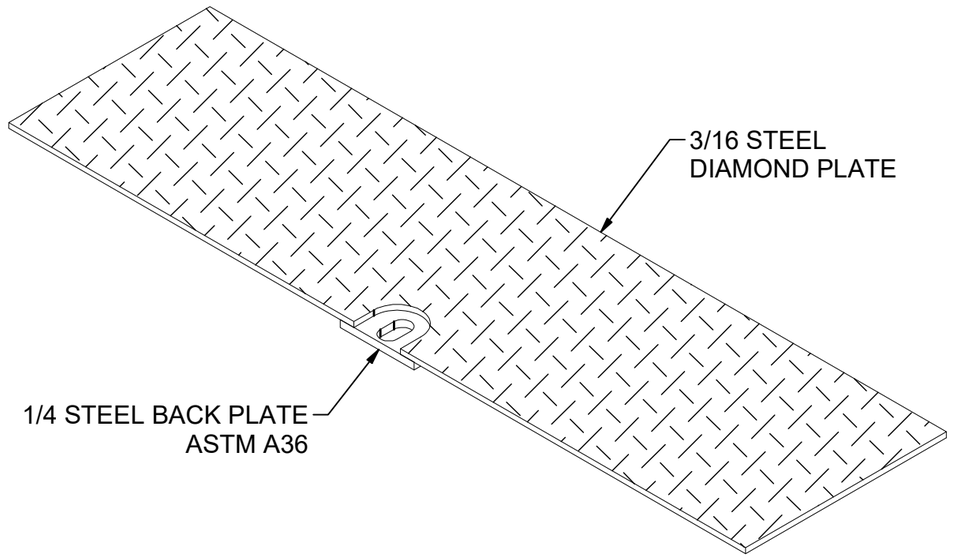

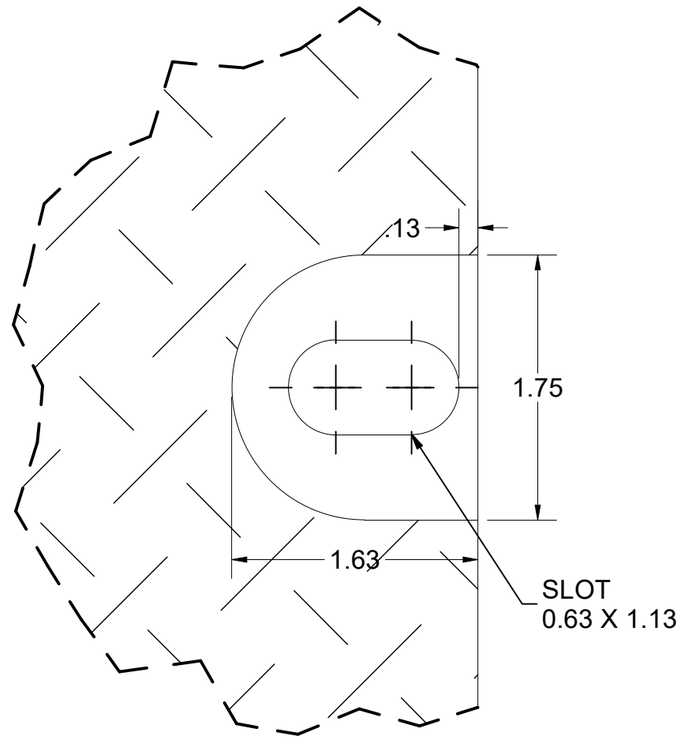

DETAIL A
SCALE 1 : 1

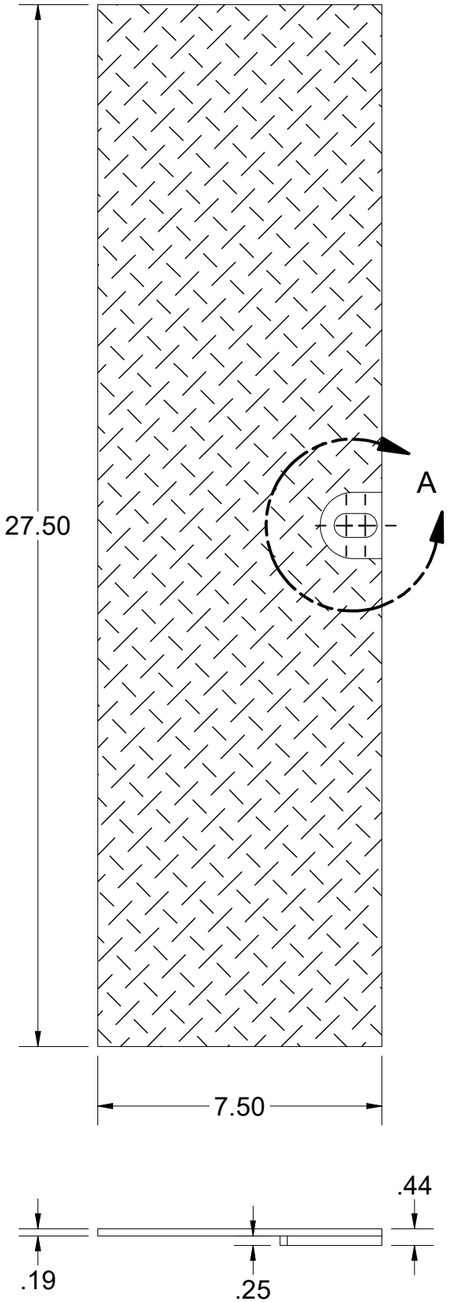

100006792.idw

LOADING CRITERIA: Level X

Customer Designed - Jensen Metaltech / Jensen Precast assumes no responsibility that cover is suitable for loading condition and application.

SURFACE:	Diamond Plate	FINISH:	Galvanized
WEIGHT:	12.4 lbs	MARKING:	

JENSEN METALTECH
450 E. GLENDALE AVE. SPARKS. NV 89431
775-352-2716 FAX: 755-358-8127
JENSENMETALTECH.COM

©2024 Jensen Precast- All rights reserved. All materials appearing as Jensen Precast documents and the like are proprietary work product and are protected under U.S. copyright and other laws. Unless in conjunction with business conducted with Jensen Precast, any use of Jensen Precast work product without express, written consent is prohibited, and recipient is prohibited from distributing any and all work product to non-approved third parties under penalty of civil action.

DESCRIPTION:	K711 TRANS PAD STEEL ADAPTER PT GALV	REV:	A
	K711 TRANS PAD STEEL ADAPTER PT GALV	SHEET:	1
PART NUMBER:	100006792	DRAWN BY:	R. Dohr
CREATED:	6/24/2024	MODIFIED:	7/23/2024

BILL OF MATERIALS

ITEM	ITEM QTY	QTY	PART NUMBER	DESCRIPTION	PART NAME
1	1	11.949 lbmass	100007814	Door Component Steel Plate, Top	200090189
2	1	1	100009409	BOLT DOUBLER GUSSET FONT	100009409

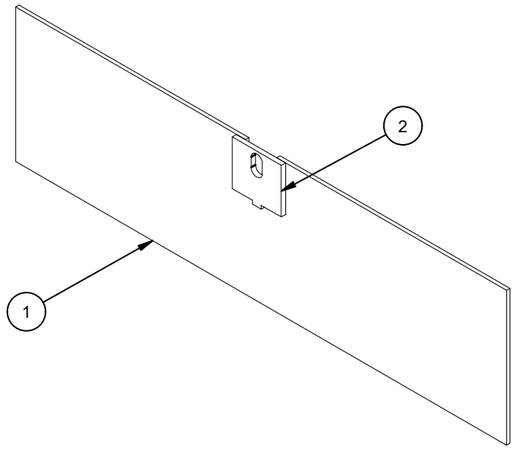

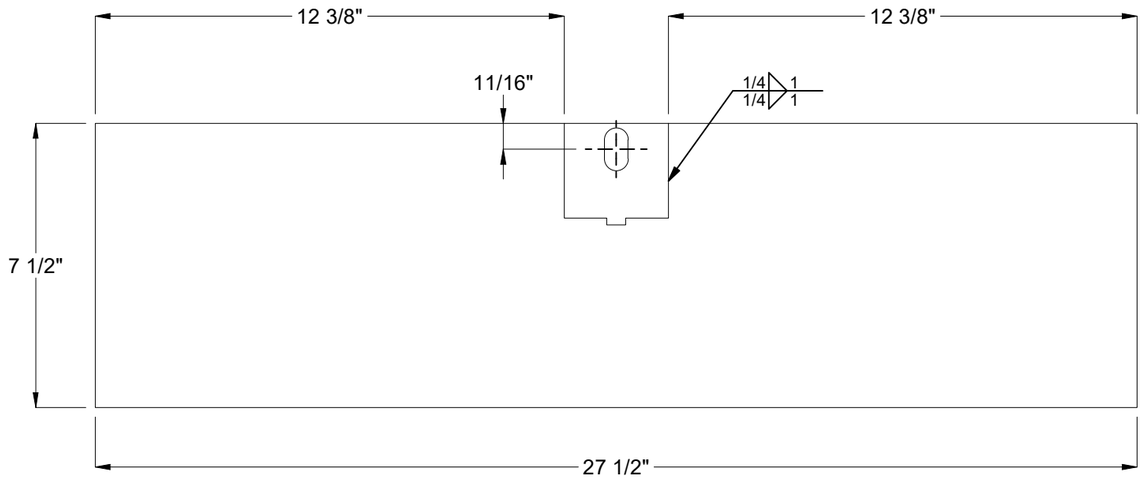

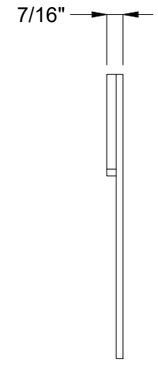

REVISION HISTORY	
DESCRIPTION	DATE
ECR 56995-2 CONVERTED TO INVENTOR AND REMOVED WELD CALLOUT	6/24/2024

MATERIAL FINISH: Galvanized

MATERIAL SURFACE: Diamond Plate

JENSEN METALTECH

450 E. GLENDALE AVE. SPARKS. NV 89431
775-352-2716 FAX: 755-358-8127
JENSENMETALTECH.COM

©2024 Jensen Precast- All rights reserved. All materials appearing as Jensen Precast documents and the like are proprietary work product and are protected under U.S. copyright and other laws. Unless in conjunction with business conducted with Jensen Precast, any use of Jensen Precast work product without express, written consent is prohibited, and recipient is prohibited from distributing any and all work product to non-approved third parties under penalty of civil action.

PART NUMBER & DESCRIPTION: 100006792 K711 TRANS PAD STEEL ADAPTER PT GALV

REV: A

WEIGHT: 12.4 Lbs

DRAWN BY: R. Dohr

SHEET: 2

CREATED: 6/24/2024

MODIFIED: 7/23/2024

100006792.idw

BURN LIST - BOM

PART NAME	ITEM QTY	QTY	DESCRIPTION	STOCK NUMBER	MATERIAL	MASS	SHEET
200090189	1	11.949 lbmass	Door Component Steel Plate, Top	100007814	SHT STL CQ DP RAW .1875	11.949 lbmass	04

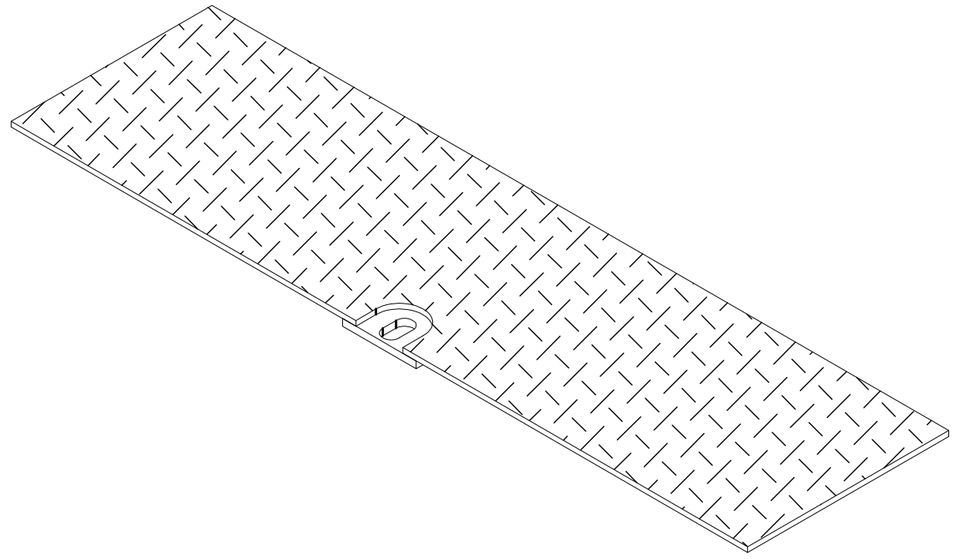

100006792.idw

MATERIAL FINISH: Galvanized

MATERIAL SURFACE: Diamond Plate

JENSEN METALTECH

450 E. GLENDALE AVE. SPARKS. NV 89431
775-352-2716 FAX: 755-358-8127
JENSENMETALTECH.COM

©2024 Jensen Precast- All rights reserved.
All materials appearing as Jensen Precast documents and the like are proprietary work product and are protected under U.S. copyright and other laws.
Unless in conjunction with business conducted with Jensen Precast, any use of Jensen Precast work product without express, written consent is prohibited, and recipient is prohibited from distributing any and all work product to non-approved third parties under penalty of civil action.

PART NUMBER & DESCRIPTION: 100006792 K711 TRANS PAD STEEL ADAPTER PT GALV

REV: A

WEIGHT: 12.4 Lbs

DRAWN BY: R. Dohr

SHEET: 3

CREATED: 6/24/2024

MODIFIED: 7/23/2024

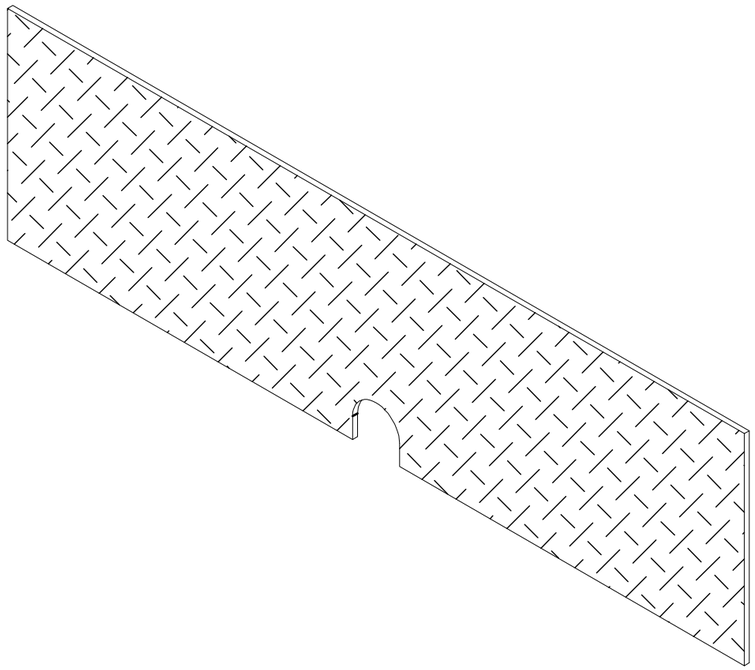

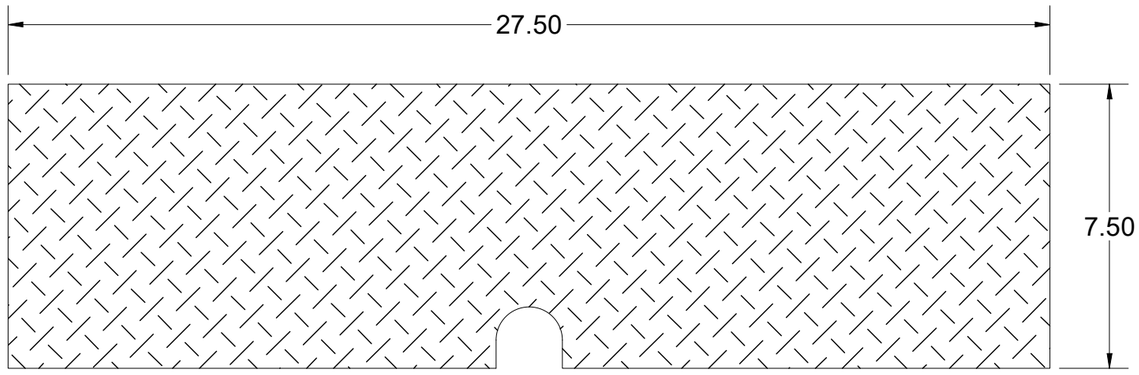

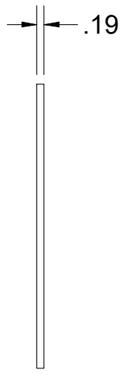

100006792.idw

BEND TABLE				MATERIAL IFS: 100007814
BEND RADIUS	V-OPENING	BEND ANGLE	BEND DEDUCTION	MATERIAL THK: 0.1875
-	-	-	-	MAT DESCRIPTION: SHT STL CQ DP RAW .1875

JENSEN METALTECH
450 E. GLENDALE AVE. SPARKS. NV 89431
775-352-2716 FAX: 755-358-8127
JENSENMETALTECH.COM

©2024 Jensen Precast- All rights reserved.
All materials appearing as Jensen Precast documents and the like are proprietary work product and are protected under U.S. copyright and other laws.
Unless in conjunction with business conducted with Jensen Precast, any use of Jensen Precast work product without express, written consent is prohibited, and recipient is prohibited from distributing any and all work product to non-approved third parties under penalty of civil action.

NAME & DESCRIPTION: 200090189 Door Component Steel Plate, Top		REV: A
WEIGHT: 11.949 lbmass	DRAWN BY: R. Dohr	SHEET: 4 OF 4
CREATED: 6/24/2024	MODIFIED: 7/23/2024	