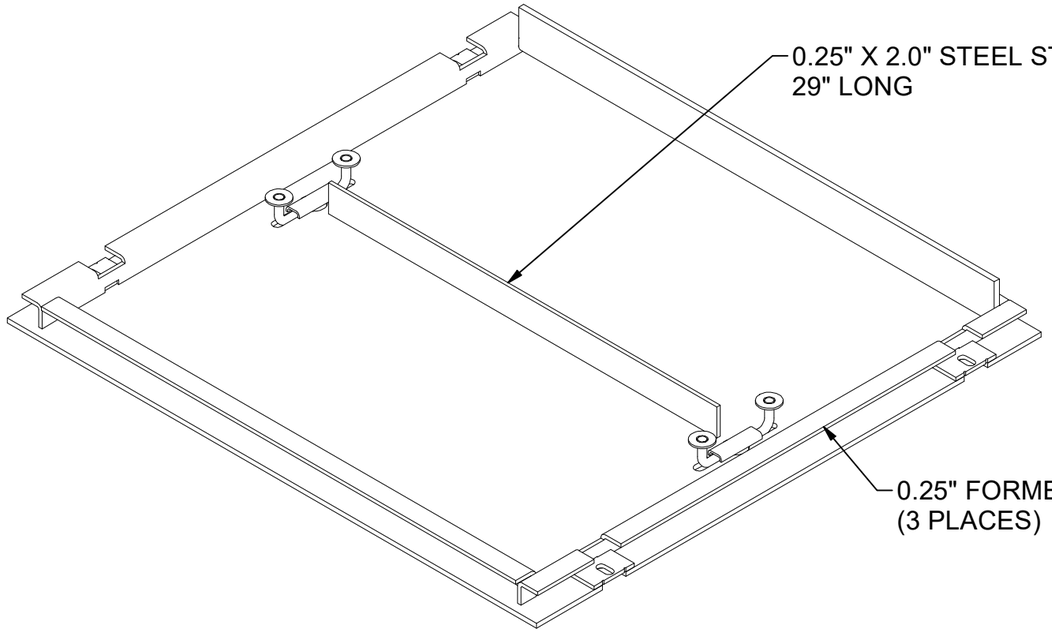

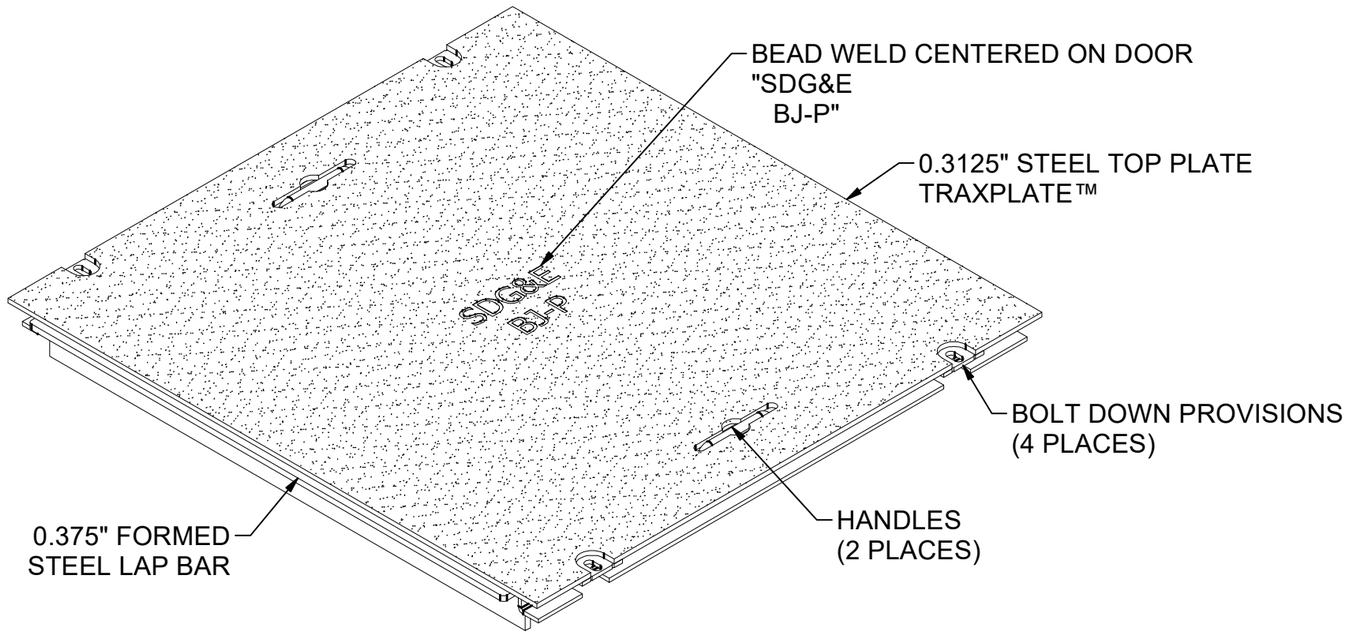

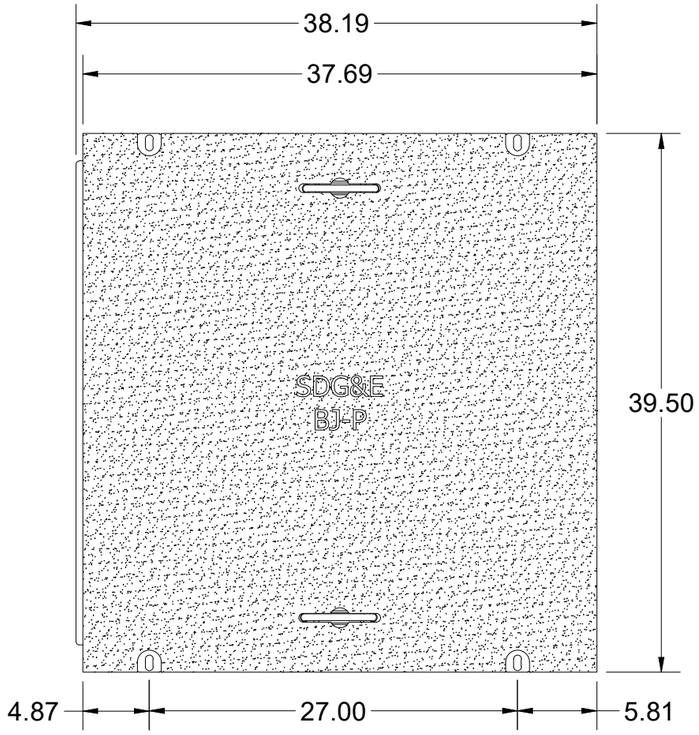

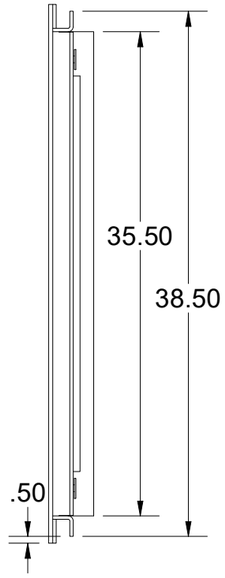

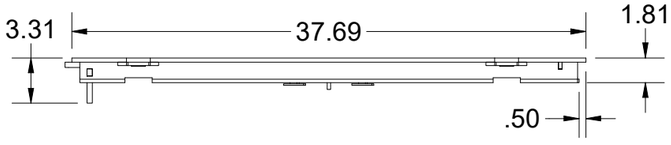

ASTM C1802: Level X

Customer Designed - Jensen Metaltech / Jensen Precast assumes no responsibility that cover is suitable for loading condition and application.

SURFACE:	TraxPlate™	FINISH:	Galvanized
WEIGHT:	173.15 lbs	MARKING:	None

JENSEN METALTECH
450 E. GLENDALE AVE. SPARKS. NV 89431
775-352-2716 FAX: 755-358-8127
JENSENMETALTECH.COM

©2020 Jensen Precast- All rights reserved. All materials appearing as Jensen Precast documents and the like are proprietary work product and are protected under U.S. copyright and other laws.
Unless in conjunction with business conducted with Jensen Precast, any use of Jensen Precast work product without express, written consent is prohibited, and recipient is prohibited from distributing any and all work product to non-approved third parties under penalty of civil action.

DESCRIPTION:	DAS1-B-3672-DX-TRX-G-FONT-BW-SDG&E BJ-P-(SC3672-PSRGV-1010) 36x72 Door Assembly (ASTM Load Level X, Bottom Door, Steel, Drag Off, Handle (2 Per Door), TraxPlate™, Galvanized , N/A, N/A (SC3672-PSRGV-1010))	REV:	A
PART NUMBER:	100006665	DRAWN BY:	M. Harris
CREATED:	1/28/2020	MODIFIED:	2/11/2020
		SHEET:	1

100006665.idw

BILL OF MATERIALS

ITEM	UNIT QTY	QTY	PART NUMBER	DESCRIPTION
1	1	1	100006666	DAS1-B-3672-DX-TRX-R-FONT

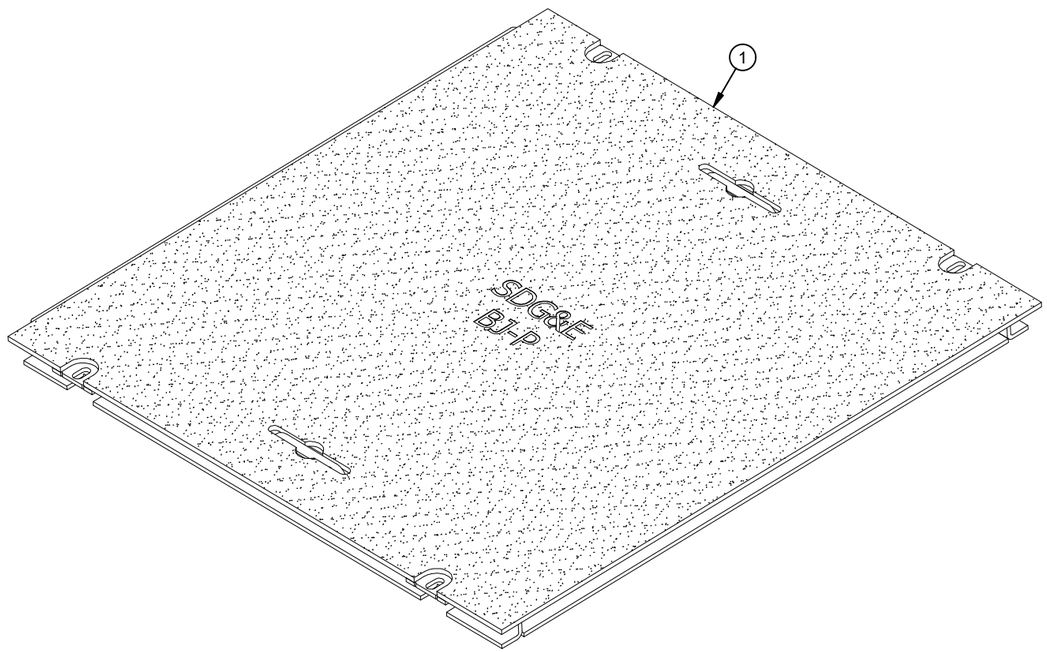

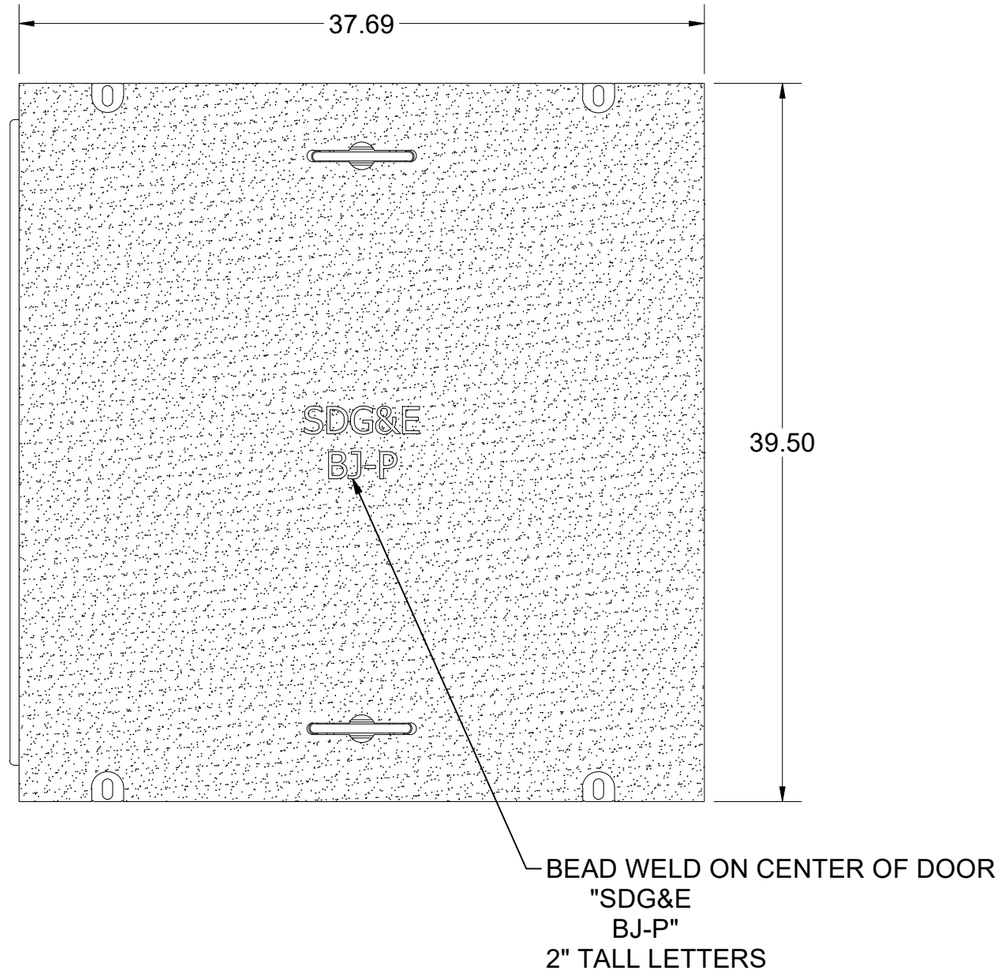

100006665.idw

MATERIAL FINISH: Galvanized	JENSEN METALTECH 450 E. GLENDALE AVE. SPARKS. NV 89431 775-352-2716 FAX: 755-358-8127 *JENSENMETALTECH.COM*	©2020 Jensen Precast- All rights reserved. All materials appearing as Jensen Precast documents and the like are proprietary work product and are protected under U.S. copyright and other laws. Unless in conjunction with business conducted with Jensen Precast, any use of Jensen Precast work product without express, written consent is prohibited, and recipient is prohibited from distributing any and all work product to non-approved third parties under penalty of civil action.	PART NUMBER & DESCRIPTION: 100006665 DAS1-B-3672-DX-TRX-G-FONT-BW-SDG&E BJ-P-(SC3672-PSRGV-1010)	REV: A
MATERIAL SURFACE: TraxPlate™			WEIGHT: N/A CREATED: 1/28/2020	DRAWN BY: M. Harris MODIFIED: 2/11/2020	SHEET: 2

BURN LIST - BOM

ITEM QTY	PART NUMBER	DESCRIPTION	STOCK NUMBER	MATERIAL	MASS
1	200035116	Door Component 0.3125in A36 Steel Plate, Top 36x72 Level X (Customer Designed)	100007838	STL ASTM A36 SM-HRPO RAW .3125	130.237 lbmass
1	200035117	Door Component 0.25in A36 Steel Perimeter Rail 36x72 Level X (Customer Designed)	100007735	STL ASTM A36 SM-HRPO RAW .250	6.662 lbmass
1	200035118	Door Component 0.25in A36 Steel Perimeter Rail 36x72 Level X (Customer Designed)	100007735	STL ASTM A36 SM-HRPO RAW .250	6.347 lbmass
1	200035119	Door Component 0.25in A36 Steel Stiffener, Bar 36x72 Level X (Customer Designed)	100007735	STL ASTM A36 SM-HRPO RAW .250	4.118 lbmass
4	200024684	Bolt Doubler 1.75" WIDE	100007735	STL ASTM A36 SM-HRPO RAW .250	0.341 lbmass
1	200035121	Door Component 0.25in A36 Steel Perimeter Rail 36x72 Level X (Customer Designed)	100007735	STL ASTM A36 SM-HRPO RAW .250	6.347 lbmass
1	200035120	Door Component 0.375in A36 Steel Lap Bar 36x72 Level X (Customer Designed)	100007805	STL ASTM A36 SM-HRS RAW .375	16.798 lbmass

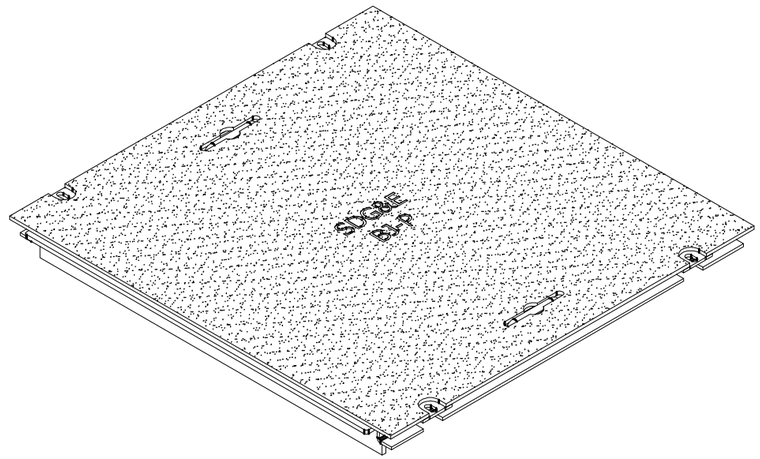

100006665.idw

MATERIAL FINISH: Galvanized

MATERIAL SURFACE: TraxPlate™

JENSEN METALTECH
450 E. GLENDALE AVE. SPARKS. NV 89431
775-352-2716 FAX: 755-358-8127
JENSENMETALTECH.COM

©2020 Jensen Precast- All rights reserved.
All materials appearing as Jensen Precast documents and the like are proprietary work product and are protected under U.S. copyright and other laws.
Unless in conjunction with business conducted with Jensen Precast, any use of Jensen Precast work product without express, written consent is prohibited, and recipient is prohibited from distributing any and all work product to non-approved third parties under penalty of civil action.

PART NUMBER & DESCRIPTION: 100006665
DAS1-B-3672-DX-TRX-G-FONT-BW-SDG&E
BJ-P-(SC3672-PSRGV-1010)

REV: A

WEIGHT: N/A

DRAWN BY: M. Harris

CREATED: 1/28/2020

MODIFIED: 2/11/2020

SHEET: 3

JMT - BOM

ITEM	ITEM QTY	PART NUMBER	DESCRIPTION
1	1	200035116	Door Component 0.3125in A36 Steel Plate, Top 36x72 Level X (Customer Designed)
2	1	200035117	Door Component 0.25in A36 Steel Perimeter Rail 36x72 Level X (Customer Designed)
3	1	200035118	Door Component 0.25in A36 Steel Perimeter Rail 36x72 Level X (Customer Designed)
4	1	200035119	Door Component 0.25in A36 Steel Stiffener, Bar 36x72 Level X (Customer Designed)
5	4	200024684	Bolt Doubler 1.75" WIDE
6	1	200035120	Door Component 0.375in A36 Steel Lap Bar 36x72 Level X (Customer Designed)
7	1	200035121	Door Component 0.25in A36 Steel Perimeter Rail 36x72 Level X (Customer Designed)
8	2	100007708	HANDLE RETAINER FONTANA SC STYLE
9	2	100007703	HANDLE ASSY 1/2IN DIA FOR FONTANA SC DOORS

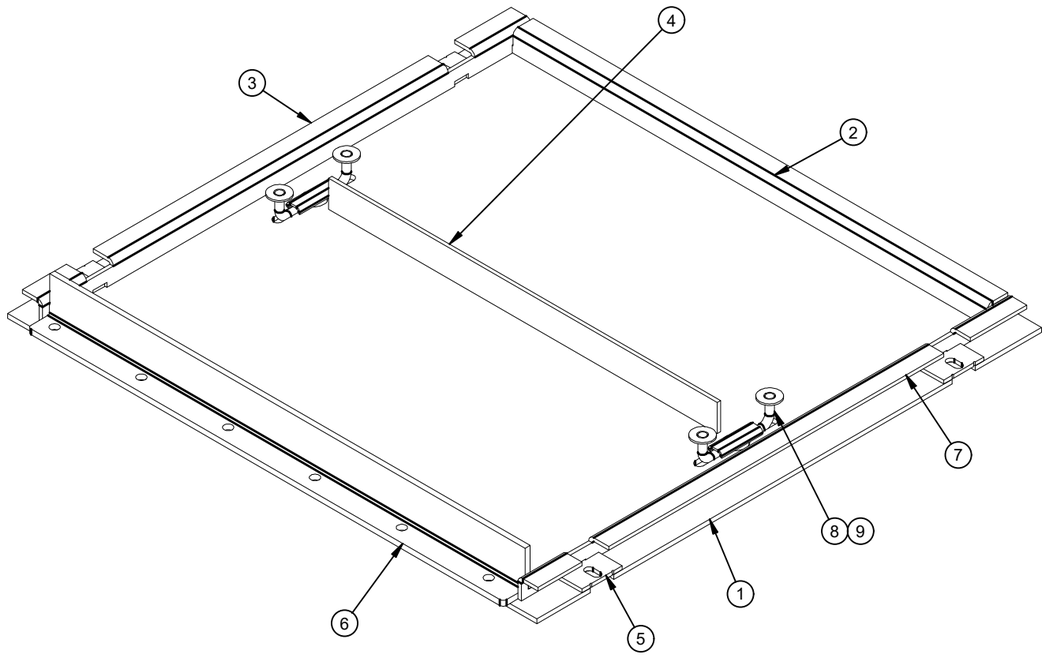

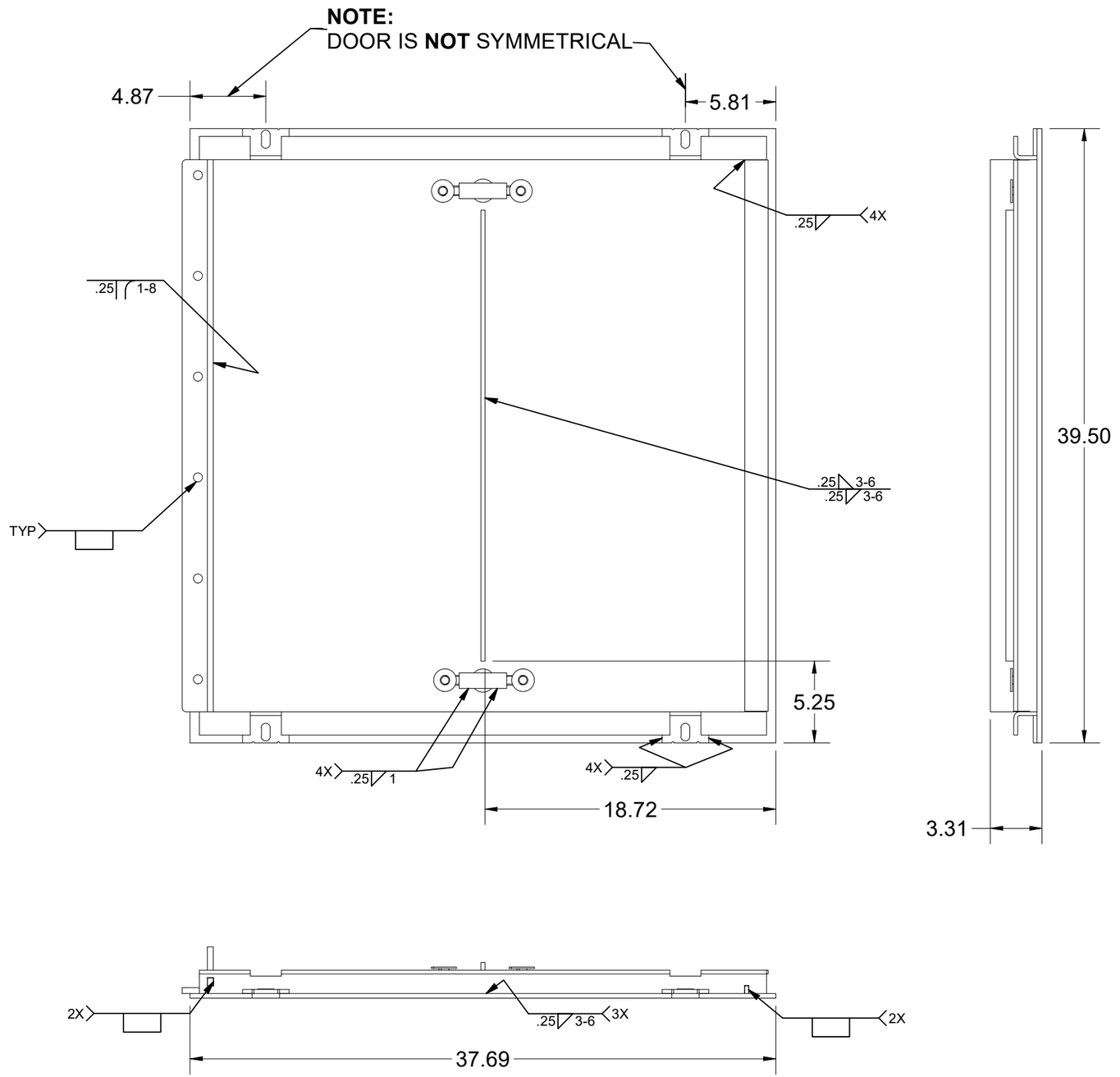

MATERIAL FINISH: Raw	JENSEN METALTECH 450 E. GLENDALE AVE. SPARKS. NV 89431 775-352-2716 FAX: 755-358-8127 *JENSENMETALTECH.COM*	©2020 Jensen Precast- All rights reserved. All materials appearing as Jensen Precast documents and the like are proprietary work product and are protected under U.S. copyright and other laws. Unless in conjunction with business conducted with Jensen Precast, any use of Jensen Precast work product without express, written consent is prohibited, and recipient is prohibited from distributing any and all work product to non-approved third parties under penalty of civil action.	PART NUMBER & DESCRIPTION: 100006666 DAS1-B-3672-DX-TRX-R-FONT — REV: A
MATERIAL SURFACE: TraxPlate™			WEIGHT: N/A — DRAWN BY: M. Harris — SHEET: 4
			CREATED: 8/19/2019 — MODIFIED: 2/11/2020

100006665.idw

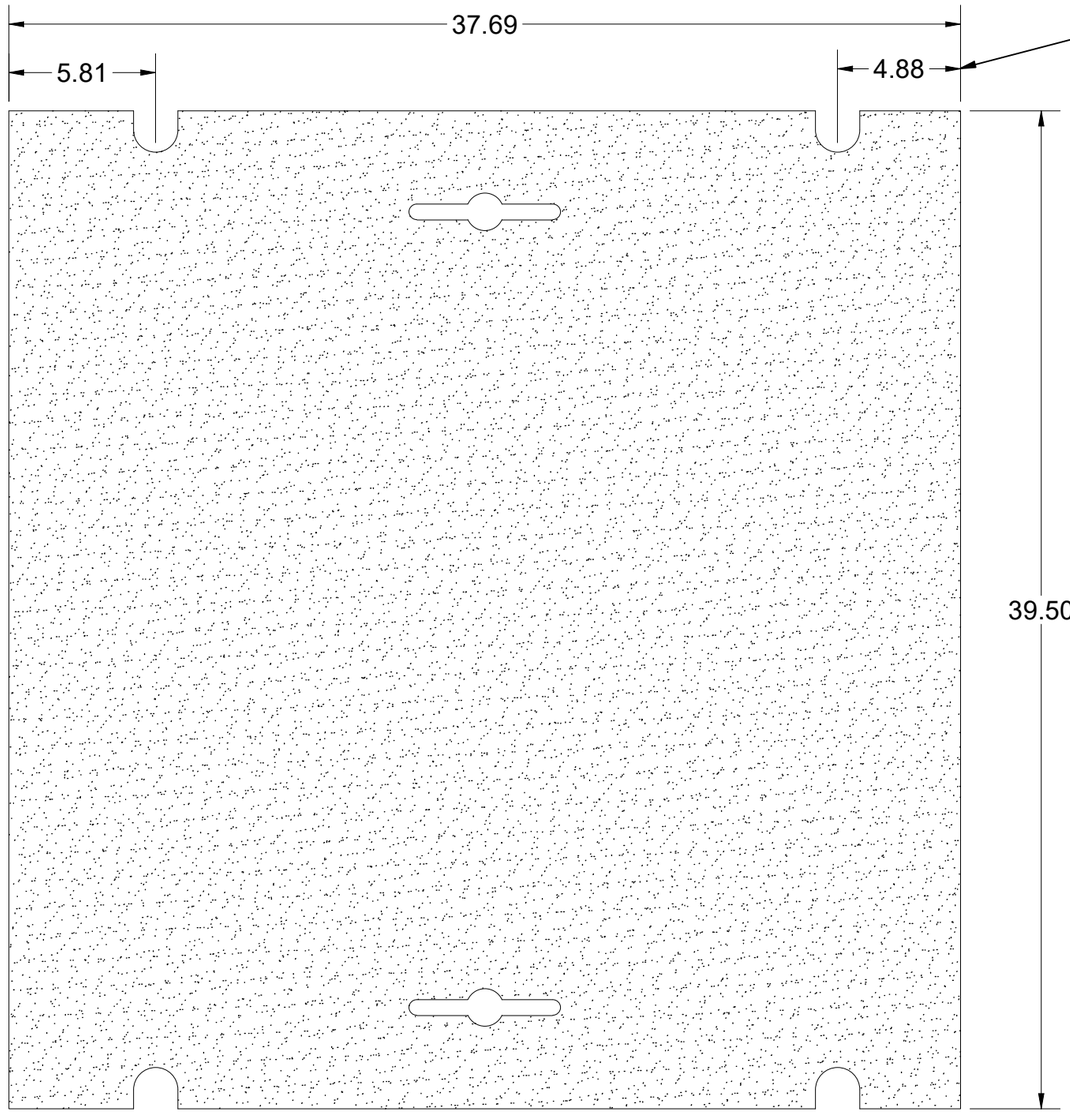

NOTE:
DOOR IS **NOT** SYMMETRIC

100006665.idw

BEND TABLE				MATERIAL IFS: 100007838
BEND RADIUS	V-OPENING	BEND ANGLE	BEND DEDUCTION	MATERIAL THK: 0.3125
-	-	-	-	MAT DESCRIPTION: STL ASTM A36 SM-HRPO RAW .3125

JENSEN METALTECH
450 E. GLENDALE AVE. SPARKS. NV 89431
775-352-2716 FAX: 755-358-8127
JENSENMETALTECH.COM

©2020 Jensen Precast- All rights reserved.
All materials appearing as Jensen Precast documents and the like are proprietary work product and are protected under U.S. copyright and other laws.
Unless in conjunction with business conducted with Jensen Precast, any use of Jensen Precast work product without express, written consent is prohibited, and recipient is prohibited from distributing any and all work product to non-approved third parties under penalty of civil action.

NAME & DESCRIPTION:	200035116 Door Component 0.3125in A36 Steel Plate, Top 36x72 Level X (Customer Designed)	REV: A
WEIGHT: 130.237 lbmass	DRAWN BY: M. Harris	SHEET: 5 OF 11
CREATED: 8/19/2019	MODIFIED: 2/11/2020	

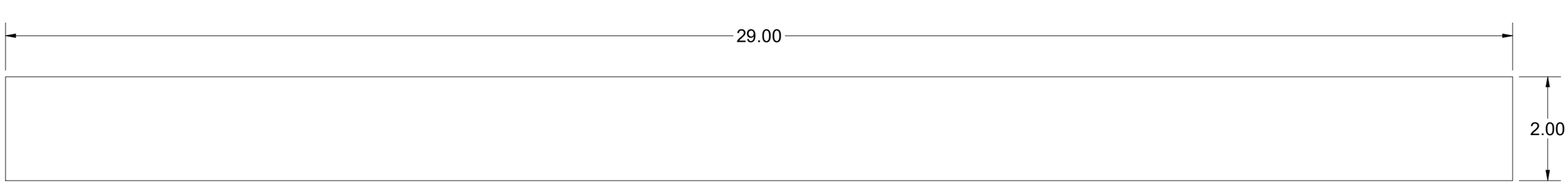

BEND TABLE			
BEND RADIUS	V-OPENING	BEND ANGLE	BEND DEDUCTION
-	-	-	-

MATERIAL IFS: 100007735

MATERIAL THK: 0.25

MAT DESCRIPTION: STL ASTM A36 SM-HRPO RAW .250

JENSEN METALTECH
450 E. GLENDALE AVE. SPARKS. NV 89431
775-352-2716 FAX: 755-358-8127
JENSENMETALTECH.COM

©2020 Jensen Precast- All rights reserved.
All materials appearing as Jensen Precast documents and the like are proprietary work product and are protected under U.S. copyright and other laws.
Unless in conjunction with business conducted with Jensen Precast, any use of Jensen Precast work product without express, written consent is prohibited, and recipient is prohibited from distributing any and all work product to non-approved third parties under penalty of civil action.

NAME & DESCRIPTION: 200035119
Door Component 0.25in A36 Steel Stiffener, Bar 36x72 Level X (Customer Designed)

REV: A

WEIGHT: 4.118 lbmass

DRAWN BY: M. Harris

CREATED: 8/19/2019

MODIFIED: 2/11/2020

SHEET: 6 OF 11

100006665.idw

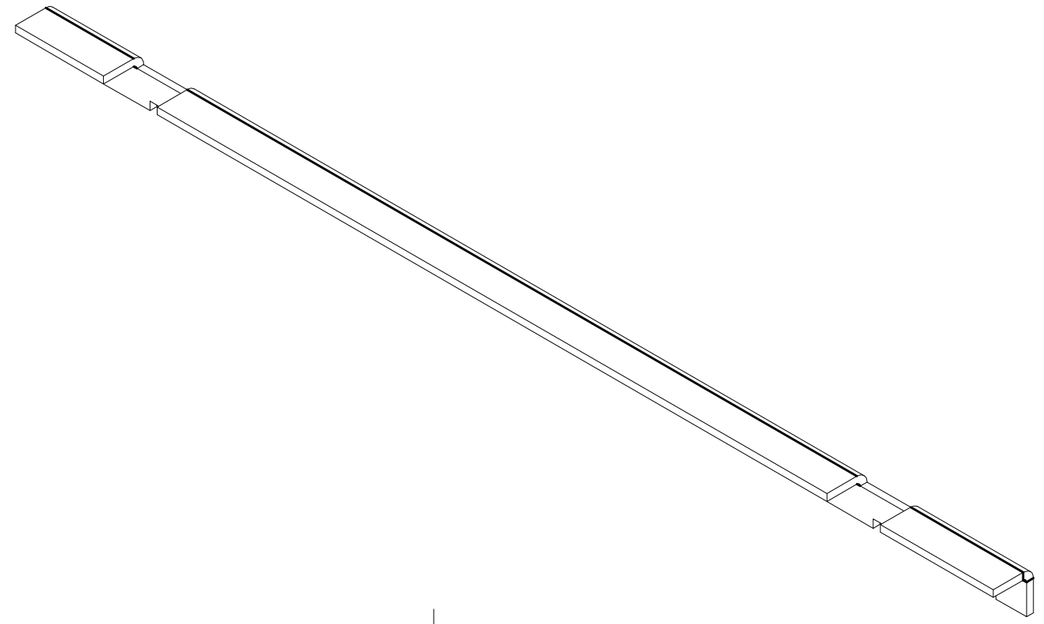

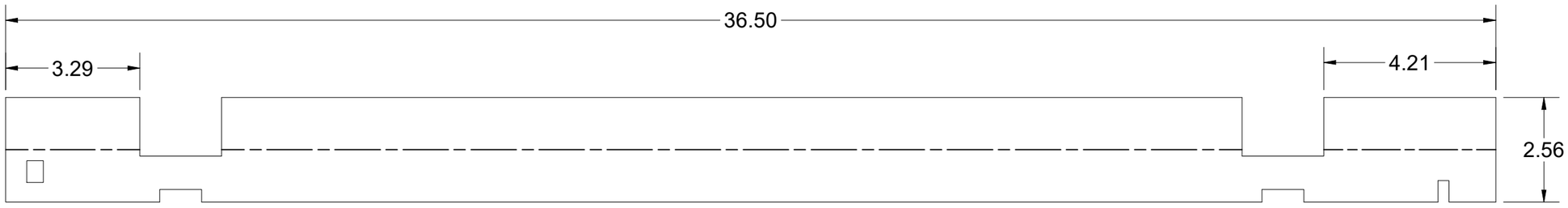



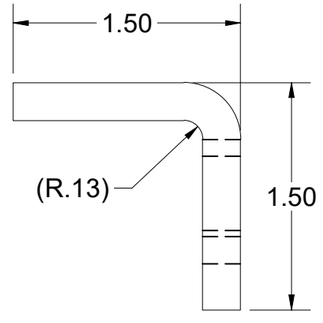

BEND TABLE			
BEND RADIUS	V-OPENING	BEND ANGLE	BEND DEDUCTION
0.125	2"	90	0.440

MATERIAL IFS: 100007735

MATERIAL THK: 0.25

MAT DESCRIPTION: STL ASTM A36 SM-HRPO RAW .250

JENSEN METALTECH
450 E. GLENDALE AVE. SPARKS. NV 89431
775-352-2716 FAX: 755-358-8127
JENSENMETALTECH.COM

©2020 Jensen Precast- All rights reserved.
All materials appearing as Jensen Precast documents and the like are proprietary work product and are protected under U.S. copyright and other laws.
Unless in conjunction with business conducted with Jensen Precast, any use of Jensen Precast work product without express, written consent is prohibited, and recipient is prohibited from distributing any and all work product to non-approved third parties under penalty of civil action.

NAME & DESCRIPTION: 200035121
Door Component 0.25in A36 Steel Perimeter Rail 36x72 Level X (Customer Designed)

REV: A

WEIGHT: 6.347 lbmass

DRAWN BY: M. Harris

CREATED: 8/19/2019

MODIFIED: 2/11/2020

SHEET: 7 OF 11

100006665.idw

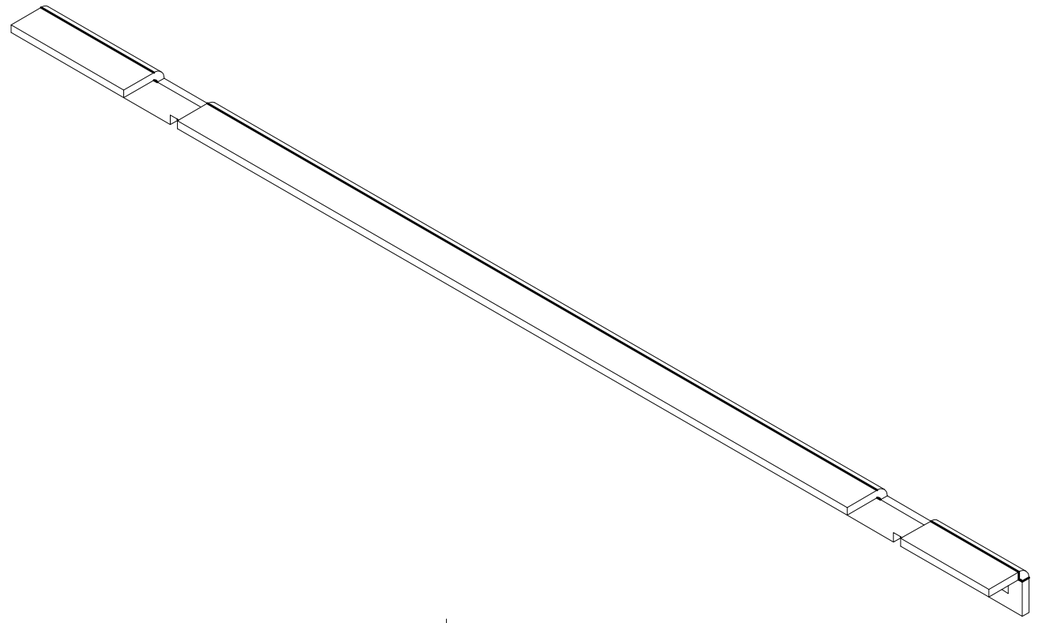

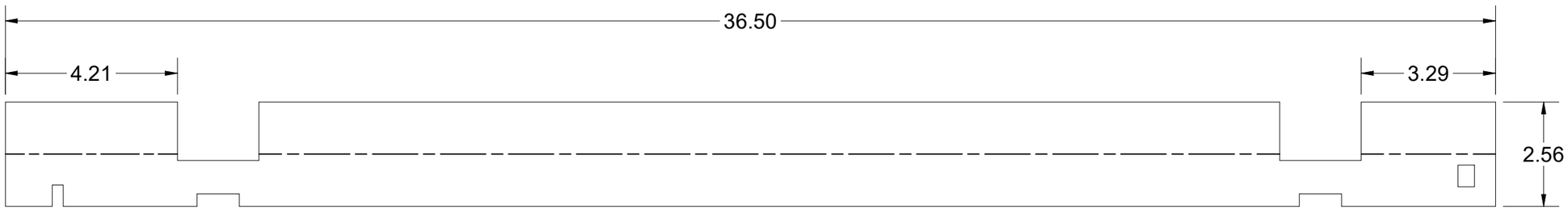

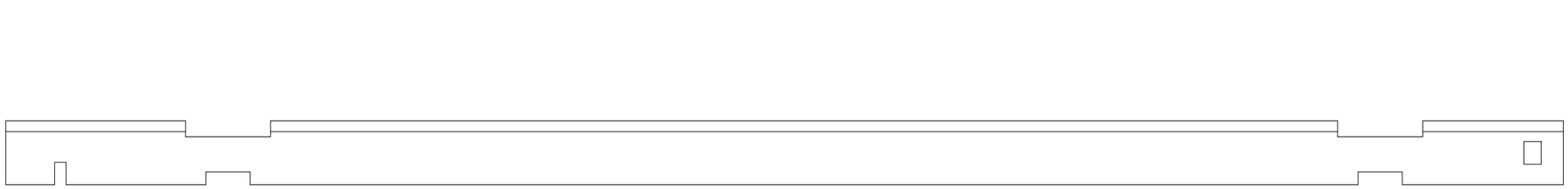

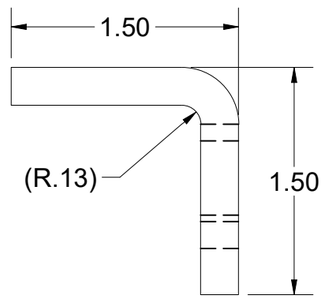

BEND TABLE				MATERIAL IFS: 100007735
BEND RADIUS	V-OPENING	BEND ANGLE	BEND DEDUCTION	MATERIAL THK: 0.25
0.125	2"	90	0.440	MAT DESCRIPTION: STL ASTM A36 SM-HRPO RAW .250

JENSEN METALTECH
450 E. GLENDALE AVE. SPARKS. NV 89431
775-352-2716 FAX: 755-358-8127
JENSENMETALTECH.COM

©2020 Jensen Precast- All rights reserved.
All materials appearing as Jensen Precast documents and the like are proprietary work product and are protected under U.S. copyright and other laws.
Unless in conjunction with business conducted with Jensen Precast, any use of Jensen Precast work product without express, written consent is prohibited, and recipient is prohibited from distributing any and all work product to non-approved third parties under penalty of civil action.

NAME & DESCRIPTION:	200035118 Door Component 0.25in A36 Steel Perimeter Rail 36x72 Level X (Customer Designed)		REV: A
WEIGHT: 6.347 lbmass		DRAWN BY: M. Harris	SHEET: 8 OF 11
CREATED: 8/19/2019		MODIFIED: 2/11/2020	

100006665.idw

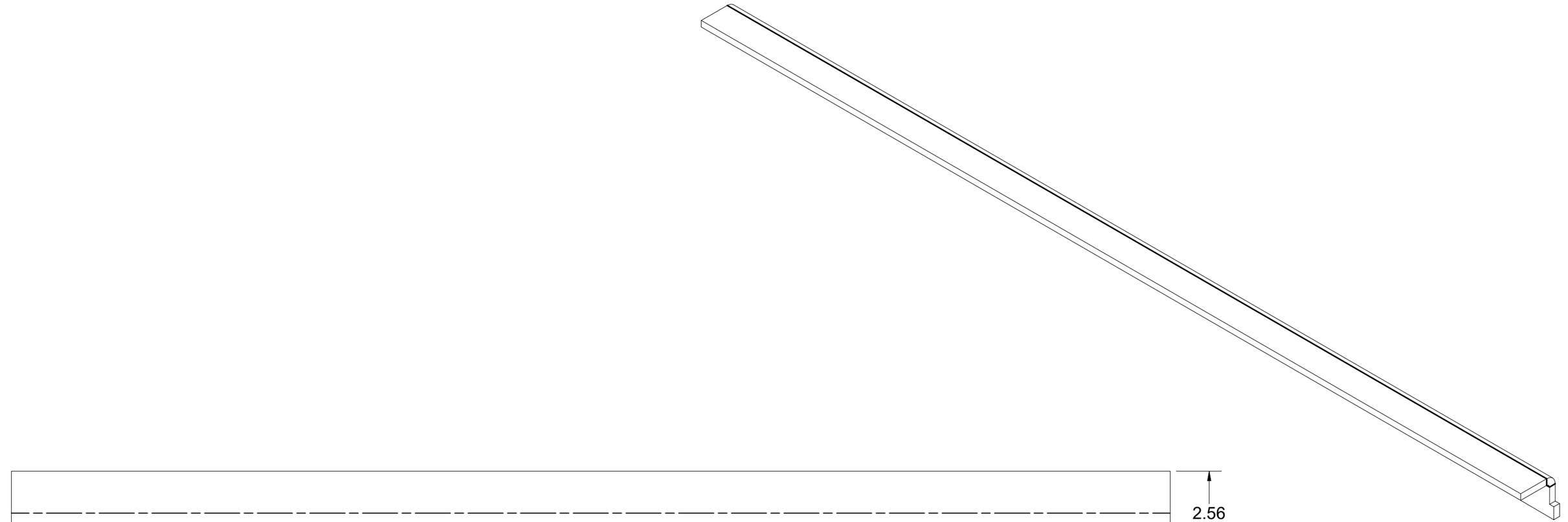

100006665.idw

BEND TABLE				MATERIAL IFS: 100007735
BEND RADIUS	V-OPENING	BEND ANGLE	BEND DEDUCTION	MATERIAL THK: 0.25
0.125	2"	90	0.440	MAT DESCRIPTION: STL ASTM A36 SM-HRPO RAW .250

JENSEN METALTECH
450 E. GLENDALE AVE. SPARKS. NV 89431
775-352-2716 FAX: 755-358-8127
JENSENMETALTECH.COM

©2020 Jensen Precast- All rights reserved.
All materials appearing as Jensen Precast documents and the like are proprietary work product and are protected under U.S. copyright and other laws.
Unless in conjunction with business conducted with Jensen Precast, any use of Jensen Precast work product without express, written consent is prohibited, and recipient is prohibited from distributing any and all work product to non-approved third parties under penalty of civil action.

NAME & DESCRIPTION: 200035117 Door Component 0.25in A36 Steel Perimeter Rail 36x72 Level X (Customer Designed)		REV: A
WEIGHT: 6.662 lbmass	DRAWN BY: M. Harris	SHEET: 9 OF 11
CREATED: 8/19/2019	MODIFIED: 2/11/2020	

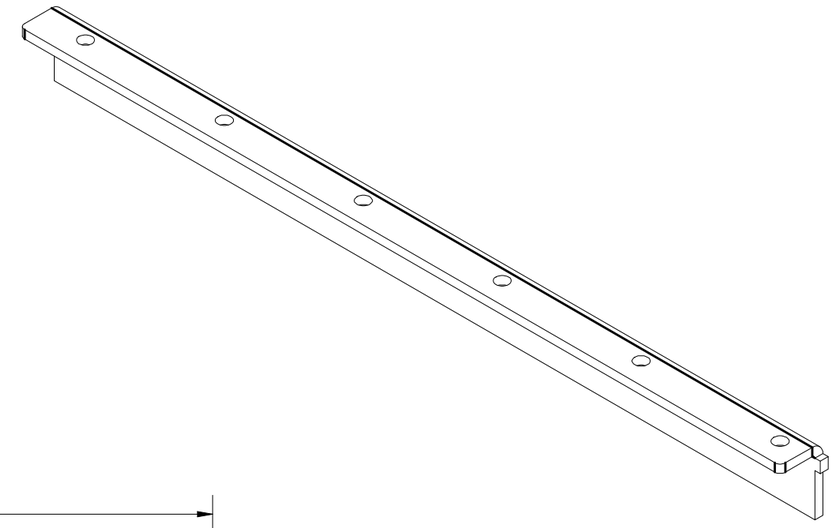

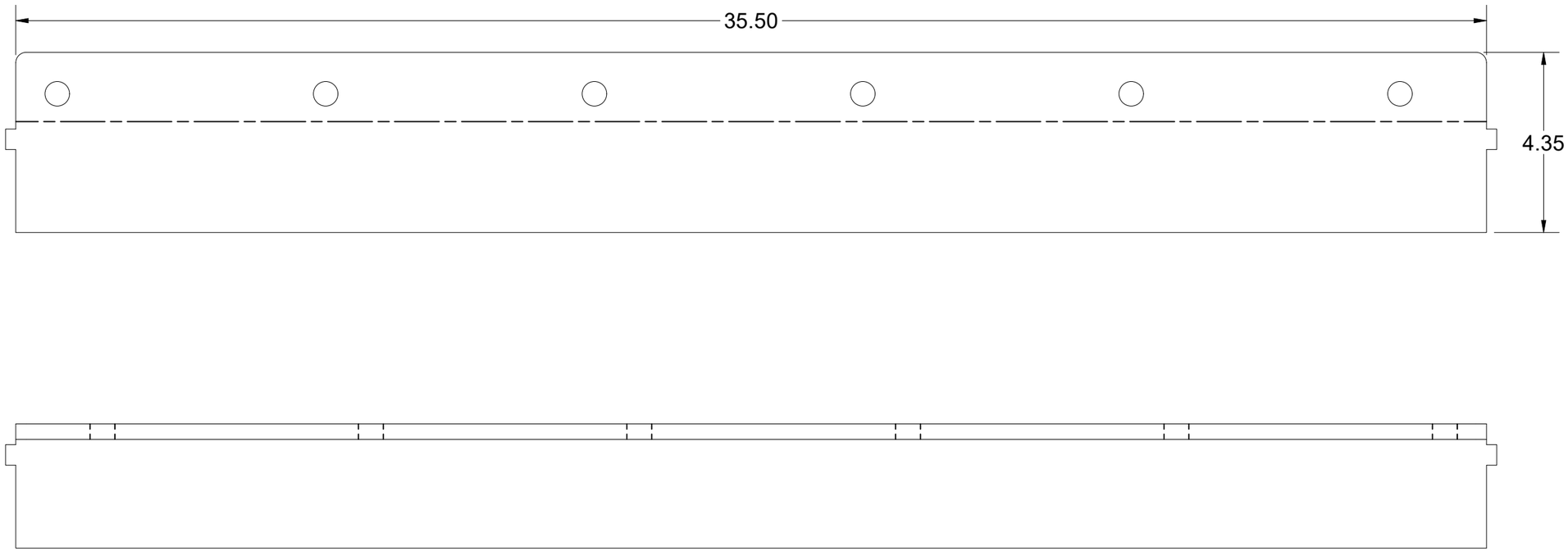

BEND TABLE			
BEND RADIUS	V-OPENING	BEND ANGLE	BEND DEDUCTION
0.125	2.5"	90	0.650

MATERIAL IFS: 100007805

MATERIAL THK: 0.375

MAT DESCRIPTION: STL ASTM A36 SM-HRS RAW .375

JENSEN METALTECH
450 E. GLENDALE AVE. SPARKS. NV 89431
775-352-2716 FAX: 755-358-8127
JENSENMETALTECH.COM

©2020 Jensen Precast- All rights reserved.
All materials appearing as Jensen Precast documents and the like are proprietary work product and are protected under U.S. copyright and other laws.
Unless in conjunction with business conducted with Jensen Precast, any use of Jensen Precast work product without express, written consent is prohibited, and recipient is prohibited from distributing any and all work product to non-approved third parties under penalty of civil action.

NAME & DESCRIPTION: 200035120
Door Component 0.375in A36 Steel Lap Bar 36x72 Level X (Customer Designed)

REV: A

WEIGHT: 16.798 lbmass

DRAWN BY: M. Harris

CREATED: 4/12/2019

MODIFIED: 2/11/2020

SHEET: 10 OF 11

100006665.idw

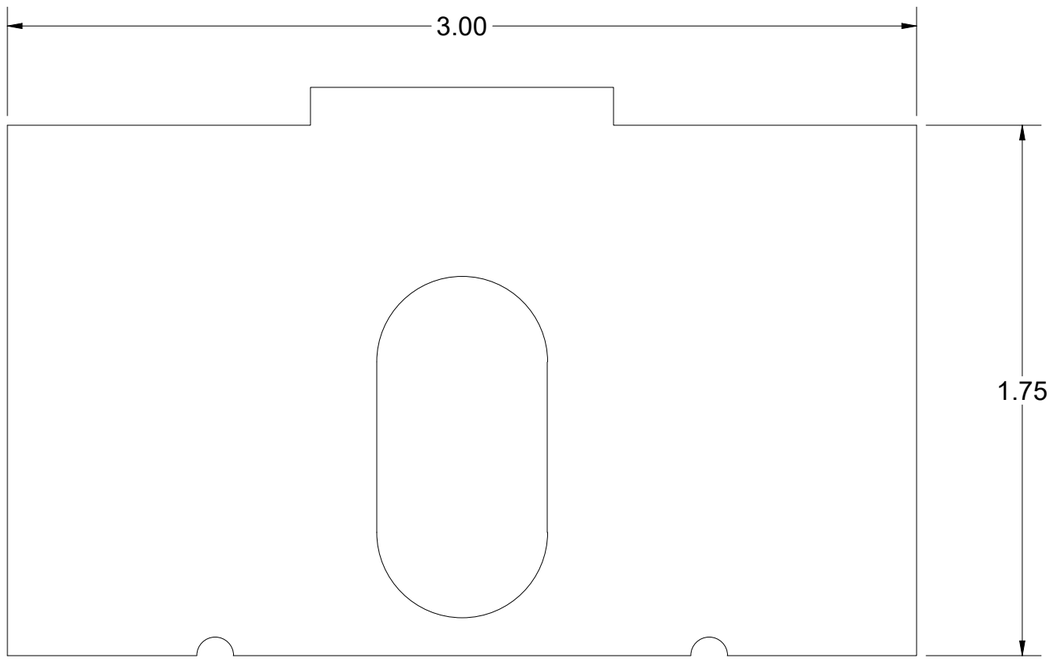

BEND TABLE			
BEND RADIUS	V-OPENING	BEND ANGLE	BEND DEDUCTION
-	-	-	-

MATERIAL IFS: 100007735

MATERIAL THK: 0.25

MAT DESCRIPTION: STL ASTM A36 SM-HRPO RAW .250

JENSEN METALTECH
450 E. GLENDALE AVE. SPARKS. NV 89431
775-352-2716 FAX: 755-358-8127
JENSENMETALTECH.COM

©2020 Jensen Precast- All rights reserved.
All materials appearing as Jensen Precast documents and the like are proprietary work product and are protected under U.S. copyright and other laws.
Unless in conjunction with business conducted with Jensen Precast, any use of Jensen Precast work product without express, written consent is prohibited, and recipient is prohibited from distributing any and all work product to non-approved third parties under penalty of civil action.

NAME & DESCRIPTION: 200024684
Bolt Doubler 1.75" WIDE

REV: A

WEIGHT: 0.341 lbmass

DRAWN BY: M. Harris

CREATED: 12/12/2018

MODIFIED: 2/11/2020

SHEET: 11 OF 11

100006665.idw