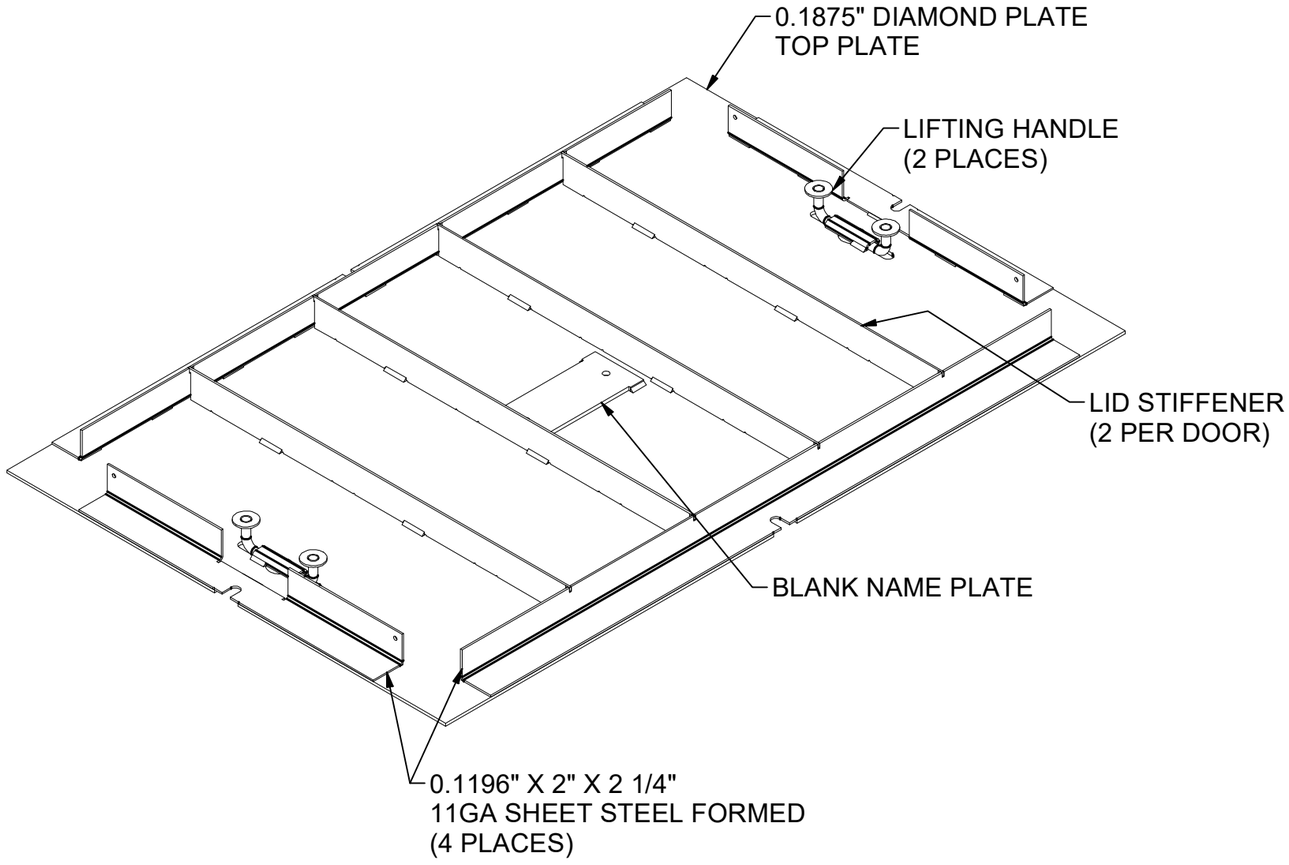

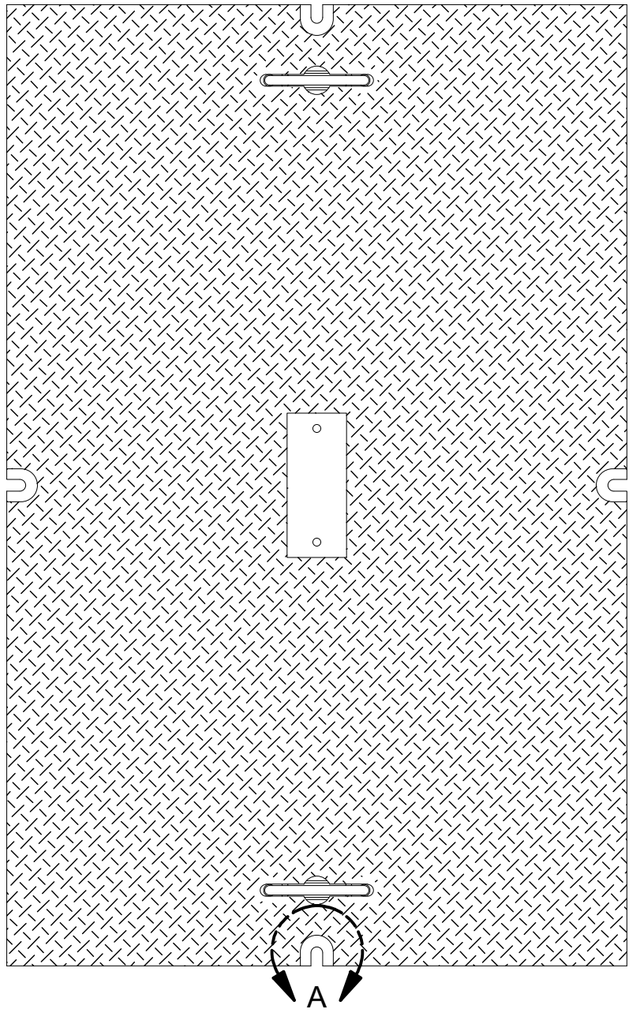

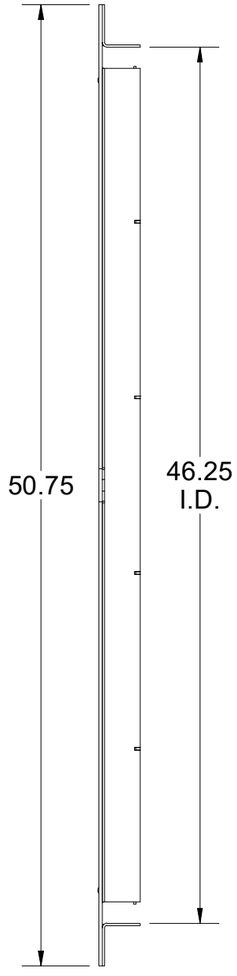

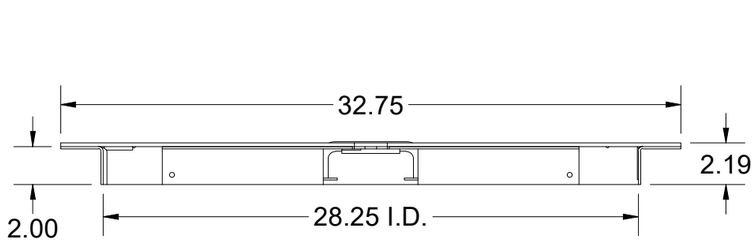

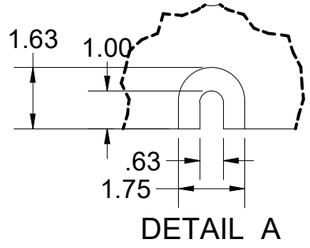

100006640.idw

LOADING CRITERIA: ASTM C1802 Load Level 02

300 psf, or 600 lb load on 5.5" x 5.5" footprint restricted to areas of pedestrian use and light maintenance vehicles use, and other areas that are inaccessible to all other vehicle traffic.

SURFACE:	Diamond Plate	FINISH:	Galvanized
WEIGHT:	126.54 lbs	MARKING:	None

Infrastructure
JENSEN
527 Dunn Circle, Sparks, NV 89431
775-352-2716 FAX: 755-358-8127
JENSENMETALTECH.COM

©2026 Jensen Infrastructure - All rights reserved.
All materials appearing as Jensen Infrastructure documents and the like are proprietary work product and are protected under U.S. copyright and other laws. Unless in conjunction with business conducted with Jensen Infrastructure , any use of Jensen Infrastructure work product without express, written consent is prohibited, and recipient is prohibited from distributing any and all work product to non-approved third parties under penalty of civil action.
This product shall only be produced in a Jensen Infrastructure facility.

DESCRIPTION:	DAS1-SD-3048-D2-DP-G-BD-FONT-PAGV (SC3048 PAGV) 30x48 Standard Door Assembly (Loading Criteria Per ASTM C1802 Load Level 02, Single Door, Steel, Drop In, Handle (2 Per Door), Diamond Plate, Galvanized, N/A, N/A PAGV (SC3048 PAGV))	REV:	A-1-2
PART NUMBER:	100006640	DRAWN BY:	R. Dohr
CREATED:	2/12/2020	MODIFIED:	3/5/2026
		SHEET:	

BILL OF MATERIALS

ITEM	ITEM QTY	QTY	PART NUMBER	DESCRIPTION	PART NAME
1	1	1	100006645	DAS1-SD-3048-D2-DP-R-BD-FONT-PAGV (SC3048 PAGV)	100006645

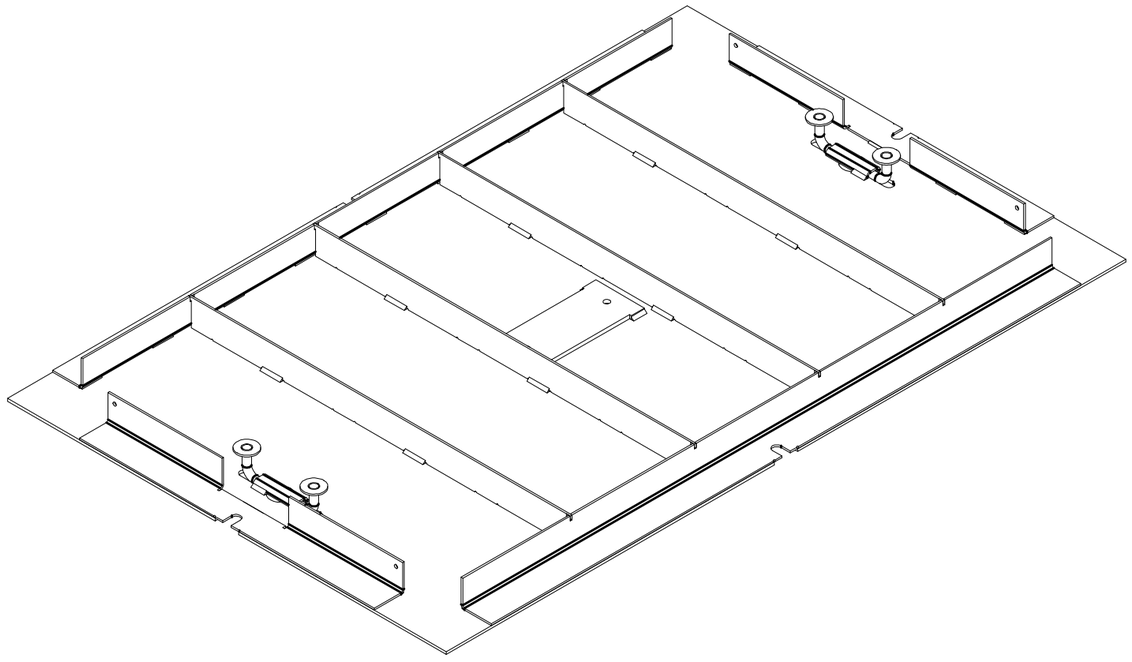

100006640.idw

REVISION HISTORY		
DESCRIPTION	DATE	REVISED BY
55158-3: MADE SIDE AND END BAR 1/4 INCH LONGER. MADE THE STIFFENER HAVE A 1/16 INCH GAP BETWEEN THE SIDE BARS.	6/03/2025	COLLIN HEYWOOD
ADDED GALV HANGING HOLES	2/25/2025	M. BOUCHARD
RECALC'D REDUCED STIFFENER THICKNESS AND INCREASED STIFFENER QUANTITY	3/5/2026	R. DOHR

MATERIAL FINISH: Galvanized

MATERIAL SURFACE: Diamond Plate

Infrastructure JENSEN

527 Dunn Circle, Sparks, NV 89431
775-352-2716 FAX: 755-358-8127
JENSENMETALTECH.COM

©2026 Jensen Infrastructure - All rights reserved.
All materials appearing as Jensen Infrastructure documents and the like are proprietary work product and are protected under U.S. copyright and other laws. Unless in conjunction with business conducted with Jensen Infrastructure , any use of Jensen Infrastructure work product without express, written consent is prohibited, and recipient is prohibited from distributing any and all work product to non-approved third parties under penalty of civil action.
This product shall only be produced in a Jensen Infrastructure facility.

PART NUMBER & DESCRIPTION: 100006640 DAS1-SD-3048-D2-DP-G-BD-FONT-PAGV (SC3048 PAGV)

REV: A-1-2

WEIGHT: 126.54 Lbs

DRAWN BY: R. Dohr

CREATED: 2/12/2020

MODIFIED: 3/5/2026

SHEET: 1

BILL OF MATERIALS

ITEM	ITEM QTY	QTY	PART NUMBER	DESCRIPTION	PART NAME
1	4	7.636 lbmass	100007807	Door Component Steel Stiffener, Bar	200035919
2	1	97.931 lbmass	100007814	Door Component Steel Plate, Top Nameplate	200035922
3	2	12.039 lbmass	100007807	Door Component Steel Perimeter Rail, Long	200035921
4	2	5.308 lbmass	100007807	Door Component Steel Perimeter Rail	200035920
5	2	2	100007708	HANDLE RETAINER FONTANA SC STYLE	100007708
6	2	2	100007703	HANDLE ASSY 1/2IN DIA FOR FONTANA SC DOORS	100007703
7	1	1	100007685	NAME PLATE BACKING PLATE	100007685

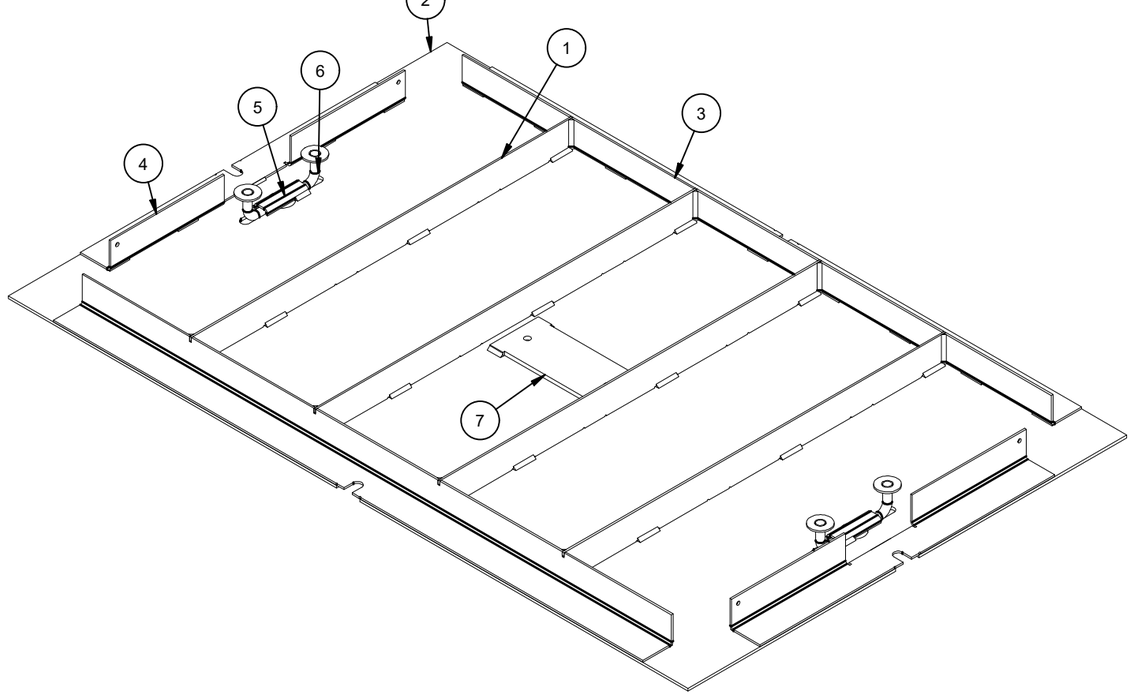

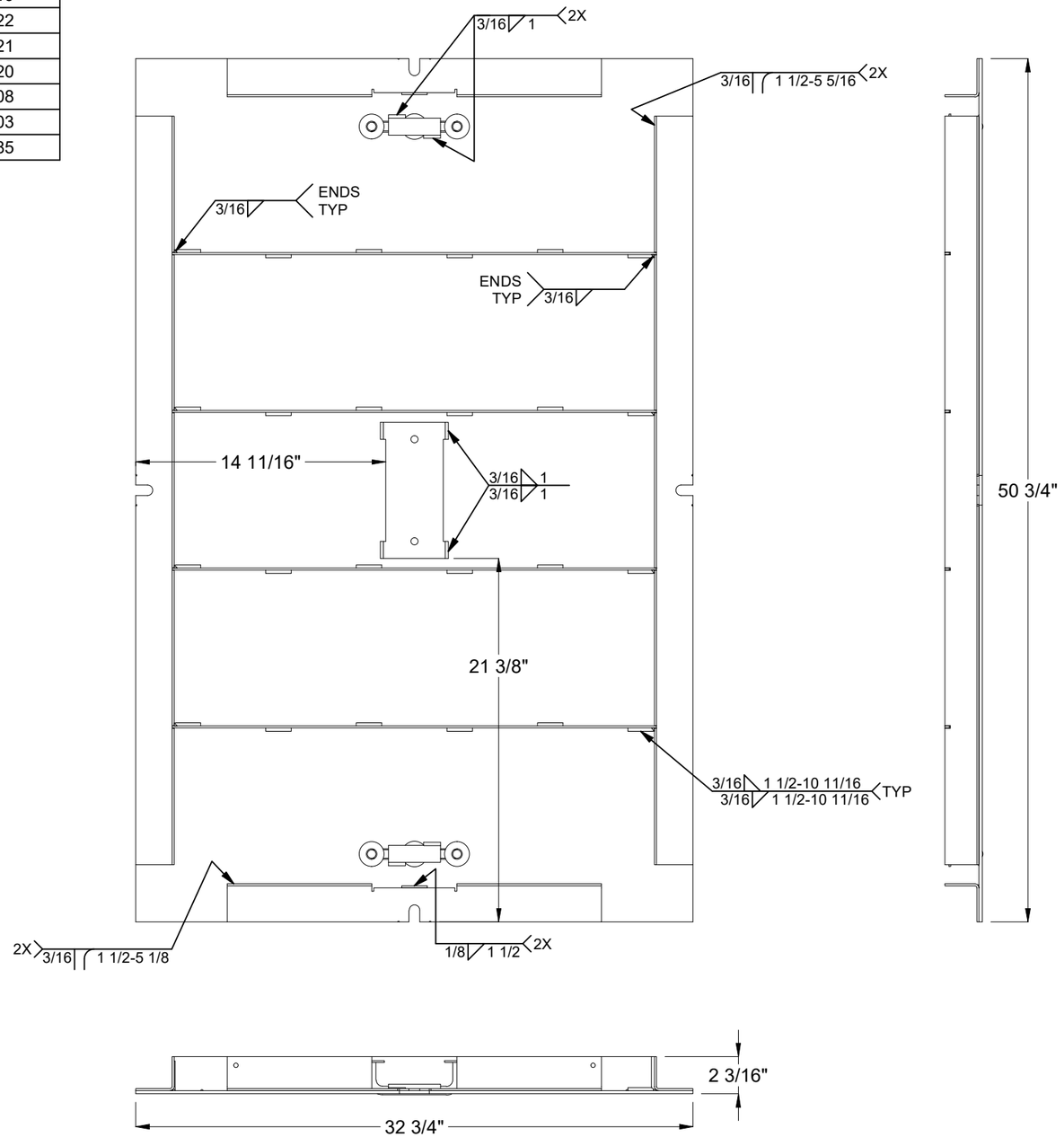

100006640.idw

MATERIAL FINISH: Raw		PART NUMBER & DESCRIPTION: 100006645 DAS1-SD-3048-D2-DP-R-BD-FONT-PAGV (SC3048 PAGV)	REV: A-1-2
MATERIAL SURFACE: Diamond Plate		WEIGHT: 126.54 Lbs	DRAWN BY: R. Dohr
		CREATED: 2/12/2020	MODIFIED: 3/5/2026
			SHEET: 2

Infrastructure JENSEN

527 Dunn Circle, Sparks, NV 89431
775-352-2716 FAX: 755-358-8127
JENSENMETALTECH.COM

©2026 Jensen Infrastructure - All rights reserved. All materials appearing as Jensen Infrastructure documents and the like are proprietary work product and are protected under U.S. copyright and other laws. Unless in conjunction with business conducted with Jensen Infrastructure , any use of Jensen Infrastructure work product without express, written consent is prohibited, and recipient is prohibited from distributing any and all work product to non-approved third parties under penalty of civil action. This product shall only be produced in a Jensen Infrastructure facility.

BURN LIST - BOM

PART NAME	ITEM QTY	PART NUMBER	DESCRIPTION	STOCK NUMBER	MATERIAL	MASS	SHEET
200035919	4	100007807	Door Component Steel Stiffener, Bar	100007807	STL ASTM A36 GA-11 SM-HRS RAW .1196	1.909 lbmass	05
200035920	2	100007807	Door Component Steel Perimeter Rail	100007807	STL ASTM A36 GA-11 SM-HRS RAW .1196	2.651 lbmass	06
200035921	2	100007807	Door Component Steel Perimeter Rail, Long	100007807	STL ASTM A36 GA-11 SM-HRS RAW .1196	6.019 lbmass	07
200035922	1	100007814	Door Component Steel Plate, Top Nameplate	100007814	SHT STL CQ DP RAW .1875 - 36 KSI YIELD	97.931 lbmass	08

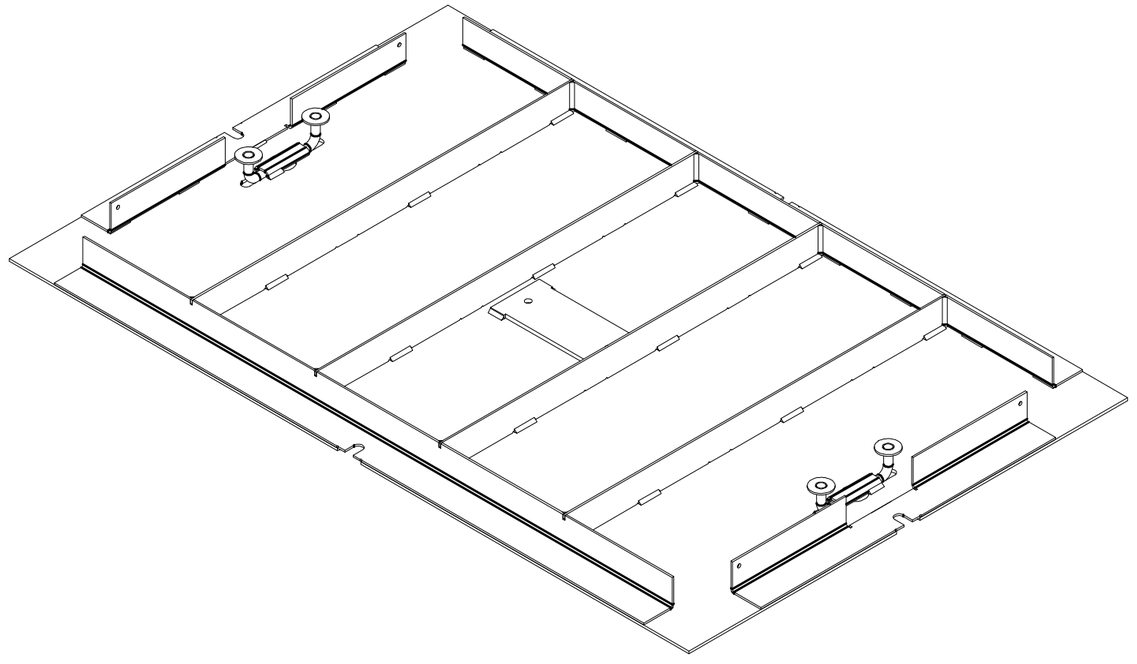

100006640.idw

MATERIAL FINISH: Galvanized

MATERIAL SURFACE: Diamond Plate

Infrastructure JENSEN
527 Dunn Circle, Sparks, NV 89431
775-352-2716 FAX: 755-358-8127
JENSENMETALTECH.COM

©2026 Jensen Infrastructure - All rights reserved.
All materials appearing as Jensen Infrastructure documents and the like are proprietary work product and are protected under U.S. copyright and other laws. Unless in conjunction with business conducted with Jensen Infrastructure , any use of Jensen Infrastructure work product without express, written consent is prohibited, and recipient is prohibited from distributing any and all work product to non-approved third parties under penalty of civil action.
This product shall only be produced in a Jensen Infrastructure facility.

PART NUMBER & DESCRIPTION: 100006640 DAS1-SD-3048-D2-DP-G-BD-FONT-PAGV (SC3048 PAGV)

REV: A-1-2

WEIGHT: 126.54 Lbs

DRAWN BY: R. Dohr

CREATED: 2/12/2020

MODIFIED: 3/5/2026

SHEET: 3

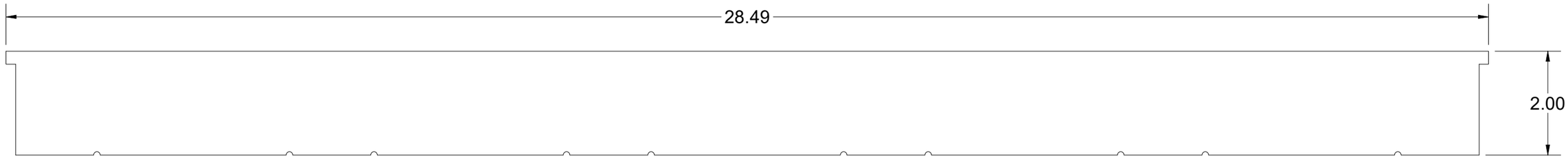

BEND TABLE			
BEND RADIUS	V-OPENING	BEND ANGLE	BEND DEDUCTION
-	-	- 0	-

MATERIAL IFS: 100007807

MATERIAL THK: 0.1196

MAT DESCRIPTION: STL ASTM A36 GA-11 SM-HRS RAW .1196

Infrastructure
JENSEN
527 Dunn Circle, Sparks, NV 89431
775-352-2716 FAX: 755-358-8127
JENSENMETALTECH.COM

©2026 Jensen Infrastructure - All rights reserved.
All materials appearing as Jensen Infrastructure documents and the like are proprietary work product and are protected under U.S. copyright and other laws. Unless in conjunction with business conducted with Jensen Infrastructure , any use of Jensen Infrastructure work product without express, written consent is prohibited, and recipient is prohibited from distributing any and all work product to non-approved third parties under penalty of civil action.
This product shall only be produced in a Jensen Infrastructure facility.

NAME & DESCRIPTION: 200035919
Door Component Steel Stiffener, Bar

REV: A-1-2

WEIGHT: 1.909 lbmass

DRAWN BY: R. Dohr

CREATED: 2/12/2020

MODIFIED: 3/5/2026

SHEET: 4 OF 7

100006640.idw

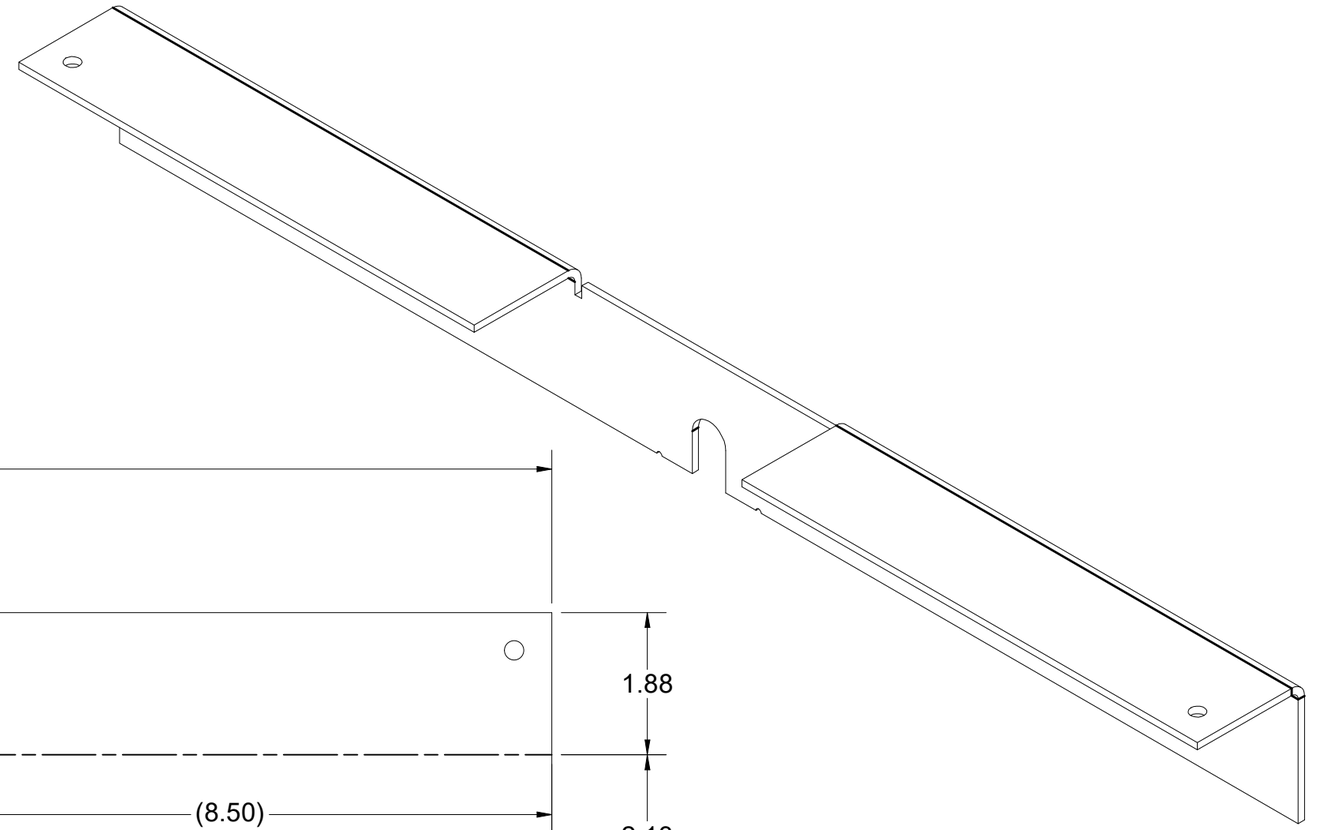

SYMMETRIC

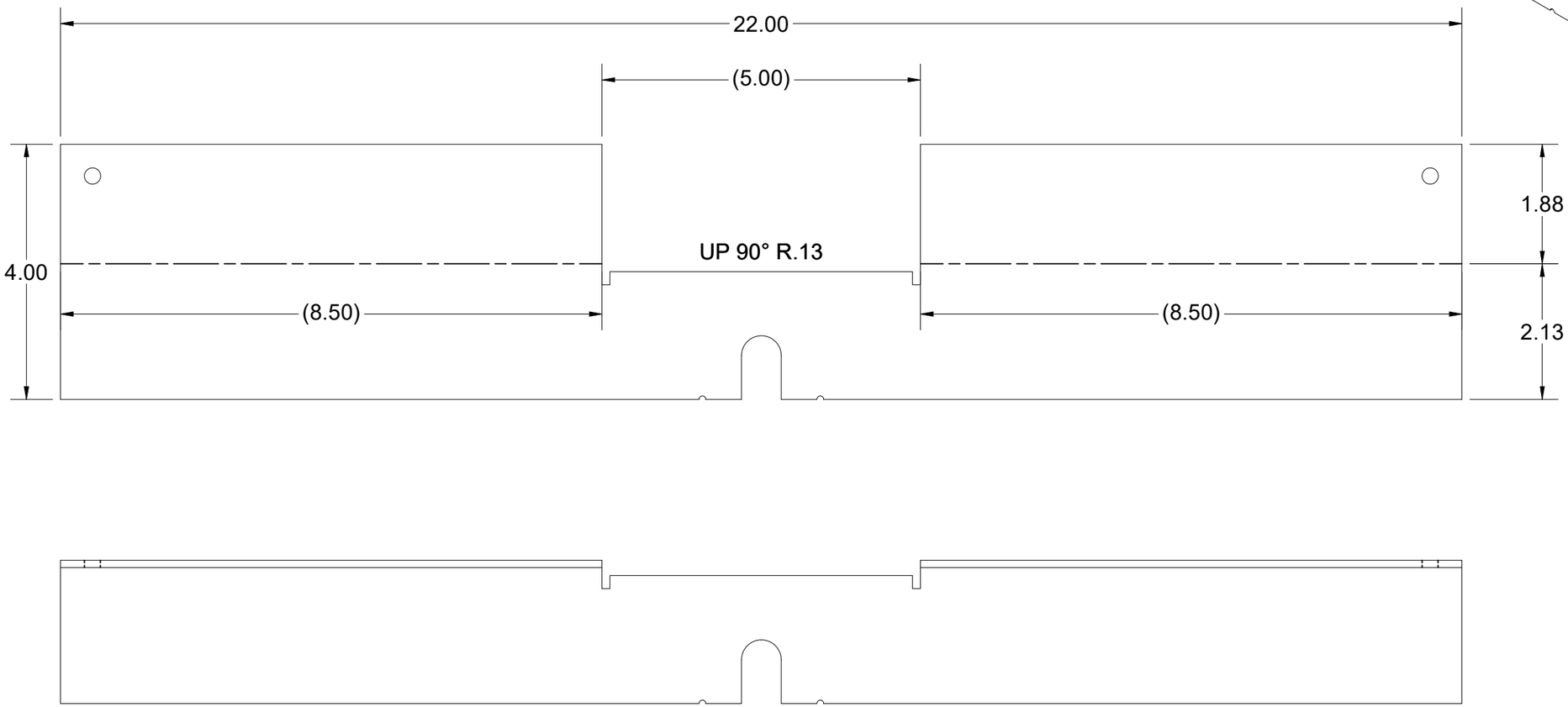

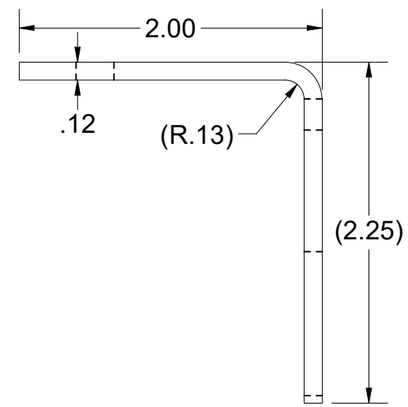

BEND TABLE				MATERIAL IFS: 100007807
BEND RADIUS	V-OPENING	BEND ANGLE	BEND DEDUCTION	MATERIAL THK: 0.1196
0.125	1	90	0.247	MAT DESCRIPTION: STL ASTM A36 GA-11 SM-HRS RAW .1196

Infrastructure JENSEN

527 Dunn Circle, Sparks, NV 89431
775-352-2716 FAX: 755-358-8127
JENSENMETALTECH.COM

©2026 Jensen Infrastructure - All rights reserved. All materials appearing as Jensen Infrastructure documents and the like are proprietary work product and are protected under U.S. copyright and other laws. Unless in conjunction with business conducted with Jensen Infrastructure , any use of Jensen Infrastructure work product without express, written consent is prohibited, and recipient is prohibited from distributing any and all work product to non-approved third parties under penalty of civil action. This product shall only be produced in a Jensen Infrastructure facility.

NAME & DESCRIPTION: 200035920 Door Component Steel Perimeter Rail		REV: A-1-2
WEIGHT: 2.651 lbmass	DRAWN BY: R. Dohr	SHEET: 5 OF 7
CREATED: 2/12/2020	MODIFIED: 3/5/2026	

100006640.idw

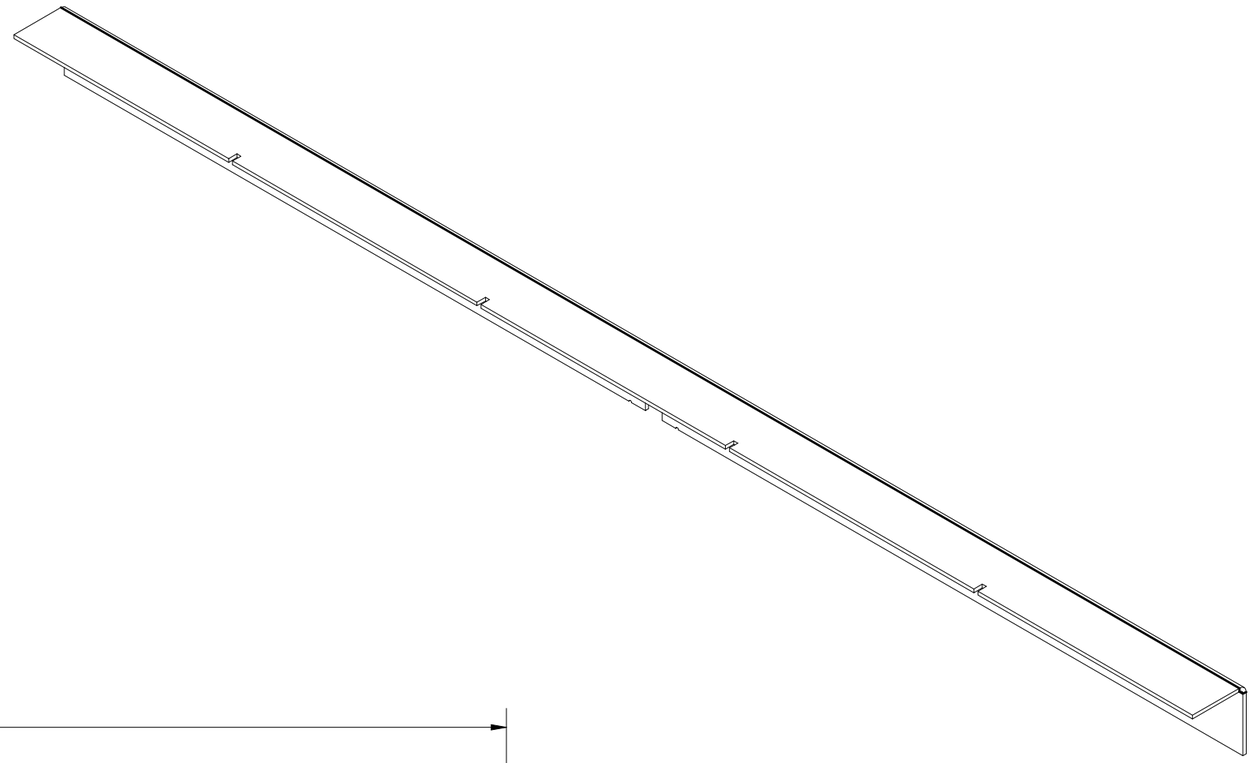

100006640.idw

SYMMETRIC

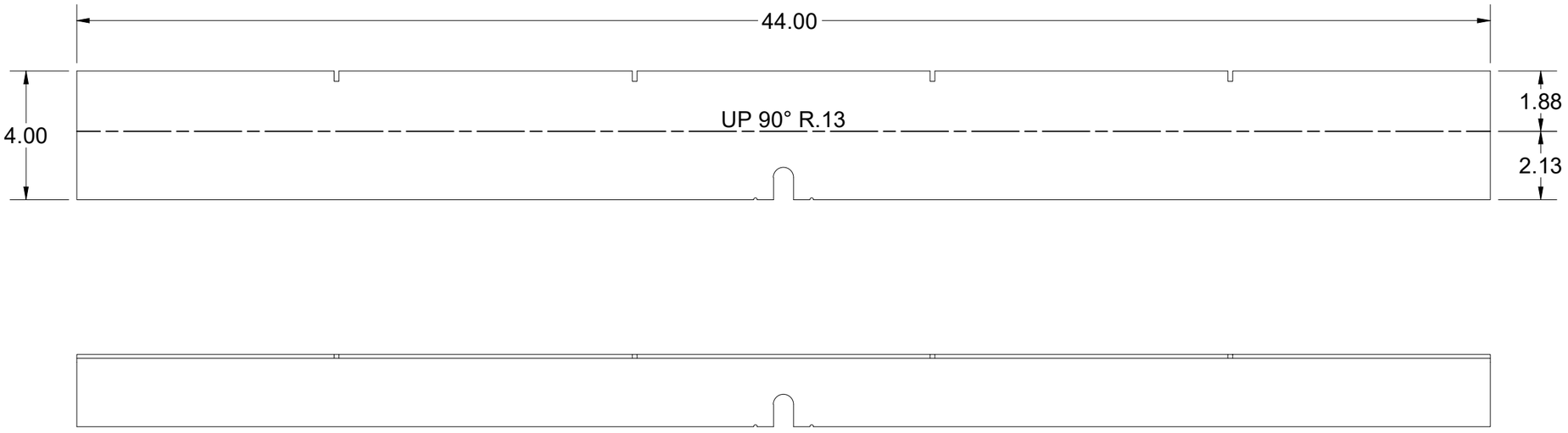

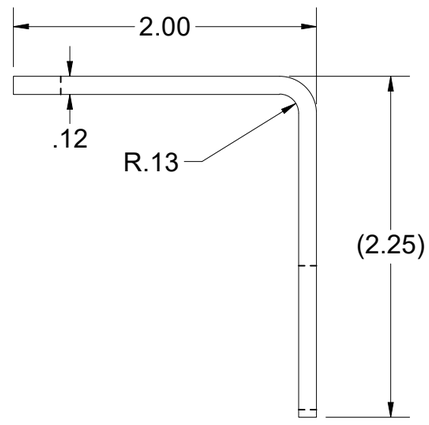

BEND TABLE			
BEND RADIUS	V-OPENING	BEND ANGLE	BEND DEDUCTION
0.125	1	90	0.247

MATERIAL IFS: 100007807

MATERIAL THK: 0.1196

MAT DESCRIPTION: STL ASTM A36 GA-11 SM-HRS RAW .1196

Infrastructure JENSEN

527 Dunn Circle, Sparks, NV 89431
775-352-2716 FAX: 755-358-8127
JENSENMETALTECH.COM

©2026 Jensen Infrastructure - All rights reserved. All materials appearing as Jensen Infrastructure documents and the like are proprietary work product and are protected under U.S. copyright and other laws. Unless in conjunction with business conducted with Jensen Infrastructure , any use of Jensen Infrastructure work product without express, written consent is prohibited, and recipient is prohibited from distributing any and all work product to non-approved third parties under penalty of civil action. This product shall only be produced in a Jensen Infrastructure facility.

NAME & DESCRIPTION: 200035921 Door Component Steel Perimeter Rail, Long

REV: A-1-2

WEIGHT: 6.019 lbmass

DRAWN BY: R. Dohr

SHEET: 6 OF 7

CREATED: 2/12/2020

MODIFIED: 3/5/2026

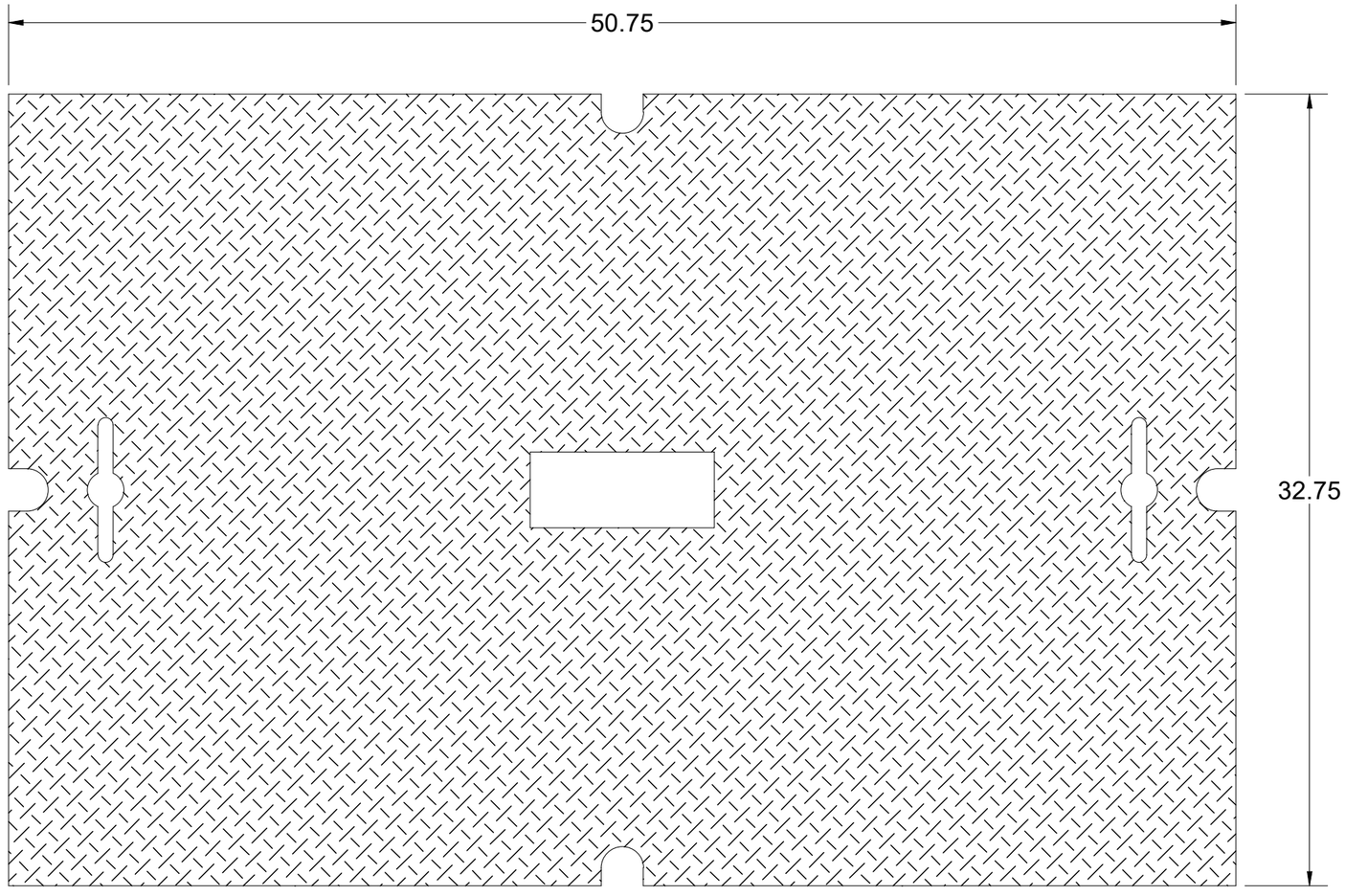

100006640.idw

BEND TABLE			
BEND RADIUS	V-OPENING	BEND ANGLE	BEND DEDUCTION
-	-	- 0	-

MATERIAL IFS: 100007814

MATERIAL THK: 0.1875

MAT DESCRIPTION: SHT STL CQ DP RAW .1875 - 36 KSI YIELD

Infrastructure JENSEN
527 Dunn Circle, Sparks, NV 89431
775-352-2716 FAX: 755-358-8127
JENSENMETALTECH.COM

©2026 Jensen Infrastructure - All rights reserved.
All materials appearing as Jensen Infrastructure documents and the like are proprietary work product and are protected under U.S. copyright and other laws. Unless in conjunction with business conducted with Jensen Infrastructure , any use of Jensen Infrastructure work product without express, written consent is prohibited, and recipient is prohibited from distributing any and all work product to non-approved third parties under penalty of civil action.
This product shall only be produced in a Jensen Infrastructure facility.

NAME & DESCRIPTION: 200035922
Door Component Steel Plate, Top Nameplate

REV: A-1-2

WEIGHT: 97.931 lbmass

DRAWN BY: R. Dohr

CREATED: 2/12/2020

MODIFIED: 3/5/2026

SHEET: 7 OF 7