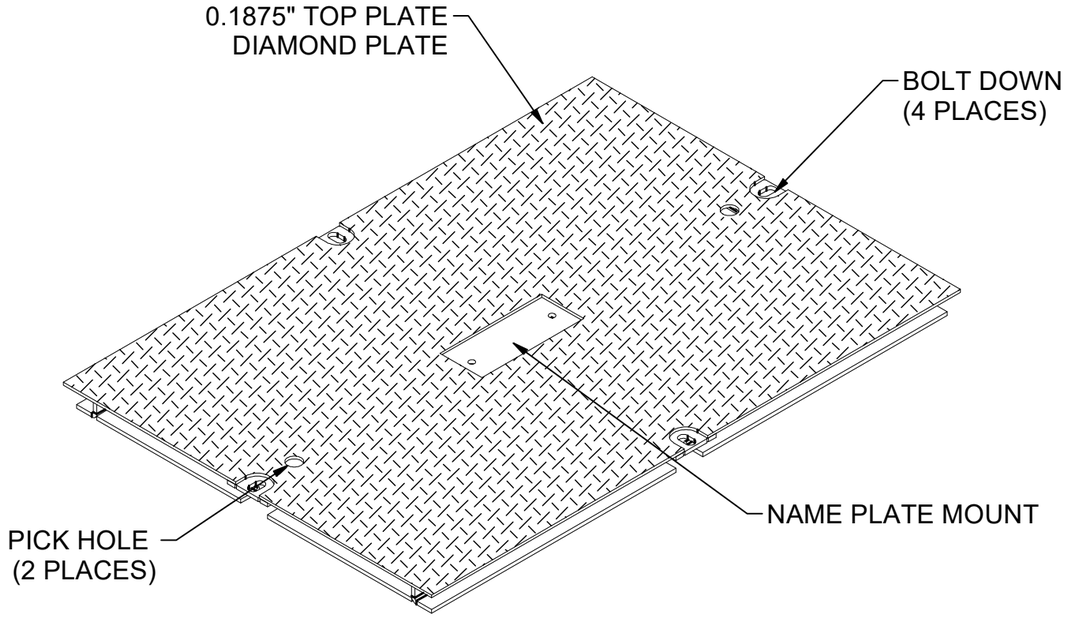

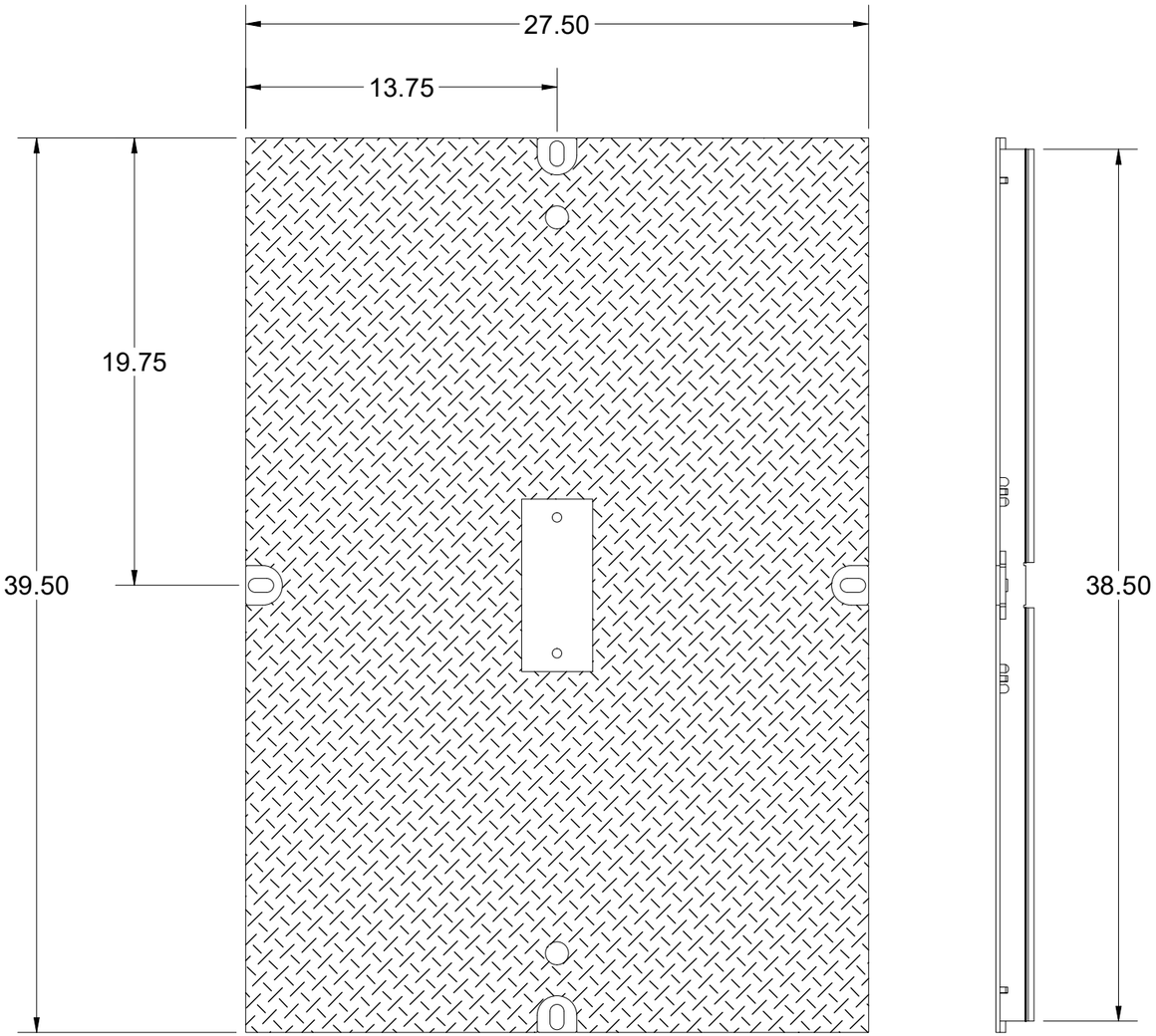

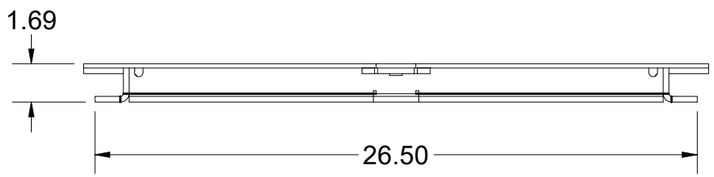

100006618.idw

ASTM C1802: Level 02

300 psf, or 600 lb load on 5.5" x 5.5" footprint restricted to areas of pedestrian use and light maintenance vehicles use, and other areas that are inaccessible to all other vehicle traffic.

SURFACE:	Diamond Plate	FINISH:	Galvanized
WEIGHT:	95.91 lbs	MARKING:	As Noted

JENSEN METALTECH
450 E. GLENDALE AVE. SPARKS. NV 89431
775-352-2716 FAX: 755-358-8127
JENSENMETALTECH.COM

©2020 Jensen Precast- All rights reserved.
All materials appearing as Jensen Precast documents and the like are proprietary work product and are protected under U.S. copyright and other laws.
Unless in conjunction with business conducted with Jensen Precast, any use of Jensen Precast work product without express, written consent is prohibited, and recipient is prohibited from distributing any and all work product to non-approved third parties under penalty of civil action.

DESCRIPTION: DAS1-SD-2436-D2-DP-G-FONT-(SC2436-PGV)

24x36 Door Assembly (ASTM Load Level 02, Single Door, Steel, Drag Off, Pickhole, Diamond Plate, Galvanized , , (SC2436-PGV))

REV:

SHEET: 1

PART NUMBER:	100006618	DRAWN BY:	A. Billett
CREATED:	1/7/2020	MODIFIED:	7/7/2020

BILL OF MATERIALS

ITEM	UNIT QTY	QTY	PART NUMBER	DESCRIPTION
1	1	1	100006621	DAS1-SD-2436-D2-DP-R-FONT-(SC2436-P)

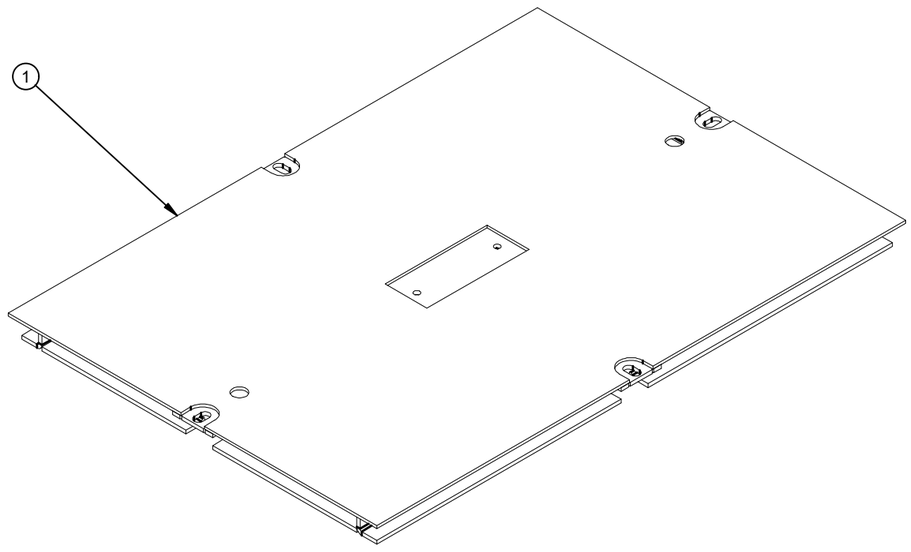

100006618.idw

MATERIAL FINISH: Galvanized	JENSEN METALTECH 450 E. GLENDALE AVE. SPARKS. NV 89431 775-352-2716 FAX: 755-358-8127 *JENSENMETALTECH.COM*	©2020 Jensen Precast- All rights reserved. All materials appearing as Jensen Precast documents and the like are proprietary work product and are protected under U.S. copyright and other laws. Unless in conjunction with business conducted with Jensen Precast, any use of Jensen Precast work product without express, written consent is prohibited, and recipient is prohibited from distributing any and all work product to non-approved third parties under penalty of civil action.	PART NUMBER & DESCRIPTION: 100006618 DAS1-SD-2436-D2-DP-G-FONT-(SC2436-PGV)	REV: A
MATERIAL SURFACE: Diamond Plate			WEIGHT: 95.91 Lbs / DRAWN BY: A. Billett	SHEET: 1
			CREATED: 1/7/2020 / MODIFIED: 7/7/2020	

BILL OF MATERIALS

ITEM	UNIT QTY	QTY	PART NUMBER	DESCRIPTION
1	1	1	200039243	Door Component Steel Plate, Top Nameplate
2	1	2	200039244	Door Component Steel Stiffener, Bar
3	1	2	200039242	Door Component Steel Channel
4	1	2	200039241	Door Component Steel Channel
5	1	4	200039240	BOLT DOUBLER 1.5 X 3
8	1	1	100007685	NAME PLATE BACKING PLATE

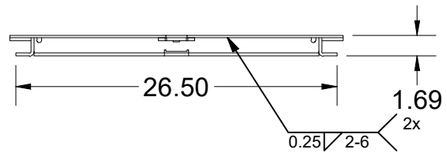

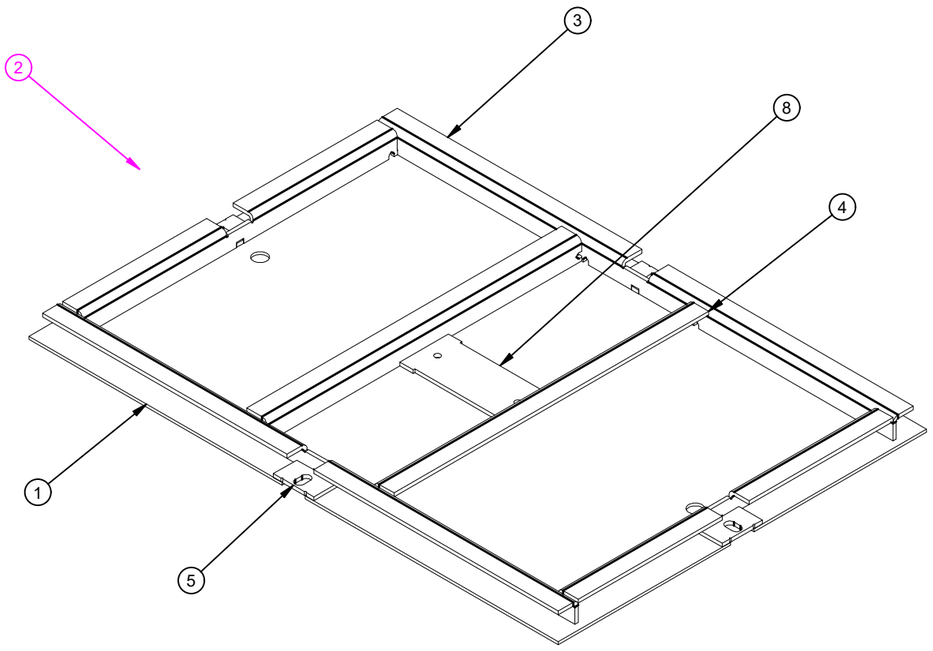

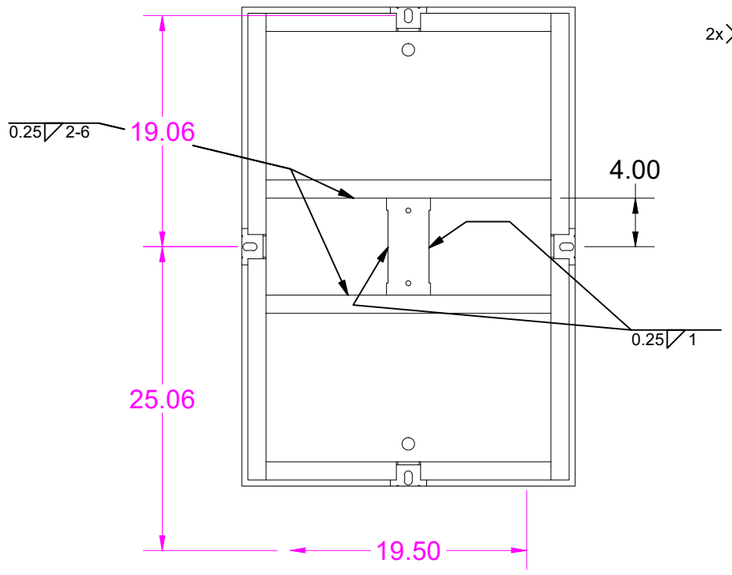

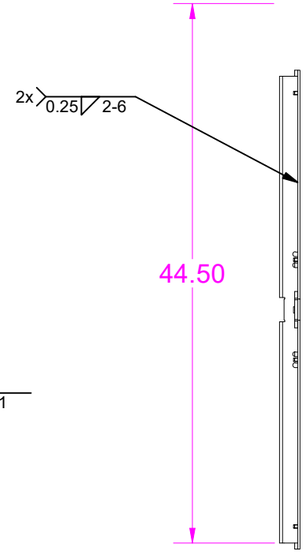

MATERIAL FINISH: Raw		PART NUMBER & DESCRIPTION: 100006621 DAS1-SD-2436-D2-DP-R-FONT-(SC2436-P)	REV: A
MATERIAL SURFACE: Diamond Plate	WEIGHT: 95.91 Lbs	DRAWN BY: A. Billett	SHEET: 2
	CREATED: 3/27/2019	MODIFIED: 7/7/2020	

JENSEN METALTECH
450 E. GLENDALE AVE. SPARKS. NV 89431
775-352-2716 FAX: 755-358-8127
JENSENMETALTECH.COM

©2020 Jensen Precast- All rights reserved. All materials appearing as Jensen Precast documents and the like are proprietary work product and are protected under U.S. copyright and other laws. Unless in conjunction with business conducted with Jensen Precast, any use of Jensen Precast work product without express, written consent is prohibited, and recipient is prohibited from distributing any and all work product to non-approved third parties under penalty of civil action.

100006618.idw

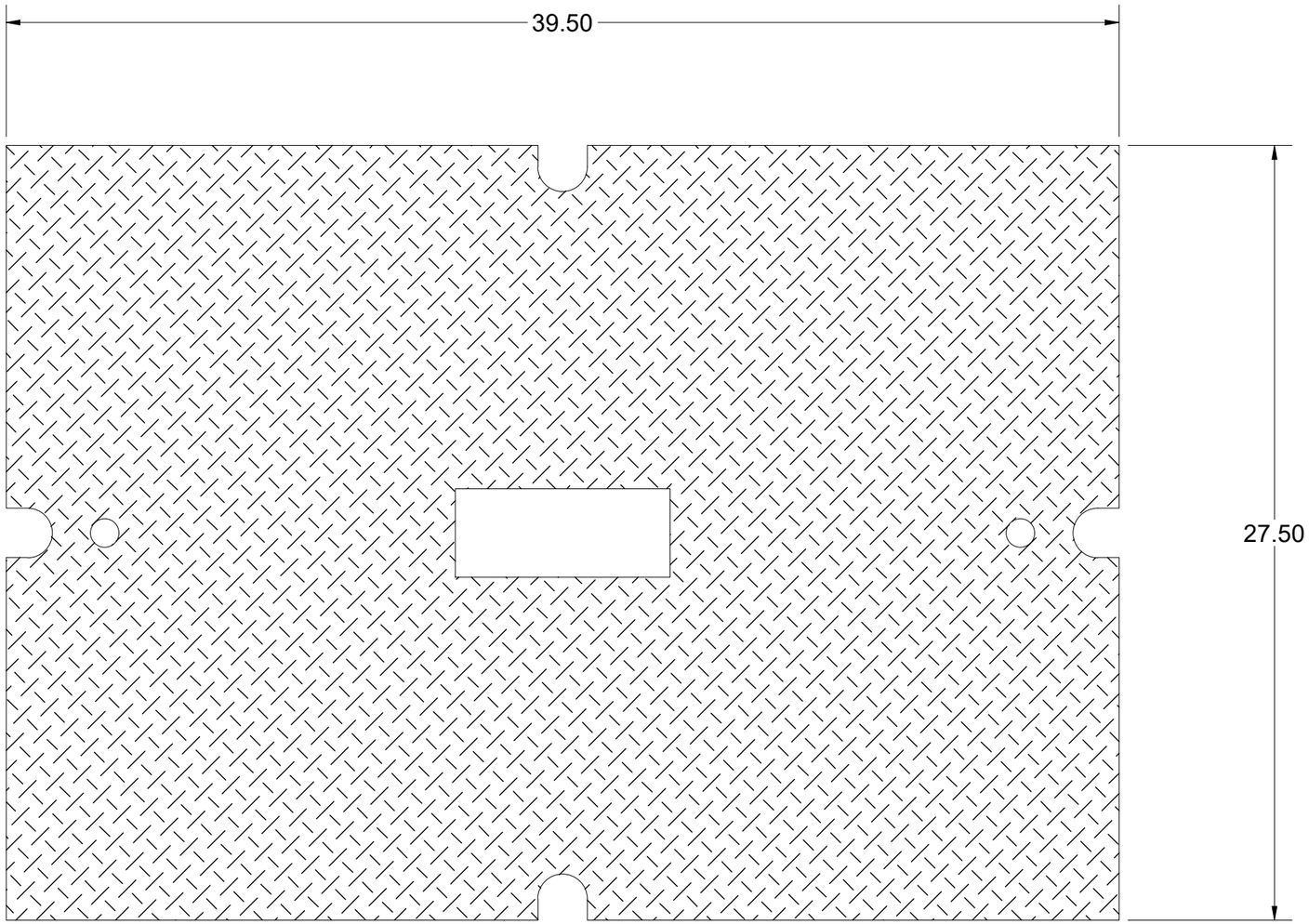

100006618.idw

BEND TABLE				MATERIAL IFS: 100007814
BEND RADIUS	V-OPENING	BEND ANGLE	BEND DEDUCTION	MATERIAL THK: 0.1875
-	-	-	-	MAT DESCRIPTION: SHT STL CQ DP RAW .1875

JENSEN METALTECH
450 E. GLENDALE AVE. SPARKS. NV 89431
775-352-2716 FAX: 755-358-8127
JENSENMETALTECH.COM

©2020 Jensen Precast- All rights reserved.
All materials appearing as Jensen Precast documents and the like are proprietary work product and are protected under U.S. copyright and other laws.
Unless in conjunction with business conducted with Jensen Precast, any use of Jensen Precast work product without express, written consent is prohibited, and recipient is prohibited from distributing any and all work product to non-approved third parties under penalty of civil action.

NAME & DESCRIPTION:	200039243 Door Component Steel Plate, Top Nameplate	REV:
WEIGHT: 61.622 lbmass	DRAWN BY: A. Billett	SHEET:
CREATED: 3/27/2019	MODIFIED: 7/7/2020	3 OF 7

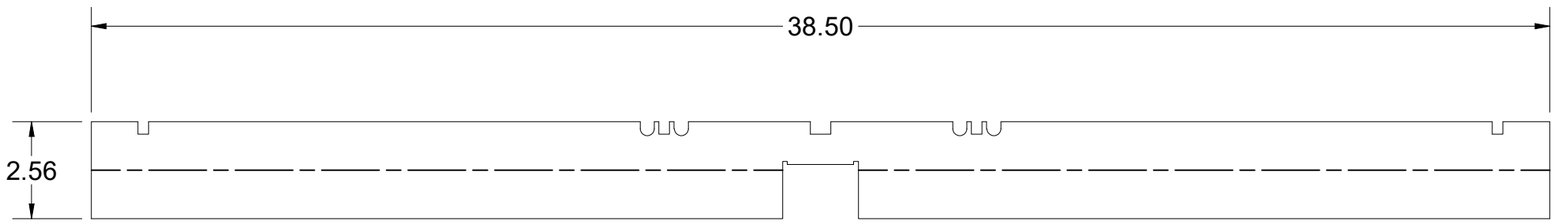

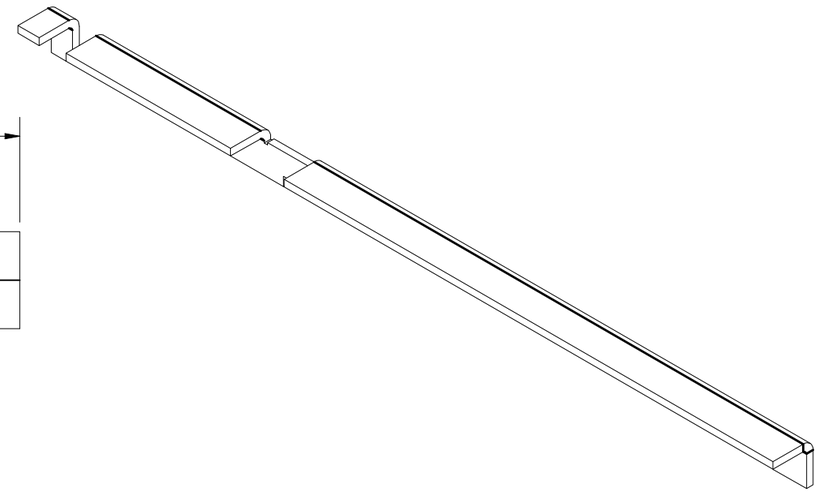

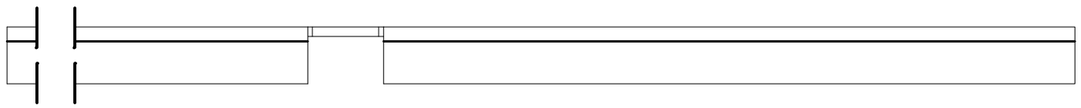

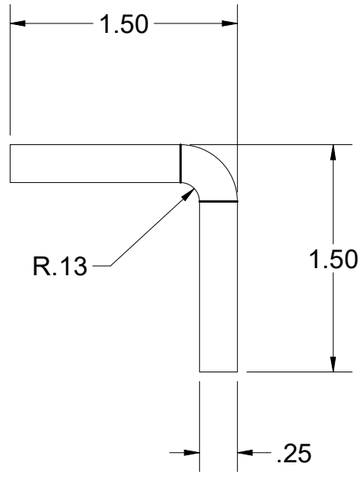

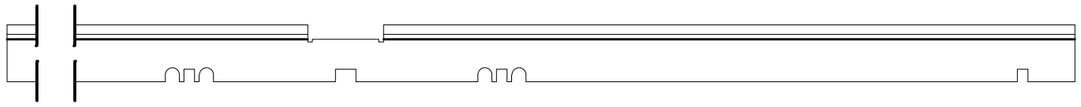

BEND TABLE				MATERIAL IFS: 100007735
BEND RADIUS	V-OPENING	BEND ANGLE	BEND DEDUCTION	MATERIAL THK: 0.25
0.125	2"	90	0.440	MAT DESCRIPTION: STL ASTM A36 SM-HRPO RAW .250

JENSEN METALTECH
450 E. GLENDALE AVE. SPARKS. NV 89431
775-352-2716 FAX: 755-358-8127
JENSENMETALTECH.COM

©2020 Jensen Precast- All rights reserved.
All materials appearing as Jensen Precast documents and the like are proprietary work product and are protected under U.S. copyright and other laws.
Unless in conjunction with business conducted with Jensen Precast, any use of Jensen Precast work product without express, written consent is prohibited, and recipient is prohibited from distributing any and all work product to non-approved third parties under penalty of civil action.

NAME & DESCRIPTION: 200039242 Door Component Steel Channel		REV: A
WEIGHT: 6.932 lbmass	DRAWN BY: A. Billett	SHEET: 4 OF 7
CREATED: 3/27/2019	MODIFIED: 7/7/2020	

100006618.idw

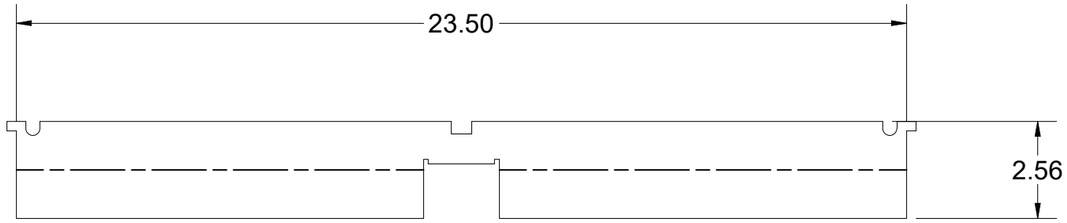

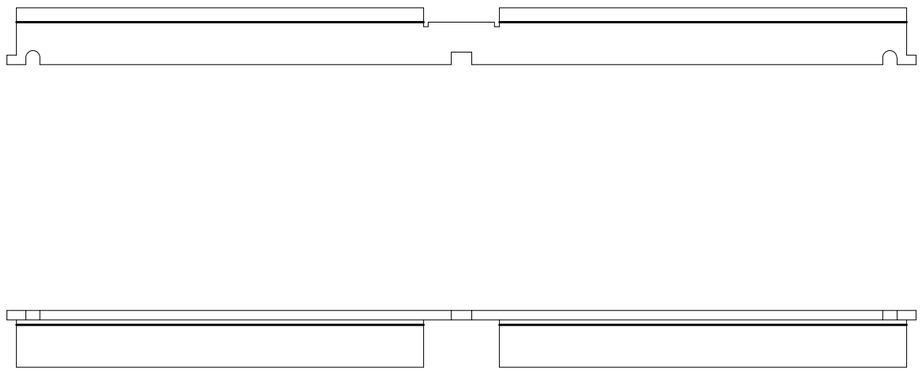

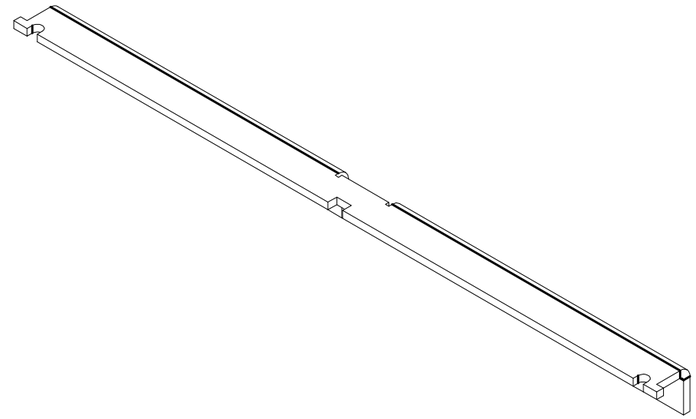

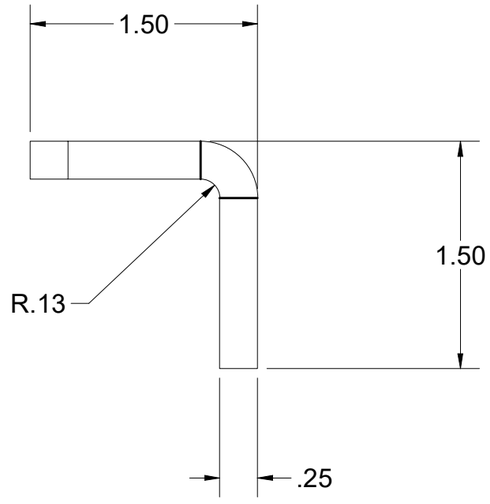

BEND TABLE				MATERIAL IFS: 100007735
BEND RADIUS	V-OPENING	BEND ANGLE	BEND DEDUCTION	MATERIAL THK: 0.25
0.125	2"	90	0.440	MAT DESCRIPTION: STL ASTM A36 SM-HRPO RAW .250

JENSEN METALTECH
450 E. GLENDALE AVE. SPARKS. NV 89431
775-352-2716 FAX: 755-358-8127
JENSENMETALTECH.COM

©2020 Jensen Precast- All rights reserved.
All materials appearing as Jensen Precast documents and the like are proprietary work product and are protected under U.S. copyright and other laws.
Unless in conjunction with business conducted with Jensen Precast, any use of Jensen Precast work product without express, written consent is prohibited, and recipient is prohibited from distributing any and all work product to non-approved third parties under penalty of civil action.

NAME & DESCRIPTION:	200039244 Door Component Steel Stiffener, Bar	REV:
WEIGHT: 4.170 lbmass	DRAWN BY: A. Billett	SHEET:
CREATED: 3/27/2019	MODIFIED: 7/7/2020	5 OF 7

100006618.idw

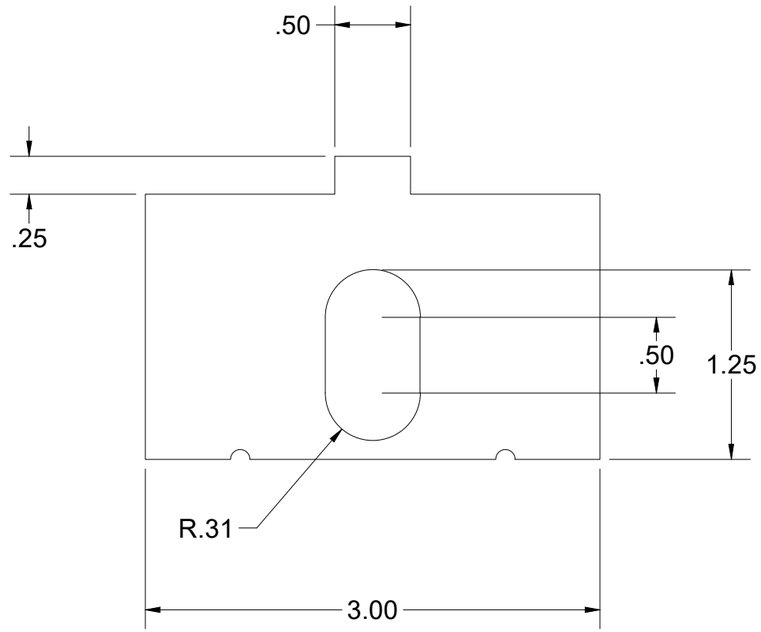

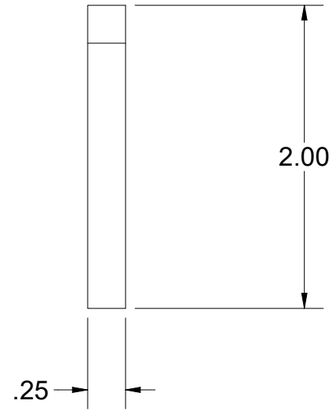

BEND TABLE				MATERIAL IFS: 100007735				
BEND RADIUS	V-OPENING	BEND ANGLE	BEND DEDUCTION	MATERIAL THK: 0.25				
-	-	-	-	MAT DESCRIPTION: STL ASTM A36 SM-HRPO RAW .250				

JENSEN METALTECH
450 E. GLENDALE AVE. SPARKS. NV 89431
775-352-2716 FAX: 755-358-8127
JENSENMETALTECH.COM

©2020 Jensen Precast- All rights reserved.
All materials appearing as Jensen Precast documents and the like are proprietary work product and are protected under U.S. copyright and other laws.
Unless in conjunction with business conducted with Jensen Precast, any use of Jensen Precast work product without express, written consent is prohibited, and recipient is prohibited from distributing any and all work product to non-approved third parties under penalty of civil action.

NAME & DESCRIPTION: 200039240 BOLT DOUBLER 1.5 X 3		REV: A
WEIGHT: 0.337 lbmass	DRAWN BY: A. Billett	SHEET: 6 OF 7
CREATED: 3/27/2019	MODIFIED: 7/7/2020	

100006618.idw

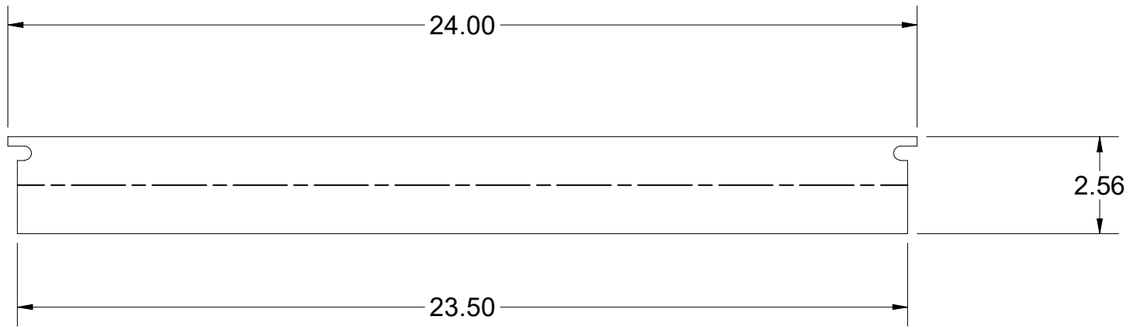

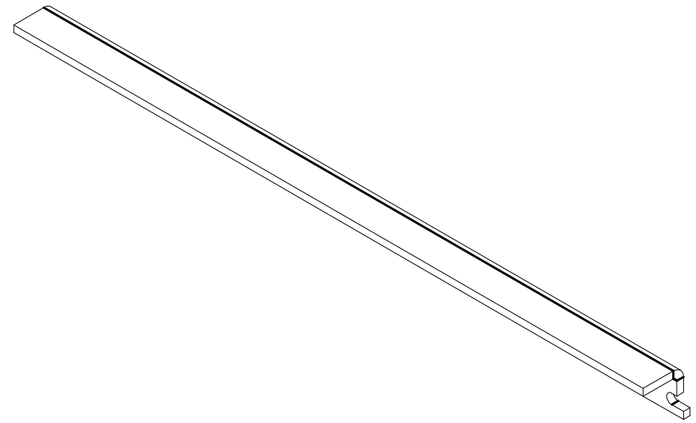

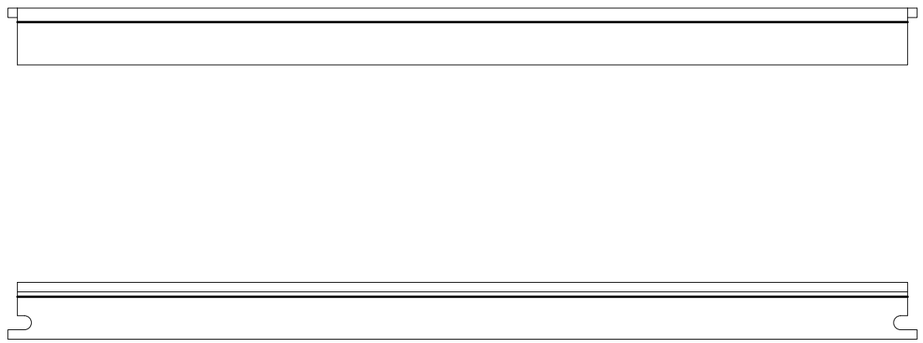

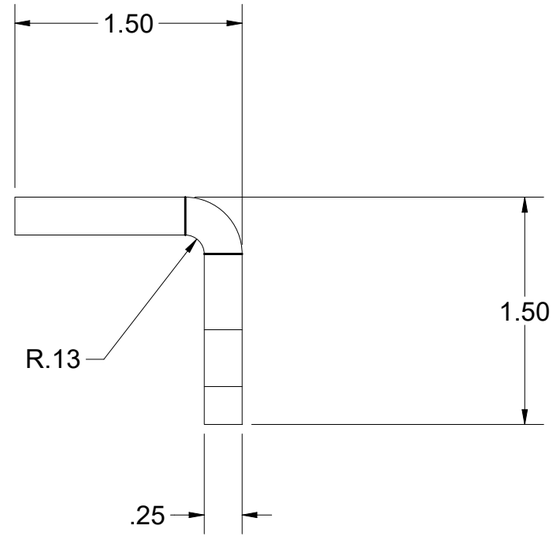

BEND TABLE			
BEND RADIUS	V-OPENING	BEND ANGLE	BEND DEDUCTION
0.125	2"	90	0.440

MATERIAL IFS: 100007735

MATERIAL THK: 0.25

MAT DESCRIPTION: STL ASTM A36 SM-HRPO RAW .250

JENSEN METALTECH
450 E. GLENDALE AVE. SPARKS. NV 89431
775-352-2716 FAX: 755-358-8127
JENSENMETALTECH.COM

©2020 Jensen Precast- All rights reserved. All materials appearing as Jensen Precast documents and the like are proprietary work product and are protected under U.S. copyright and other laws.
Unless in conjunction with business conducted with Jensen Precast, any use of Jensen Precast work product without express, written consent is prohibited, and recipient is prohibited from distributing any and all work product to non-approved third parties under penalty of civil action.

NAME & DESCRIPTION: 200039241 Door Component Steel Channel

REV: A

WEIGHT: 4.400 lbmass

DRAWN BY: A. Billett

CREATED: 3/27/2019

MODIFIED: 7/7/2020

SHEET: 7 OF 7

100006618.idw