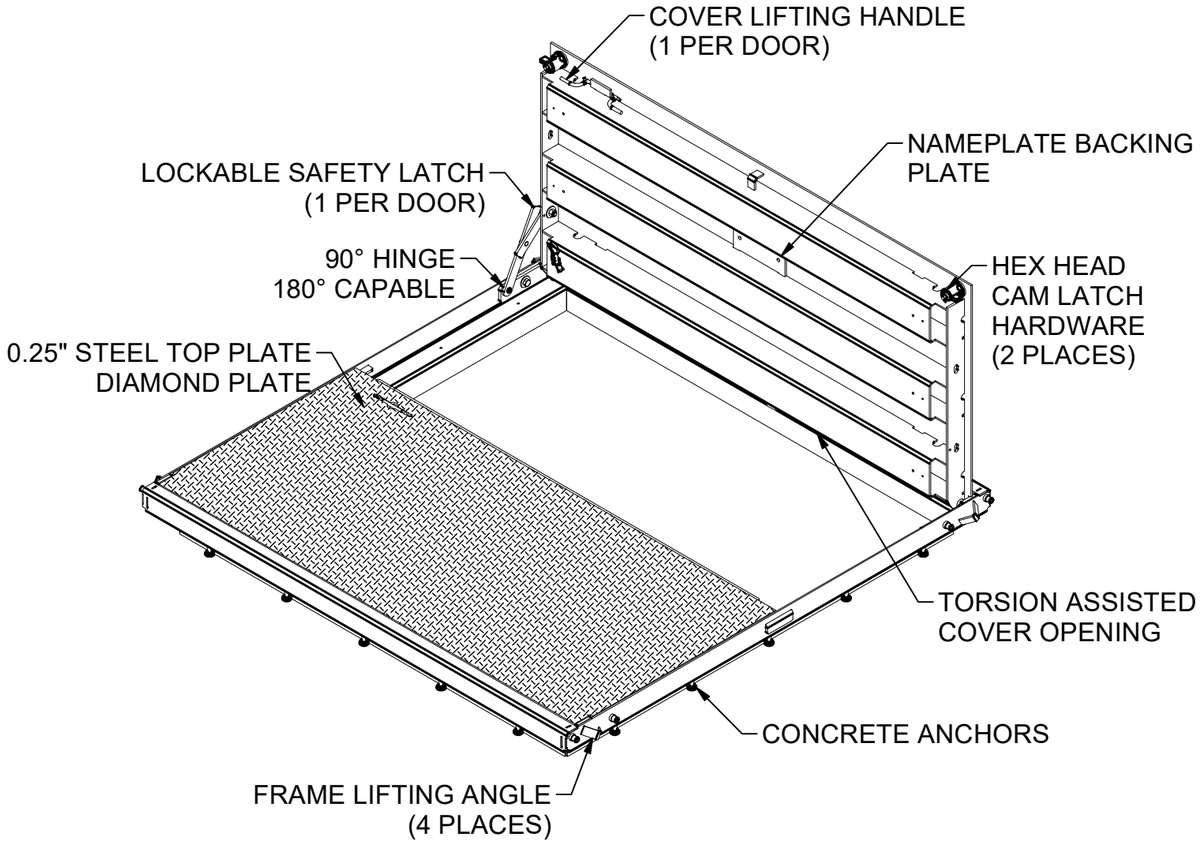


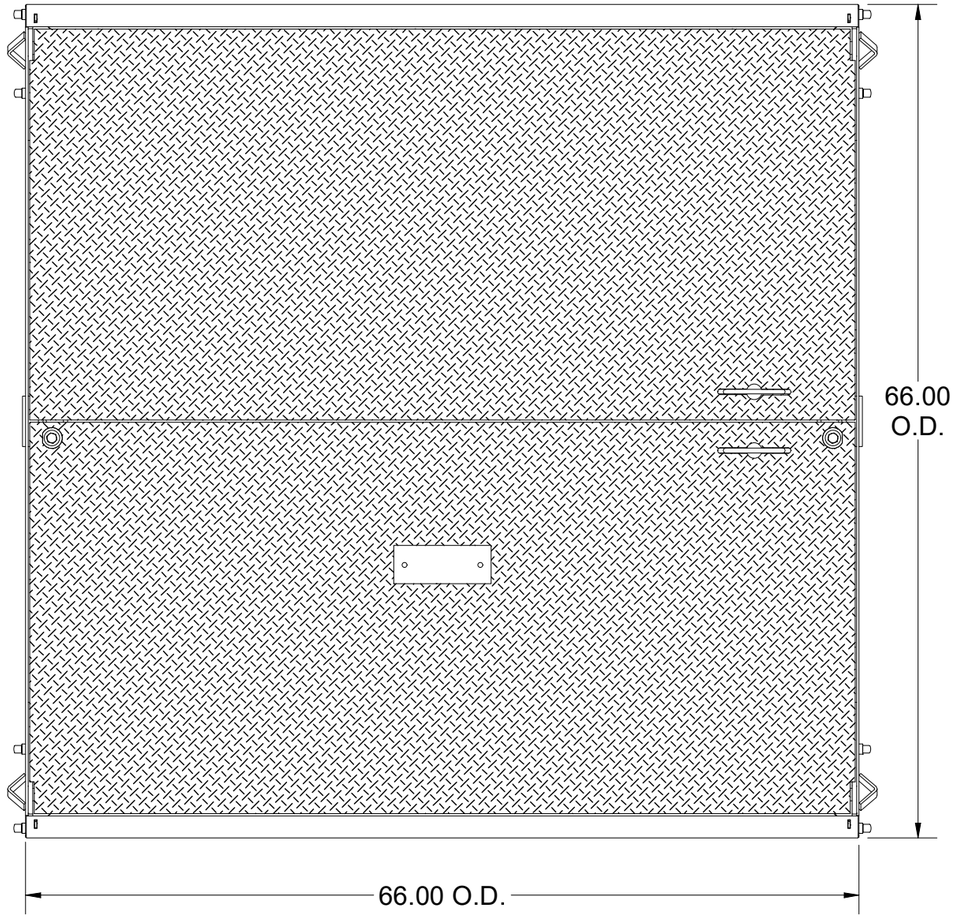


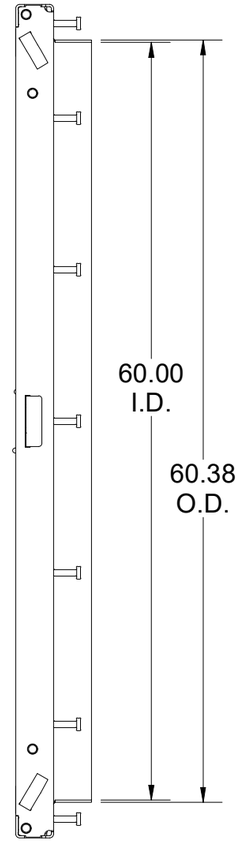


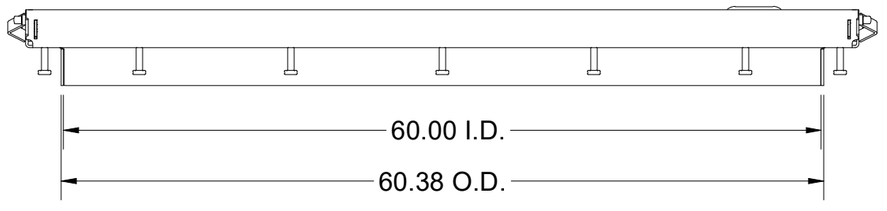


100006605.idw

ASTM C1802: Level 04

16,000 lb load on 10" x 20" footprint, without impact restricted to parking spaces and areas within close proximity of roadways.

| | | | |
|---|---|---|---|
| SURFACE: | Diamond Plate | FINISH: | Galvanized |
| WEIGHT: | 725.31 lbs | MARKING: | As Noted |

JENSEN METALTECH
450 E. GLENDALE AVE. SPARKS. NV 89431
775-352-2716 FAX: 755-358-8127
JENSENMETALTECH.COM

©2021 Jensen Precast- All rights reserved. All materials appearing as Jensen Precast documents and the like are proprietary work product and are protected under U.S. copyright and other laws.
Unless in conjunction with business conducted with Jensen Precast, any use of Jensen Precast work product without express, written consent is prohibited, and recipient is prohibited from distributing any and all work product to non-approved third parties under penalty of civil action.

DESCRIPTION: CAS2-6060-CH4-DP-G-FONT-OH06-(10-30-55THG)

60x60 Cover Assembly (ASTM Load Level 04, 2 Door, Steel, Hinged, Diamond Plate, Galvanized , N/A, N/A) OH 06 (10-30-55THG)

REV:

SHEET: 1

| | | | |
|---|---|---|---|
| PART NUMBER: | 100006605 | DRAWN BY: | E.Massey |
| CREATED: | 12/6/2018 | MODIFIED: | 6/14/2021 |

# BILL OF MATERIALS

| ITEM | UNIT QTY | QTY | PART NUMBER | DESCRIPTION |
|---|---|---|---|---|
| 1 | 1 | 1 | 200053432 | DAS2-B-6060-H4-DP-R |
| 2 | 1 | 1 | 200053437 | DAS2-T-6060-H4-DP-R-FONT |
| 3 | 1 | 1 | 200053439 | FAS-6060-CH4-R-OH06 |
| 4 | 1 | 4 | 100003823 | BOLT HEX 1/2-13 UNC 1.5 ZINC |
| 5 | 1 | 4 | 100007869 | BOLT SHCS 1/2-13 X 1-3/4 SS |
| 6 | 1 | 8 | 100007873 | BOLT SHCS 3/8-16 X 1-1/4 PLATED |
| 7 | 1 | 2 | 100007876 | BOLT SHOULDER 3/8 X 1/2 WITH 5/16-18 THREADS GR 5 PLATED |
| 8 | 1 | 8 | 100007939 | CAP VINYL .467 X 1/2 |
| 9 | 1 | 2 | 100007918 | COTTER PIN 0.094DIA X 1-1/4 |
| 10 | 1 | 2 | 100005059 | HEX BOLT .50-13 UNC 2.5 ZINC PLATED |
| 11 | 1 | 2 | 100007492 | HEX NUT NYLOCK 1/2-13 GR-5 ZINC-PLATED |
| 12 | 1 | 2 | 100007729 | HEX NUT SLOTTED CASTLE HEAD 1/2-13 SS |
| 13 | 1 | 2 | 100007659 | HINGE ASSY STL LEFT .50 |
| 14 | 1 | 2 | 100007658 | HINGE ASSY STL RIGHT .438 |
| 15 | 1 | 2 | 100007924 | LANYARD 3/64 W/PIN COATED SS |
| 16 | 1 | 2 | 100007857 | NUT FINGER 1/2-13 BRASS |
| 17 | 1 | 2 | 100007681 | OFFSET SPRING MOUNT .50 |
| 18 | 1 | 2 | 100007882 | RIVET GRIP STEEL 3/16 X 7/16 LRG HD |
| 19 | 1 | 8 | 100007859 | RIVET NUT 3/8-16 FLAT KNURLED |
| 20 | 1 | 2 | 100007933 | SAFETY LATCH ASSY FOR UNI AND 90 D HINGE |
| 21 | 1 | 2 | 100007915 | SPRING COMPRESSION 055 X 5/8 X 7/8 LONG |
| 22 | 1 | 2 | 100007670 | SPRING MOUNT ASSY .438 |
| 23 | 1 | 2 | 100007727 | TORSION HEX ROD 1/2 X 36 RAW |
| 24 | 1 | 2 | 100007726 | TORSION HEX ROD 7/16 X 36 RAW |
| 25 | 1 | 8 | 100011418 | WASHER FLAT 1/2 X 1 3/8 USS TYPE A ZINC |

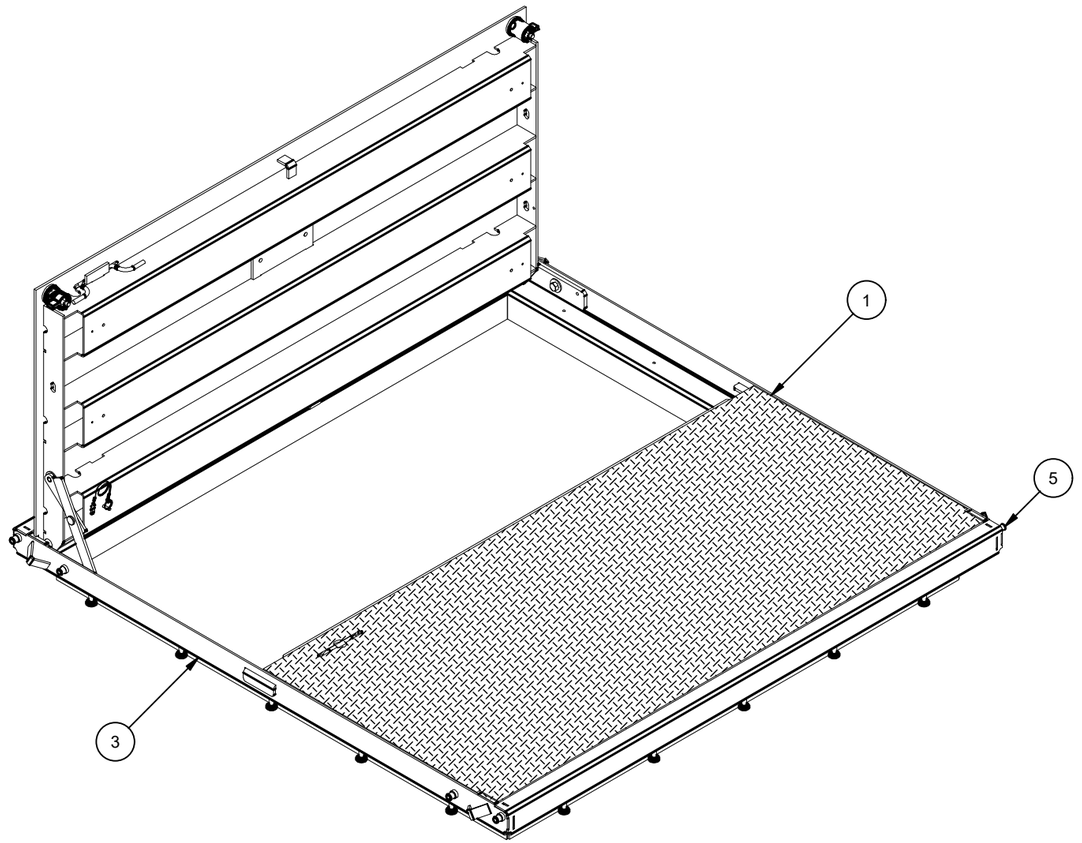


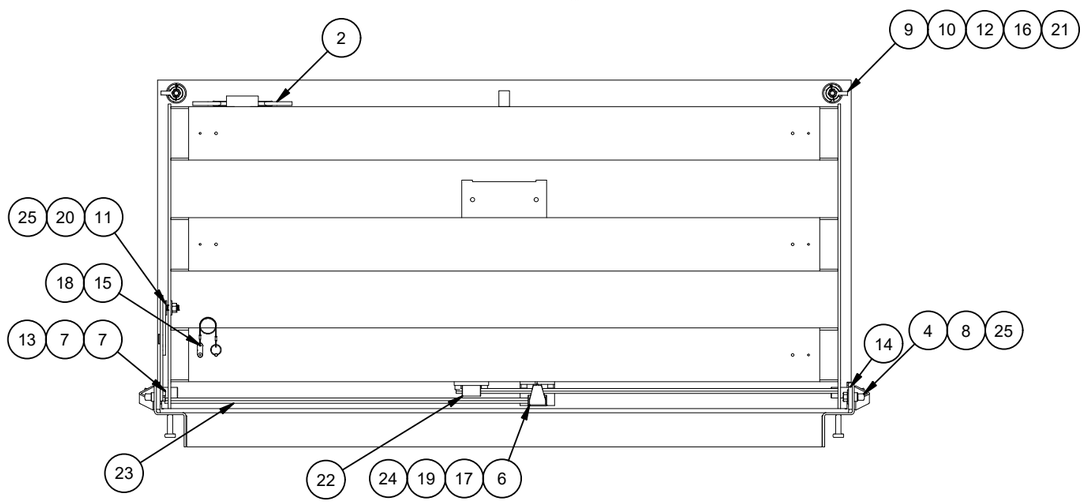


100006605.idw

| | | | | |
|---|---|---|---|---|
| MATERIAL FINISH: Galvanized | JENSEN METALTECH<br>450 E. GLENDALE AVE. SPARKS. NV 89431<br>775-352-2716 FAX: 755-358-8127<br>*JENSENMETALTECH.COM* | ©2021 Jensen Precast- All rights reserved. All materials appearing as Jensen Precast documents and the like are proprietary work product and are protected under U.S. copyright and other laws. Unless in conjunction with business conducted with Jensen Precast, any use of Jensen Precast work product without express, written consent is prohibited, and recipient is prohibited from distributing any and all work product to non-approved third parties under penalty of civil action. | PART NUMBER & DESCRIPTION: 100006605<br>CAS2-6060-CH4-DP-G-FONT-OH06-(10-30-55THG) | REV: |
| MATERIAL SURFACE: Diamond Plate | | | WEIGHT: 725.31 Lbs<br>CREATED: 12/6/2018 | DRAWN BY: E.Massey<br>MODIFIED: 6/14/2021 | SHEET: 2 |

# BURN LIST - BOM

| QTY | PART NUMBER | DESCRIPTION | STOCK NUMBER | MATERIAL | MASS |
|---|---|---|---|---|---|
| 1 | 200020976 | Door Component Steel Lap Bar 60in | 100007735 | STL ASTM A36 SM-HRPO RAW .250 | 8.722 lbmass |
| 2 | 200053433 | Door Component Steel Channel | 100007821 | SHT STL GR80 SM-HRPO RAW .1875 | 37.208 lbmass |
| 4 | 200053434 | Door Component Steel Channel | 100007821 | SHT STL GR80 SM-HRPO RAW .1875 | 37.083 lbmass |
| 4 | 200053435 | Door Component Steel Side Bar | 100007735 | STL ASTM A36 SM-HRPO RAW .250 | 4.846 lbmass |
| 1 | 200053436 | Door Component Steel Plate, Bottom | 100007736 | SHT STL CQ DP RAW .25 | 157.922 lbmass |
| 1 | 200053438 | Door Component Steel Plate, Top | 100007736 | SHT STL CQ DP RAW .25 | 155.762 lbmass |
| 2 | 200053440 | Frame Component Steel Frame End, Cast In | 100007734 | STL ASTM A36 SM-HRPO 60X120 RAW .1875 | 33.859 lbmass |
| 2 | 200053441 | Frame Component Steel Frame Side, Cast In | 100007734 | STL ASTM A36 SM-HRPO 60X120 RAW .1875 | 28.586 lbmass |

100006605.idw

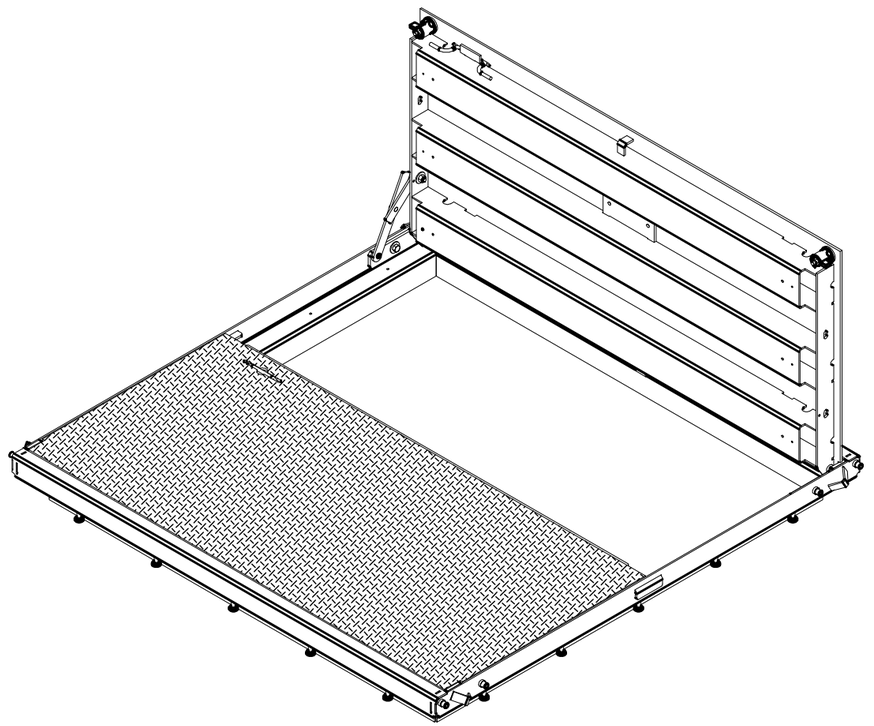

MATERIAL FINISH: Galvanized

MATERIAL SURFACE: Diamond Plate

JENSEN METALTECH
450 E. GLENDALE AVE. SPARKS. NV 89431
775-352-2716 FAX: 755-358-8127
*JENSENMETALTECH.COM*

©2021 Jensen Precast- All rights reserved.
All materials appearing as Jensen Precast documents and the like are proprietary work product and are protected under U.S. copyright and other laws.
Unless in conjunction with business conducted with Jensen Precast, any use of Jensen Precast work product without express, written consent is prohibited, and recipient is prohibited from distributing any and all work product to non-approved third parties under penalty of civil action.

PART NUMBER & DESCRIPTION: 100006605
CAS2-6060-CH4-DP-G-FONT-OH06-(10-30-55THG)

REV:

WEIGHT: 725.31 Lbs

DRAWN BY: E.Massey

CREATED: 12/6/2018

MODIFIED: 6/14/2021

SHEET: 3

# BILL OF MATERIALS

| ITEM | UNIT QTY | QTY | PART NUMBER | DESCRIPTION |
|---|---|---|---|---|
| 1 | 1 | 1 | 200053438 | Door Component Steel Plate, Top |
| 2 | 1 | 2 | 200053434 | Door Component Steel Channel |
| 3 | 1 | 1 | 100007644 | LEAF PULL HANDLE A36 3/8IN DIAMETER |
| 4 | 1 | 1 | 100007647 | LIFTING BRACKET STEEL LEAF |
| 5 | 1 | 1 | 100007646 | HANDLE RETAINER STL |
| 6 | 1 | 2 | 100007970 | CAM TOWER CAST STEEL |
| 7 | 1 | 1 | 200053433 | Door Component Steel Channel |
| 8 | 1 | 2 | 200053435 | Door Component Steel Side Bar |
| 9 | 1 | 1 | 100007685 | NAME PLATE BACKING PLATE |

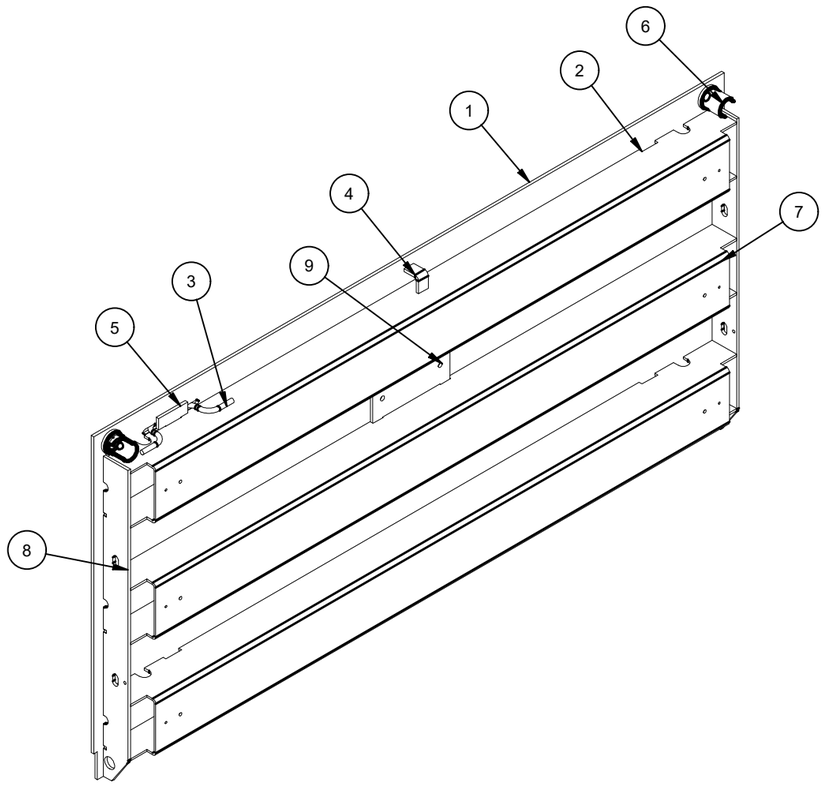


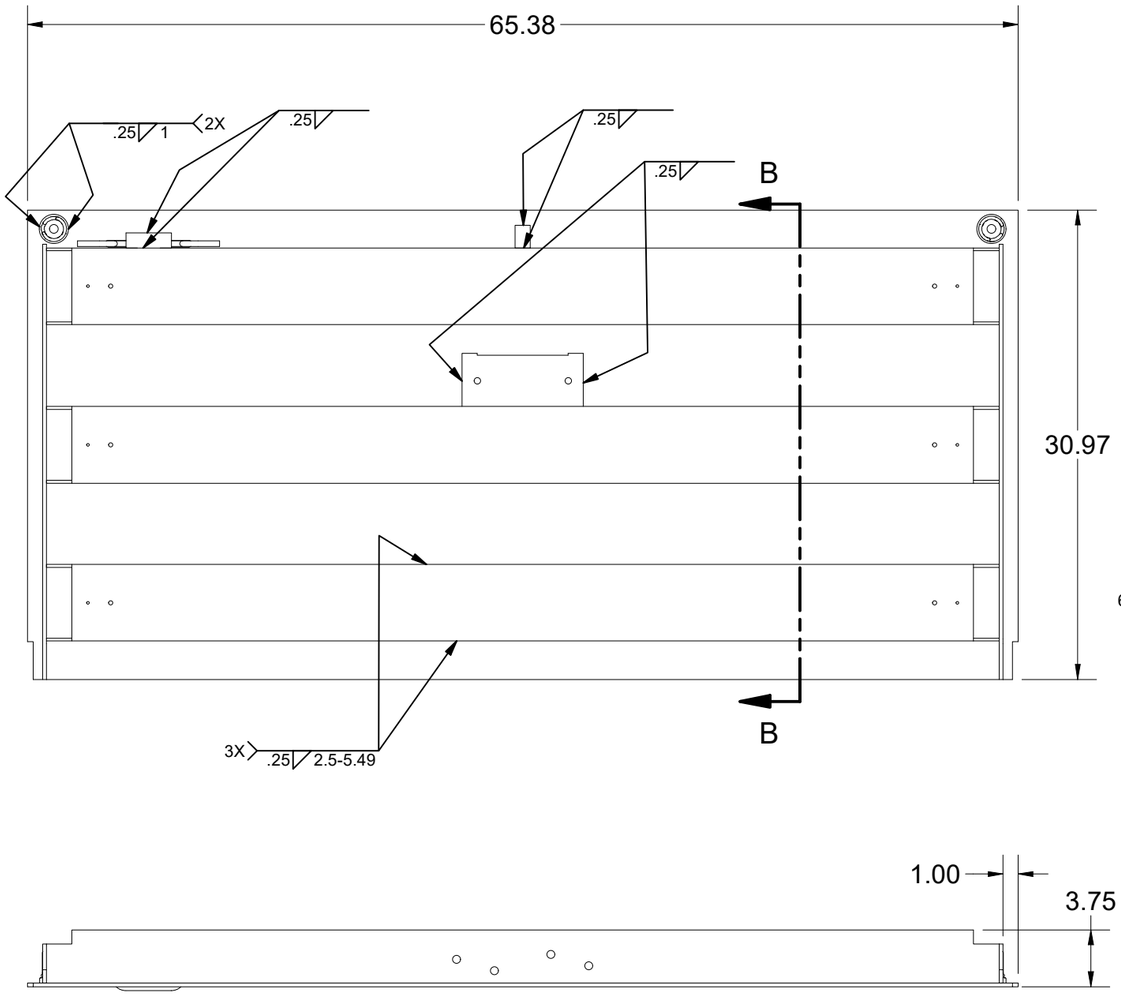


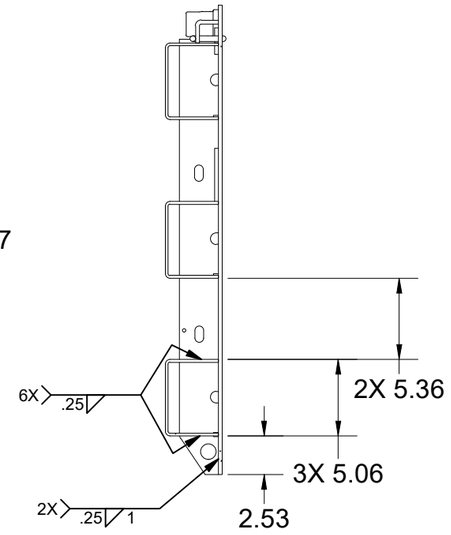


SECTION B-B




100006605.idw

| | | | |
|---|---|---|---|
| MATERIAL FINISH: Raw | JENSEN METALTECH<br>450 E. GLENDALE AVE. SPARKS. NV 89431<br>775-352-2716 FAX: 755-358-8127<br>*JENSENMETALTECH.COM* | ©2021 Jensen Precast- All rights reserved. All materials appearing as Jensen Precast documents and the like are proprietary work product and are protected under U.S. copyright and other laws. Unless in conjunction with business conducted with Jensen Precast, any use of Jensen Precast work product without express, written consent is prohibited, and recipient is prohibited from distributing any and all work product to non-approved third parties under penalty of civil action. | PART NUMBER & DESCRIPTION: 200053437 DAS2-T-6060-H4-DP-R-FONT |
| MATERIAL SURFACE: Diamond Plate | | | WEIGHT: 280.52 Lbs<br>DRAWN BY: E.Massey<br>CREATED: 4/23/2018<br>MODIFIED: 6/14/2021 |

REV: A-1

SHEET: 4

# BILL OF MATERIALS

| ITEM | UNIT QTY | QTY | FILE NAME | DESCRIPTION |
|---|---|---|---|---|
| 1 | 1 | 1 | 200053433.ipt | Door Component Steel Channel |
| 2 | 1 | 2 | 200053434.ipt | Door Component Steel Channel |
| 3 | 1 | 1 | 200020976.ipt | Door Component Steel Lap Bar 60in |
| 4 | 1 | 1 | 200053436.ipt | Door Component Steel Plate, Bottom |
| 5 | 1 | 2 | 200053435.ipt | Door Component Steel Side Bar |
| 6 | 1 | 1 | 100007644.ipt | LEAF PULL HANDLE A36 3/8IN DIAMETER |
| 7 | 1 | 2 | 100007647.ipt | LIFTING BRACKET STEEL LEAF |

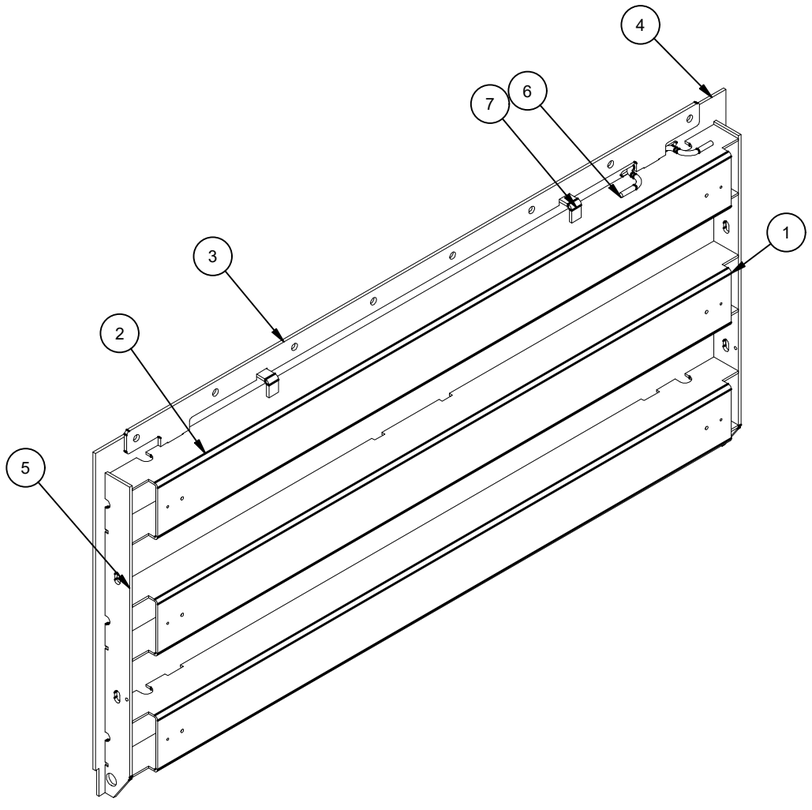


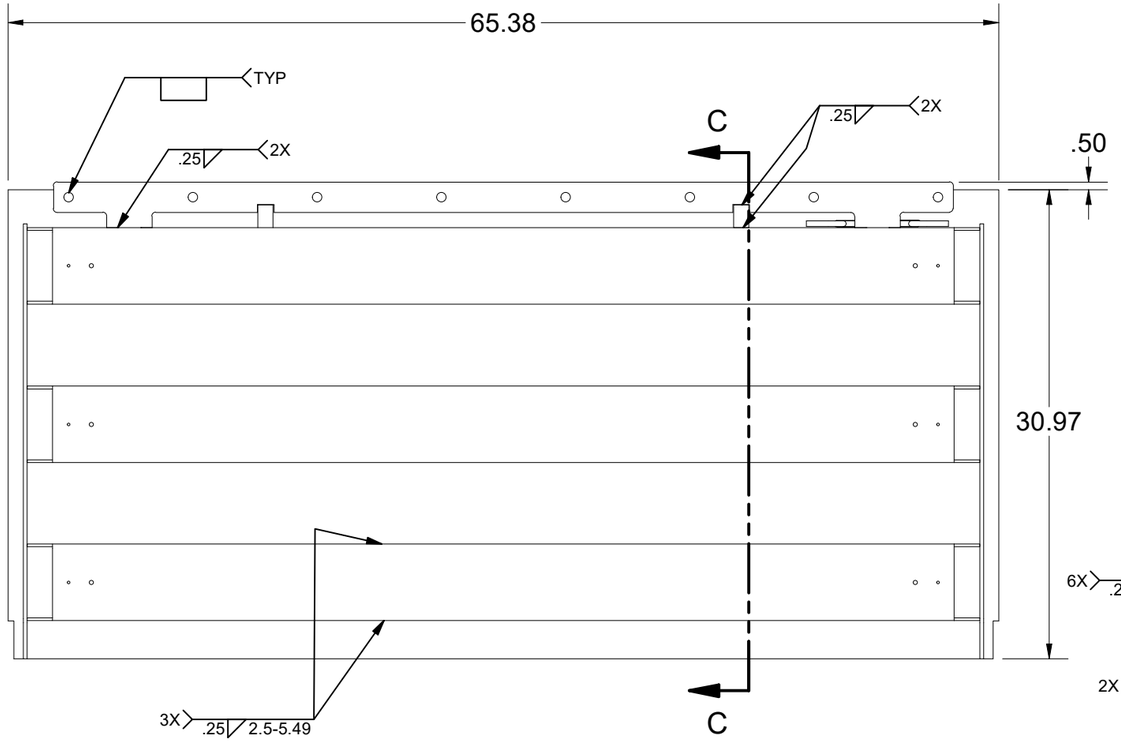


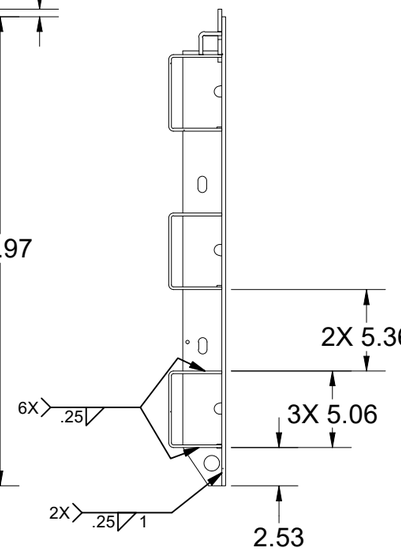


SECTION C-C

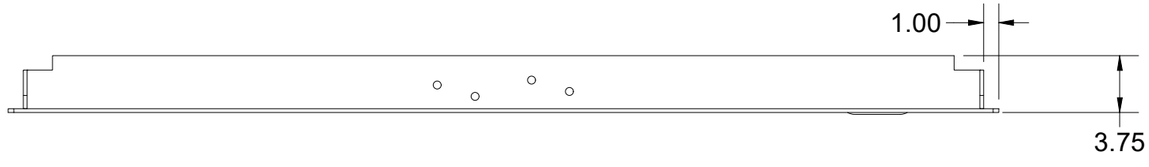


100006605.idw

| | | | |
|---|---|---|---|
| MATERIAL FINISH: Raw | JENSEN METALTECH | ©2021 Jensen Precast- All rights reserved. All materials appearing as Jensen Precast documents and the like are proprietary work product and are protected under U.S. copyright and other laws. Unless in conjunction with business conducted with Jensen Precast, any use of Jensen Precast work product without express, written consent is prohibited, and recipient is prohibited from distributing any and all work product to non-approved third parties under penalty of civil action. | PART NUMBER & DESCRIPTION: 200053432 DAS2-B-6060-H4-DP-R / REV: A-1 |
| MATERIAL SURFACE: Diamond Plate | 450 E. GLENDALE AVE. SPARKS. NV 89431<br>775-352-2716 FAX: 755-358-8127<br>*JENSENMETALTECH.COM* | | WEIGHT: 288.13 Lbs / DRAWN BY: E.Massey / SHEET: 5 |
| | | | CREATED: 4/23/2018 / MODIFIED: 6/14/2021 |

# BILL OF MATERIALS

| ITEM | UNIT QTY | QTY | PART NUMBER | DESCRIPTION |
|---|---|---|---|---|
| 1 | 1 | 4 | 200018691 | FRAME BOLT DOUBLER SLOT |
| 2 | 1 | 2 | 100007636 | FRAME LATCH ANGLE - A36 - 4IN LONG |
| 3 | 1 | 4 | 100007641 | FRAME LIFTING BRACKET |
| 4 | 1 | 2 | 200053440 | Frame Component Steel Frame End, Cast In |
| 5 | 1 | 2 | 200053441 | Frame Component Steel Frame Side, Cast In |
| 6 | 1 | 8 | 100007728 | NUT SELF-CLINCH 1/2-13 S-0813-1 RAW |
| 7 | 1 | 20 | 100007889 | STUD NELSON WELD H4L-HEADED A36 1/2X2-1/8 |

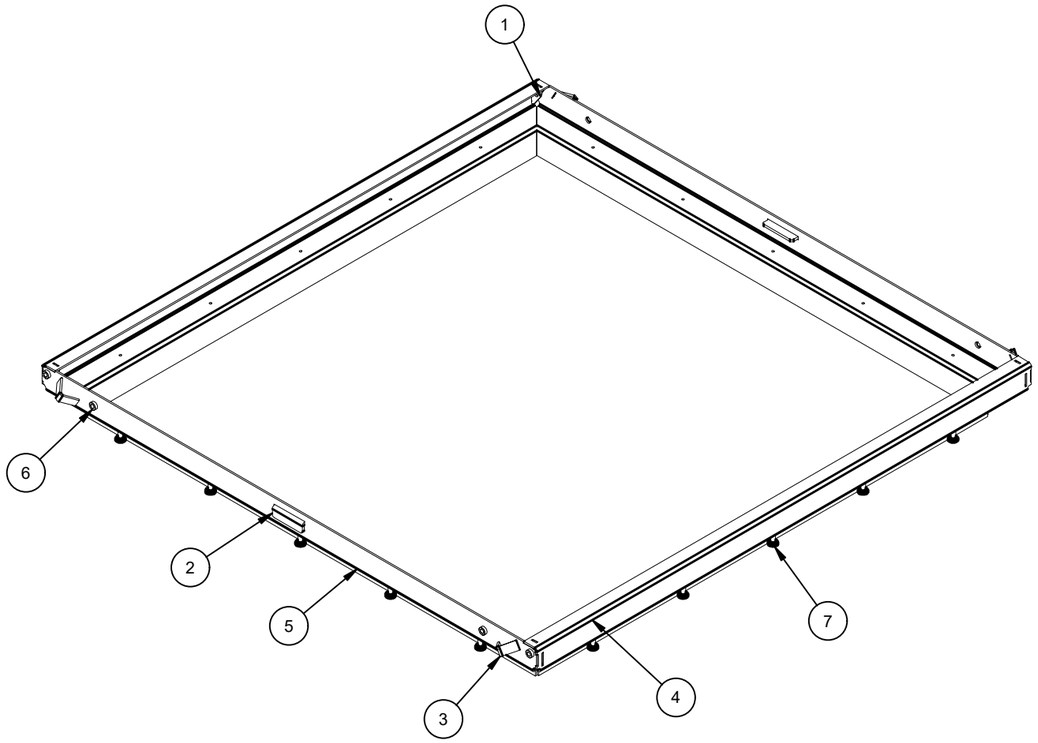


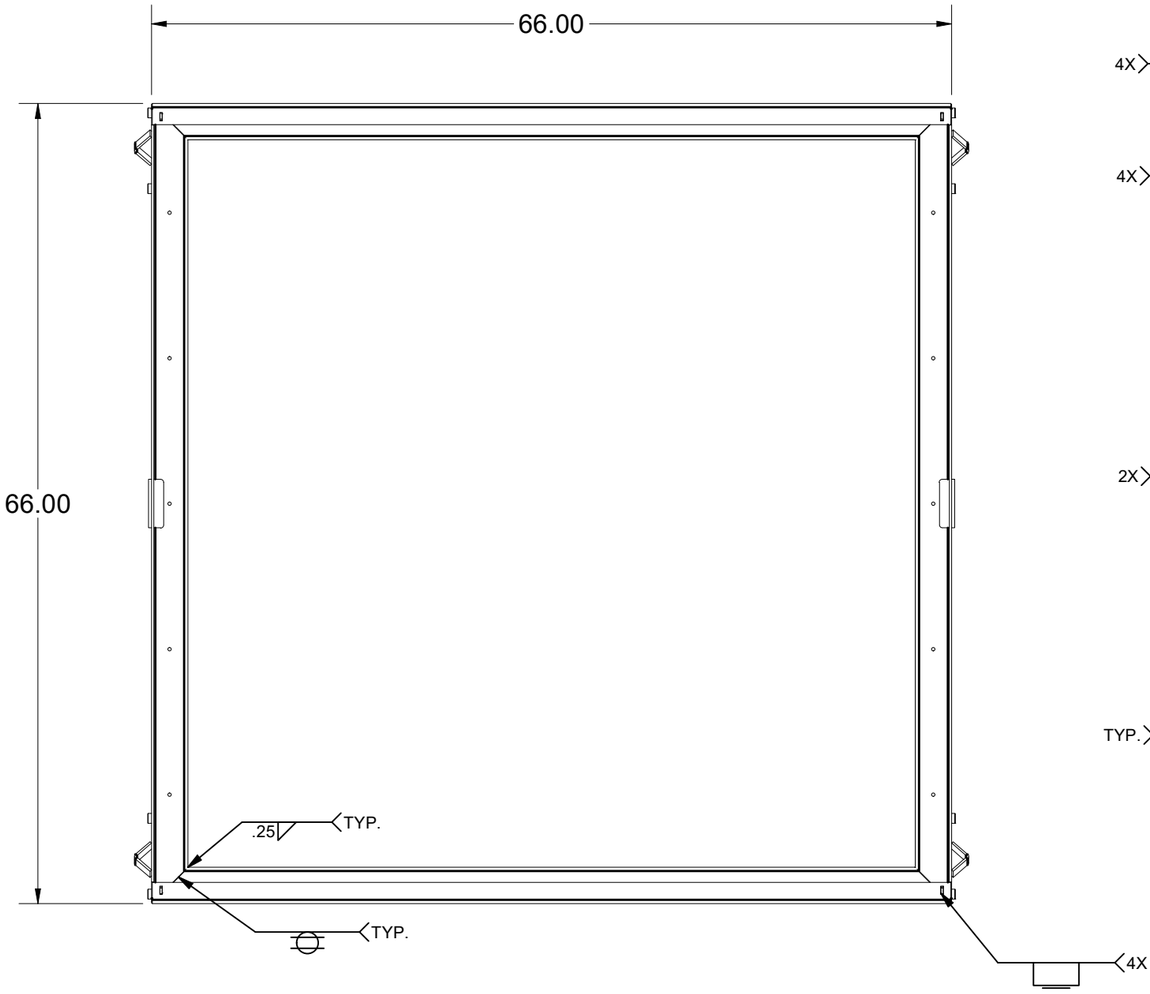


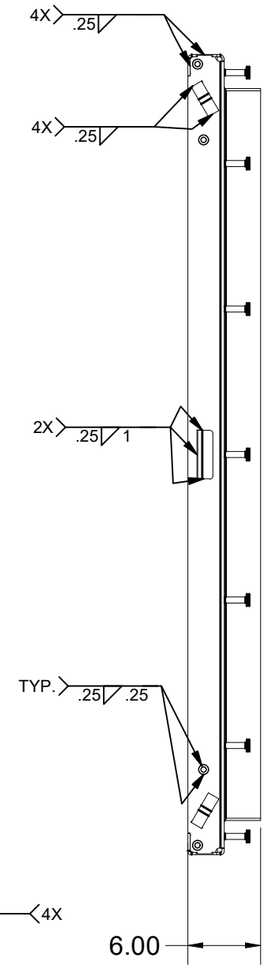


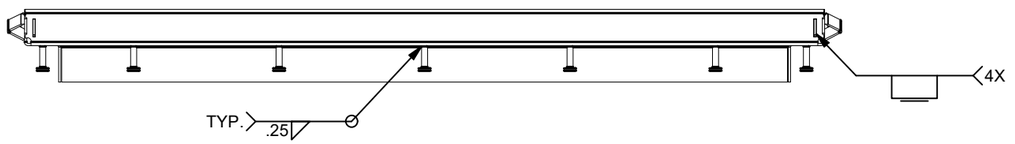


100006605.idw

| | | | |
|---|---|---|---|
| MATERIAL FINISH: Raw | JENSEN METALTECH<br>450 E. GLENDALE AVE. SPARKS. NV 89431<br>775-352-2716 FAX: 755-358-8127<br>*JENSENMETALTECH.COM* | PART NUMBER & DESCRIPTION: 200053439<br>FAS-6060-CH4-R-OH06 | REV: |
| MATERIAL SURFACE: Smooth | | WEIGHT: 140 Lbs<br>DRAWN BY: E.Massey<br>CREATED: 4/17/2018<br>MODIFIED: 6/14/2021 | SHEET: 6 |

©2021 Jensen Precast- All rights reserved. All materials appearing as Jensen Precast documents and the like are proprietary work product and are protected under U.S. copyright and other laws. Unless in conjunction with business conducted with Jensen Precast, any use of Jensen Precast work product without express, written consent is prohibited, and recipient is prohibited from distributing any and all work product to non-approved third parties under penalty of civil action.

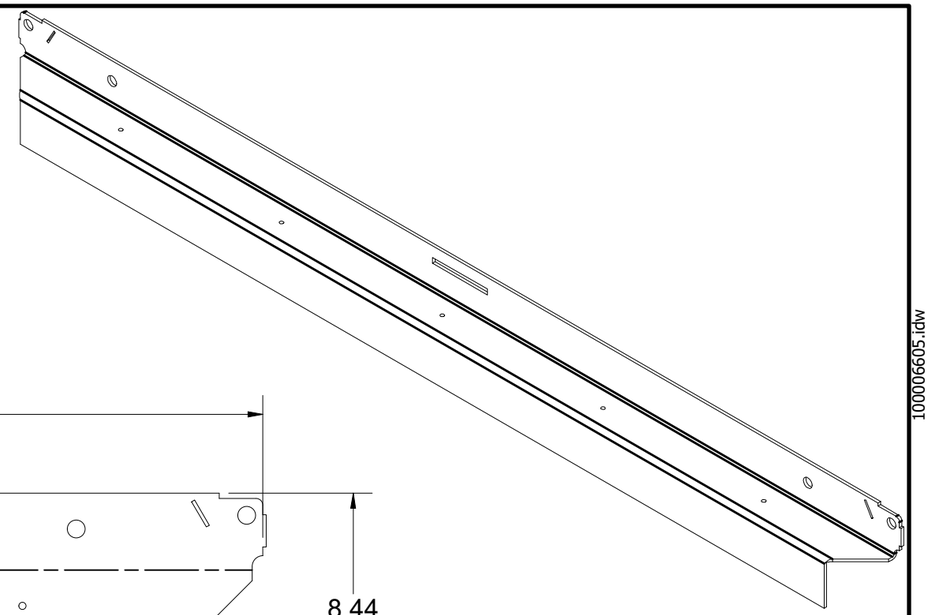

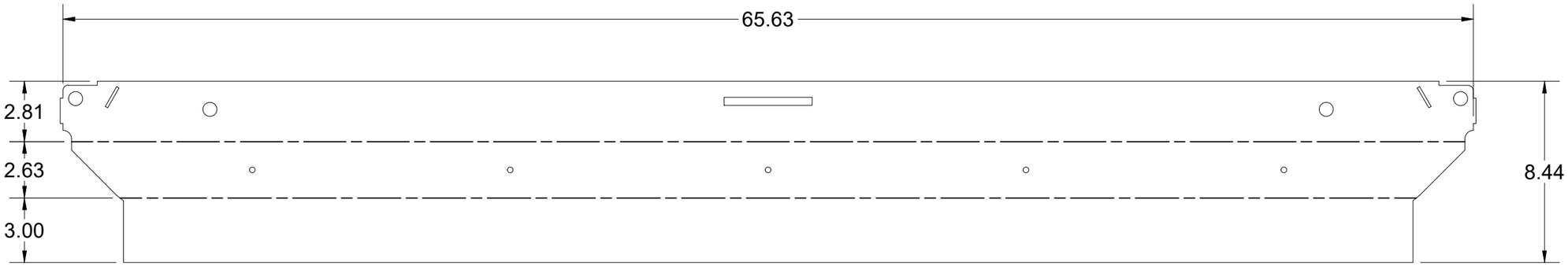


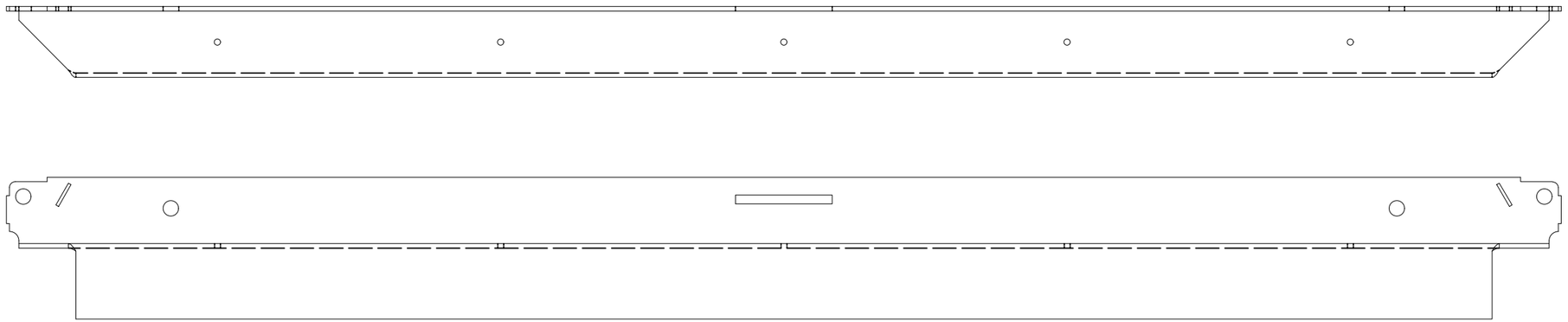

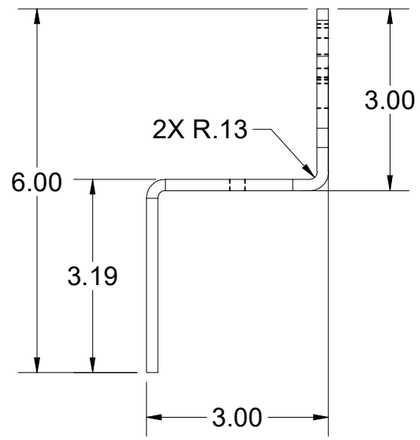


| BEND TABLE | | | |
|---|---|---|---|
| BEND RADIUS | V-OPENING | BEND ANGLE | BEND DEDUCTION |
| 0.125 | 2" | 90 | 0.3750 |

MATERIAL IFS: 100007734

MATERIAL THK: 0.1875

MAT DESCRIPTION: STL ASTM A36 SM-HRPO 60X120 RAW .1875

JENSEN METALTECH
450 E. GLENDALE AVE. SPARKS. NV 89431
775-352-2716 FAX: 755-358-8127
*JENSENMETALTECH.COM*

©2021 Jensen Precast- All rights reserved. All materials appearing as Jensen Precast documents and the like are proprietary work product and are protected under U.S. copyright and other laws. Unless in conjunction with business conducted with Jensen Precast, any use of Jensen Precast work product without express, written consent is prohibited, and recipient is prohibited from distributing any and all work product to non-approved third parties under penalty of civil action.

NAME & DESCRIPTION: 200053441 — Frame Component Steel Frame Side, Cast In

REV: A-1

WEIGHT: 28.586 lbmass

DRAWN BY: E.Massey

CREATED: 5/29/2019

MODIFIED: 6/14/2021

SHEET: 7 OF 14

100006605.idw

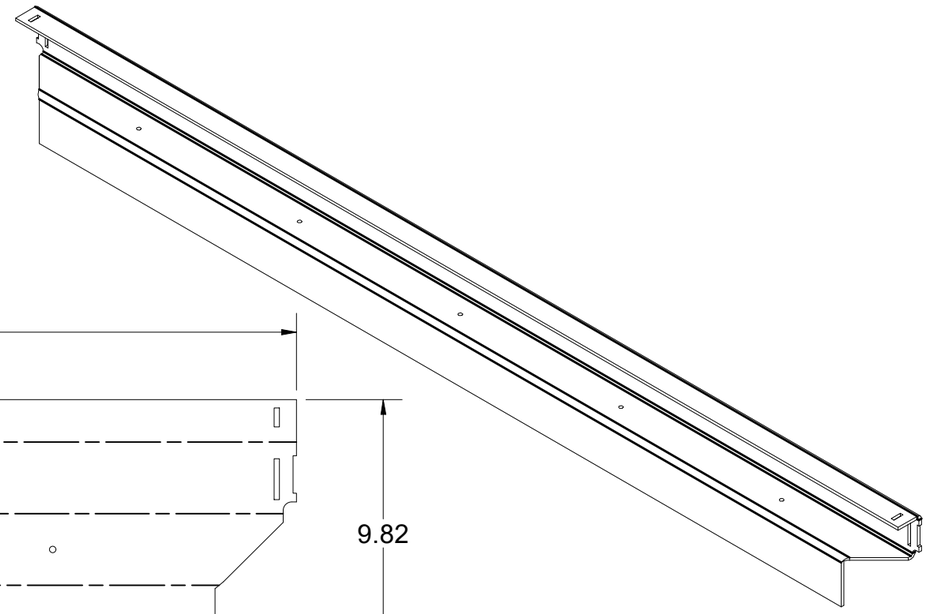

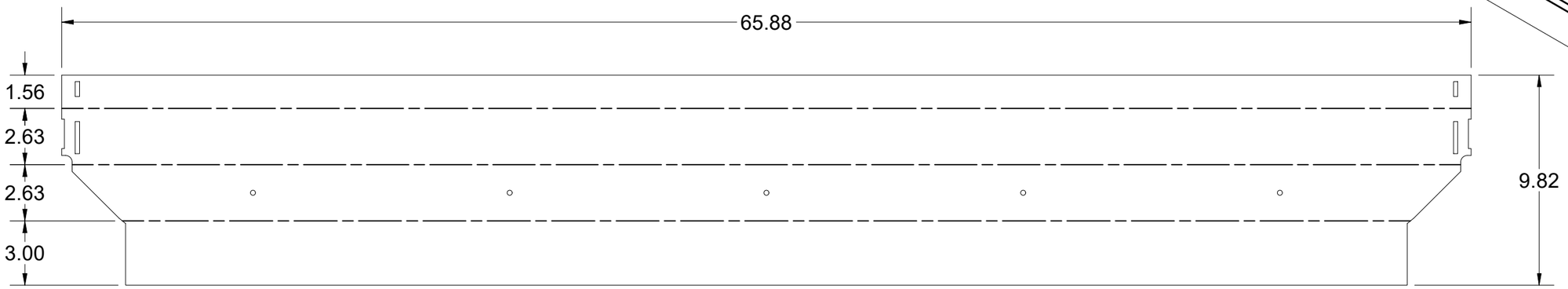


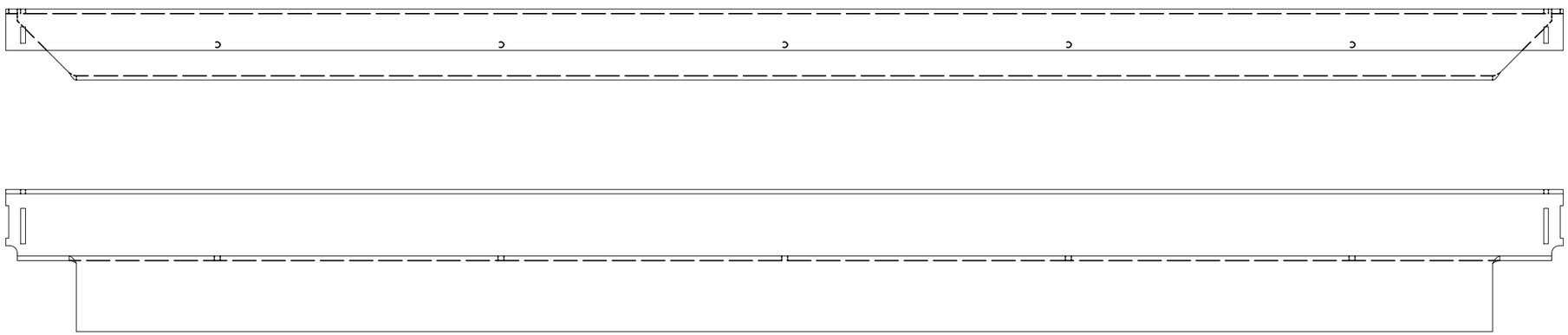

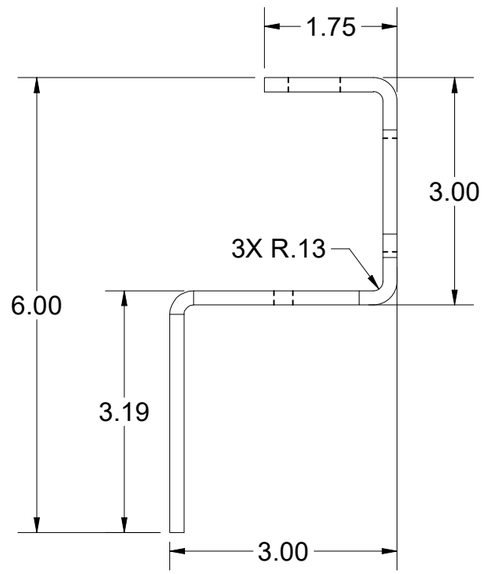


| BEND TABLE | | | |
|---|---|---|---|
| BEND RADIUS | V-OPENING | BEND ANGLE | BEND DEDUCTION |
| 0.125 | 2" | 90 | 0.3750 |

MATERIAL IFS: 100007734

MATERIAL THK: 0.1875

MAT DESCRIPTION: STL ASTM A36 SM-HRPO 60X120 RAW .1875


JENSEN METALTECH

450 E. GLENDALE AVE. SPARKS. NV 89431
775-352-2716 FAX: 755-358-8127
*JENSENMETALTECH.COM*



©2021 Jensen Precast- All rights reserved. All materials appearing as Jensen Precast documents and the like are proprietary work product and are protected under U.S. copyright and other laws. Unless in conjunction with business conducted with Jensen Precast, any use of Jensen Precast work product without express, written consent is prohibited, and recipient is prohibited from distributing any and all work product to non-approved third parties under penalty of civil action.


NAME & DESCRIPTION: 200053440 — Frame Component Steel Frame End, Cast In

REV: A-1

WEIGHT: 33.859 lbmass

DRAWN BY: E.Massey

CREATED: 10/29/2018

MODIFIED: 6/14/2021

SHEET: 8 OF 14

100006605.idw

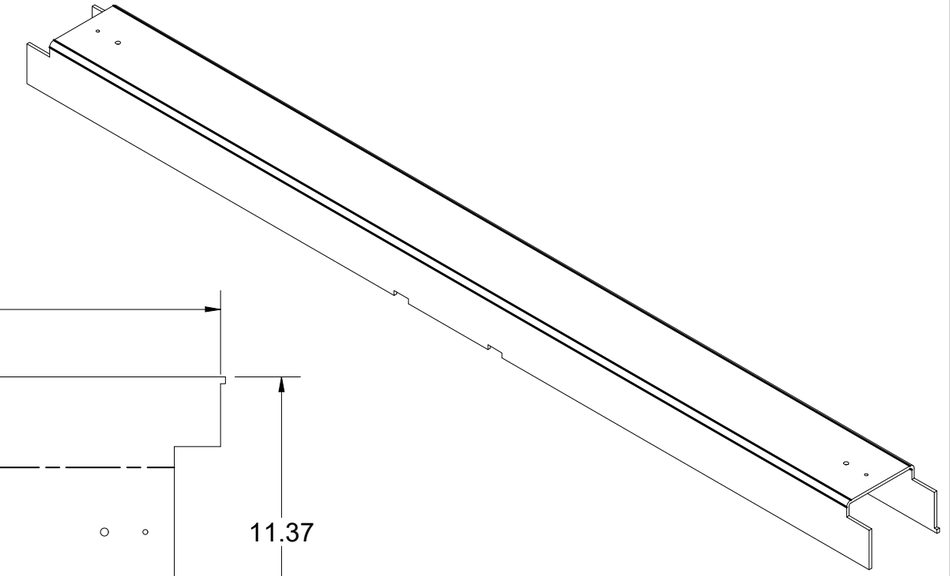

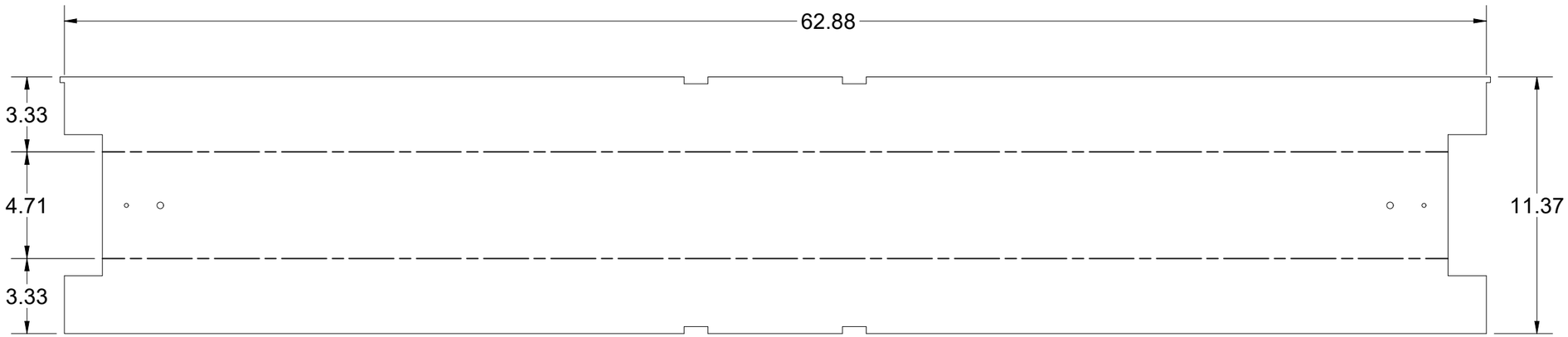


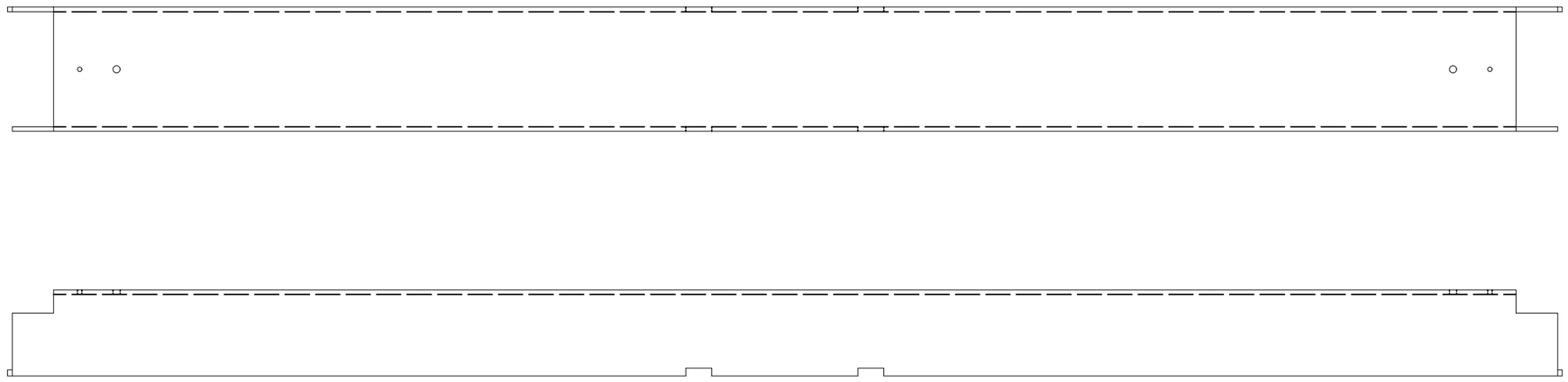

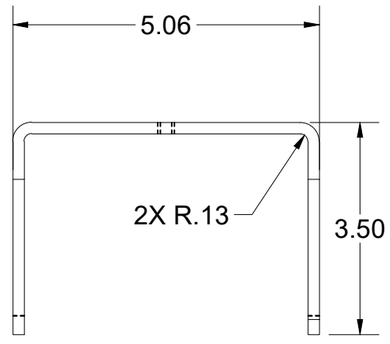


| BEND TABLE | | | |
|---|---|---|---|
| BEND RADIUS | V-OPENING | BEND ANGLE | BEND DEDUCTION |
| 0.125 | 2" | 90 | 0.3450 |

MATERIAL IFS: 100007821

MATERIAL THK: 0.1875

MAT DESCRIPTION: SHT STL GR80 SM-HRPO RAW .1875

JENSEN METALTECH
450 E. GLENDALE AVE. SPARKS. NV 89431
775-352-2716 FAX: 755-358-8127
*JENSENMETALTECH.COM*

©2021 Jensen Precast- All rights reserved.
All materials appearing as Jensen Precast documents and the like are proprietary work product and are protected under U.S. copyright and other laws.
Unless in conjunction with business conducted with Jensen Precast, any use of Jensen Precast work product without express, written consent is prohibited, and recipient is prohibited from distributing any and all work product to non-approved third parties under penalty of civil action.

NAME & DESCRIPTION: 200053433 Door Component Steel Channel

REV: A-1

WEIGHT: 37.208 lbmass

DRAWN BY: E.Massey

CREATED: 11/6/2018

MODIFIED: 6/14/2021

SHEET: 9 OF 14

100006605.idw

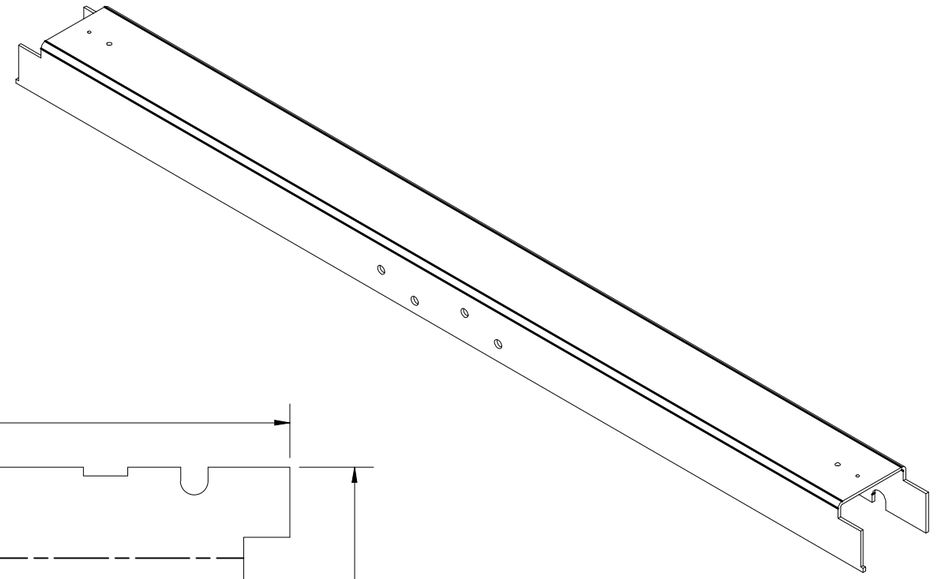

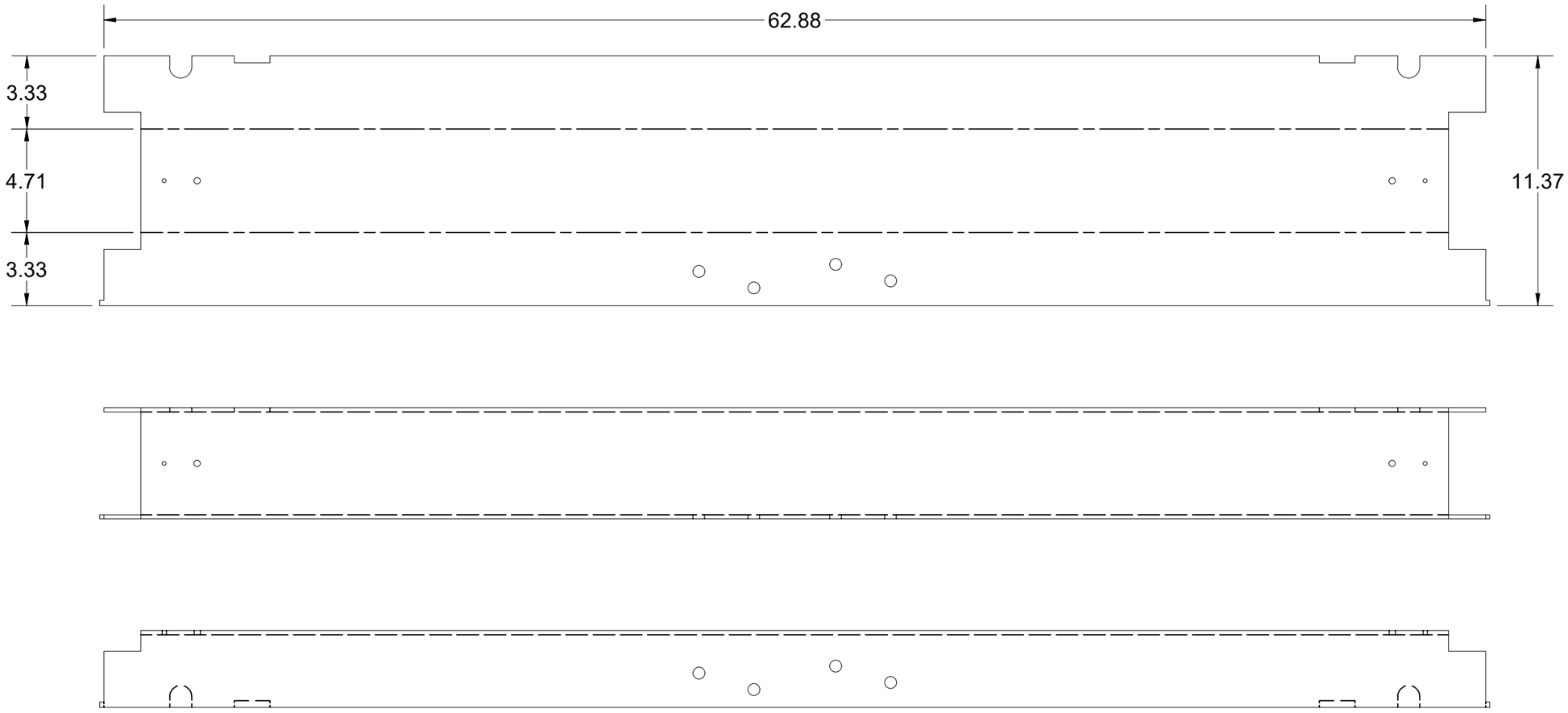


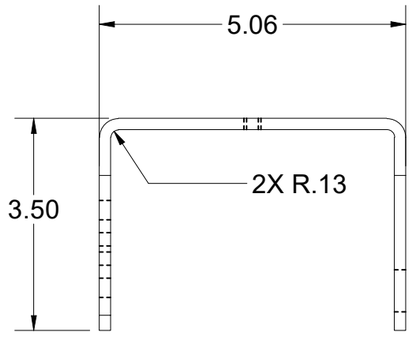


| BEND TABLE | | | | MATERIAL IFS: 100007821 | | | |
|---|---|---|---|---|---|---|---|
| BEND RADIUS | V-OPENING | BEND ANGLE | BEND DEDUCTION | MATERIAL THK: 0.1875 | | | |
| 0.125 | 2" | 90 | 0.3450 | MAT DESCRIPTION: SHT STL GR80 SM-HRPO RAW .1875 | | | |


JENSEN METALTECH
450 E. GLENDALE AVE. SPARKS. NV 89431
775-352-2716 FAX: 755-358-8127
*JENSENMETALTECH.COM*



©2021 Jensen Precast- All rights reserved. All materials appearing as Jensen Precast documents and the like are proprietary work product and are protected under U.S. copyright and other laws. Unless in conjunction with business conducted with Jensen Precast, any use of Jensen Precast work product without express, written consent is prohibited, and recipient is prohibited from distributing any and all work product to non-approved third parties under penalty of civil action.


| NAME & DESCRIPTION: | 200053434<br>Door Component Steel Channel | | REV: A-1 |
|---|---|---|---|
| WEIGHT: 37.083 lbmass | | DRAWN BY: E.Massey | SHEET: 10 OF 14 |
| CREATED: 12/6/2018 | | MODIFIED: 6/14/2021 | |

100006605.idw

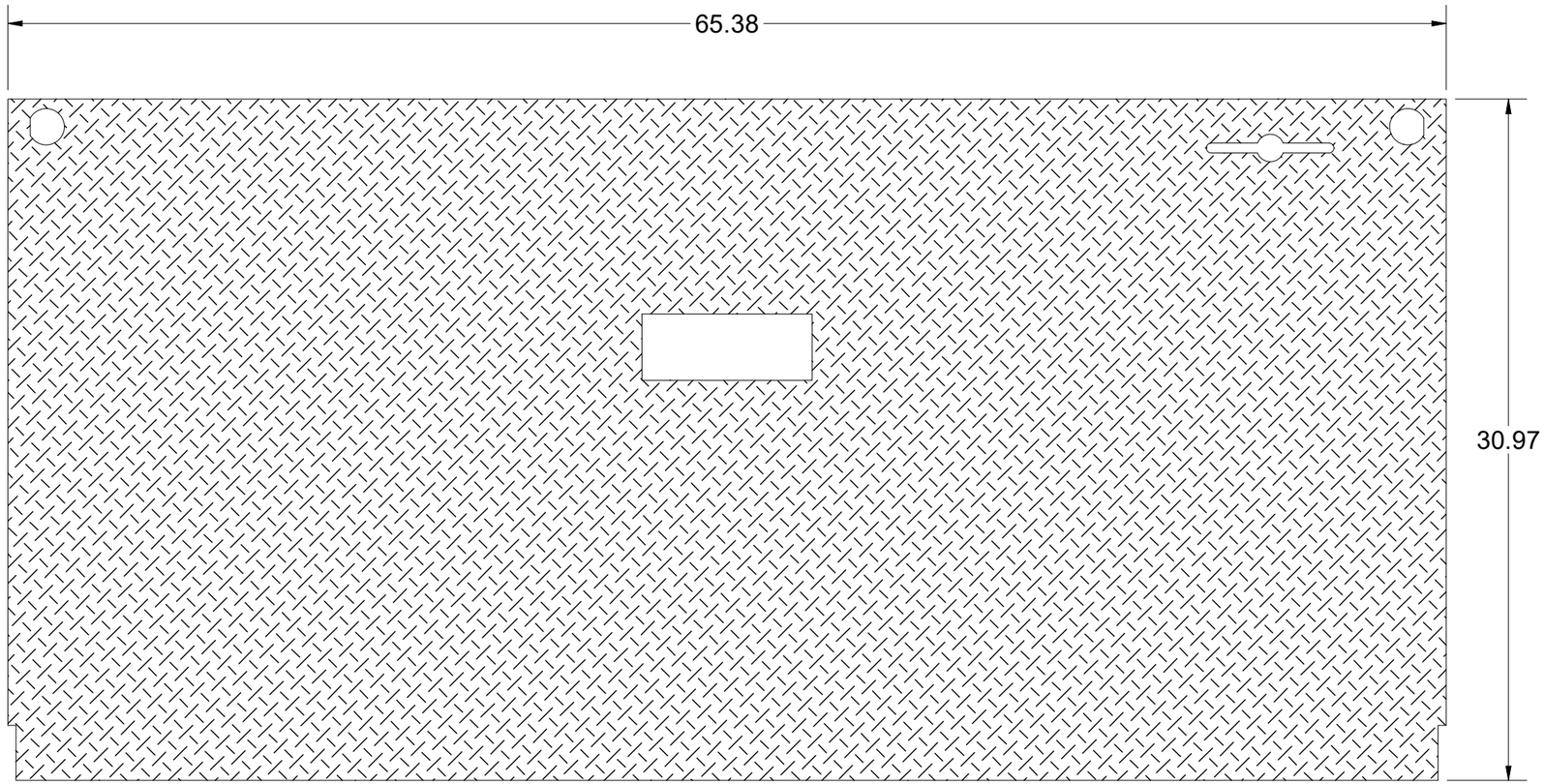


100006605.idw

| BEND TABLE | | | | MATERIAL IFS: 100007736 |
|---|---|---|---|---|
| BEND RADIUS | V-OPENING | BEND ANGLE | BEND DEDUCTION | MATERIAL THK: 0.25 |
| - | - | - | - | MAT DESCRIPTION: SHT STL CQ DP RAW .25 |

JENSEN METALTECH
450 E. GLENDALE AVE. SPARKS. NV 89431
775-352-2716 FAX: 755-358-8127
JENSENMETALTECH.COM

©2021 Jensen Precast- All rights reserved.
All materials appearing as Jensen Precast documents and the like are proprietary work product and are protected under U.S. copyright and other laws.
Unless in conjunction with business conducted with Jensen Precast, any use of Jensen Precast work product without express, written consent is prohibited, and recipient is prohibited from distributing any and all work product to non-approved third parties under penalty of civil action.

| NAME & DESCRIPTION: 200053438 Door Component Steel Plate, Top | | REV: A-1 |
|---|---|---|
| WEIGHT: 155.762 lbmass | DRAWN BY: E.Massey | SHEET: 11 OF 14 |
| CREATED: 12/6/2018 | MODIFIED: 6/14/2021 | |

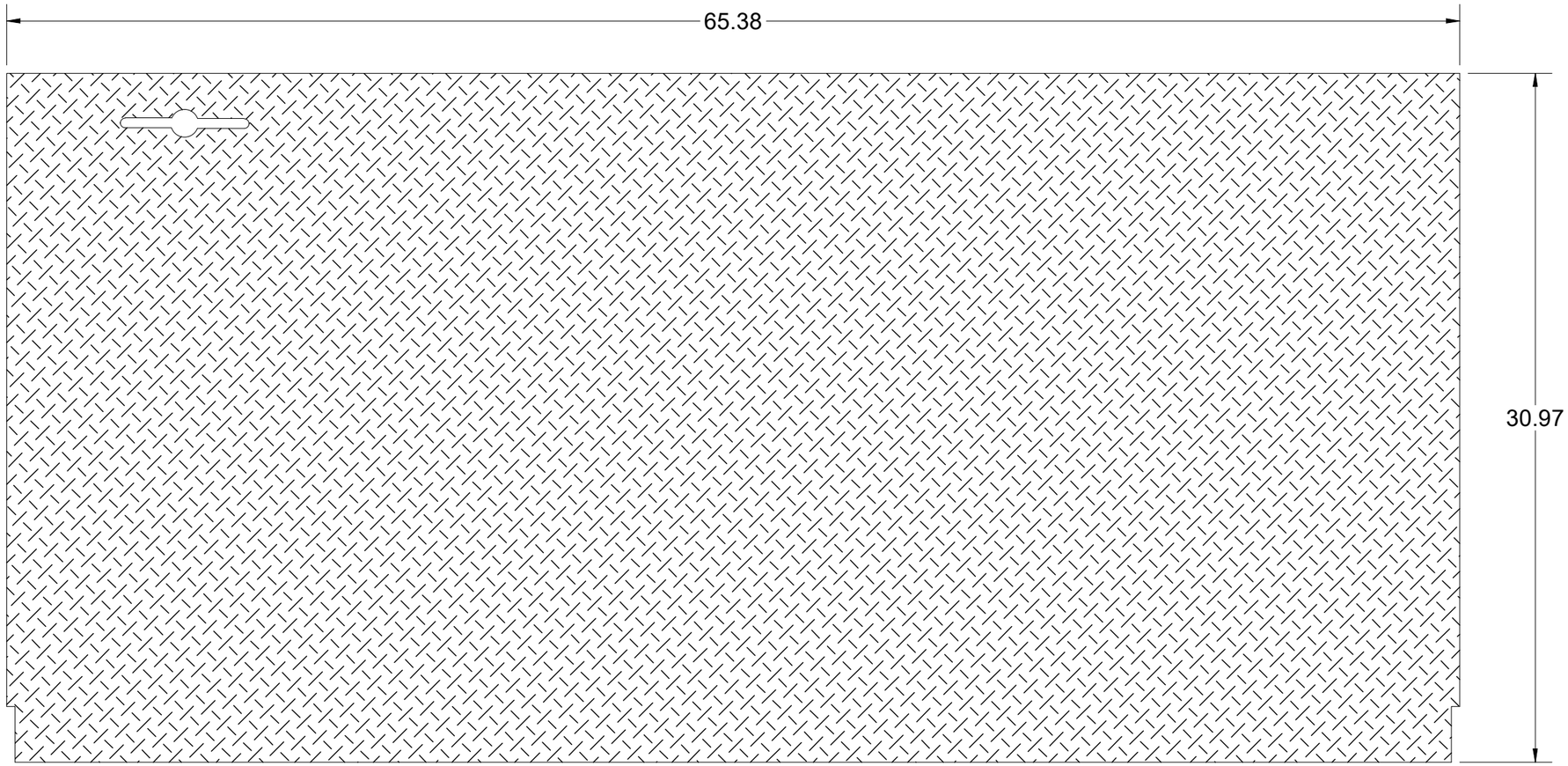


100006605.idw

| BEND TABLE | | | | MATERIAL IFS: 100007736 |
|---|---|---|---|---|
| BEND RADIUS | V-OPENING | BEND ANGLE | BEND DEDUCTION | MATERIAL THK: 0.25 |
| - | - | - | - | MAT DESCRIPTION: SHT STL CQ DP RAW .25 |

JENSEN METALTECH
450 E. GLENDALE AVE. SPARKS. NV 89431
775-352-2716 FAX: 755-358-8127
*JENSENMETALTECH.COM*

©2021 Jensen Precast- All rights reserved. All materials appearing as Jensen Precast documents and the like are proprietary work product and are protected under U.S. copyright and other laws.
Unless in conjunction with business conducted with Jensen Precast, any use of Jensen Precast work product without express, written consent is prohibited, and recipient is prohibited from distributing any and all work product to non-approved third parties under penalty of civil action.

| NAME & DESCRIPTION: | 200053436 Door Component Steel Plate, Bottom | REV: A-1 |
|---|---|---|
| WEIGHT: 157.922 lbmass | DRAWN BY: E.Massey | SHEET: 12 OF 14 |
| CREATED: 12/6/2018 | MODIFIED: 6/14/2021 | |

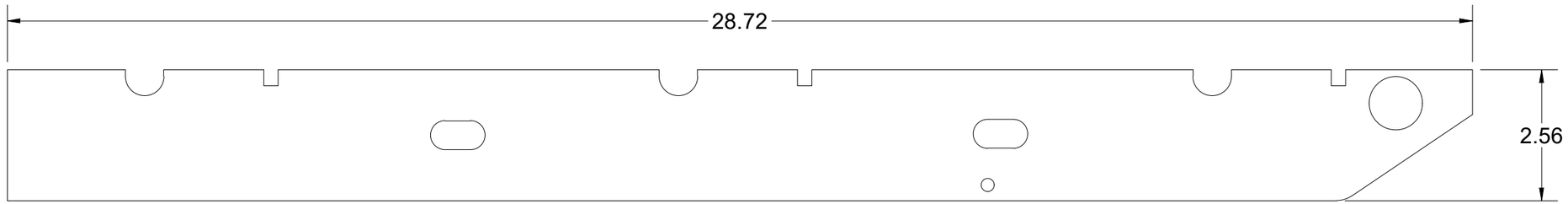


| BEND TABLE | | | | MATERIAL IFS: 100007735 | | | |
|---|---|---|---|---|---|---|---|
| BEND RADIUS | V-OPENING | BEND ANGLE | BEND DEDUCTION | MATERIAL THK: 0.25 | | | |
| - | - | - | - | MAT DESCRIPTION: STL ASTM A36 SM-HRPO RAW .250 | | | |

JENSEN METALTECH
450 E. GLENDALE AVE. SPARKS. NV 89431
775-352-2716 FAX: 755-358-8127
*JENSENMETALTECH.COM*

©2021 Jensen Precast- All rights reserved.
All materials appearing as Jensen Precast documents and the like are proprietary work product and are protected under U.S. copyright and other laws.
Unless in conjunction with business conducted with Jensen Precast, any use of Jensen Precast work product without express, written consent is prohibited, and recipient is prohibited from distributing any and all work product to non-approved third parties under penalty of civil action.

| NAME & DESCRIPTION: | 200053435<br>Door Component Steel Side Bar | | REV: A-1 |
|---|---|---|---|
| WEIGHT: 4.846 lbmass | DRAWN BY: E.Massey | | SHEET: 13 OF 14 |
| CREATED: 12/6/2018 | MODIFIED: 6/14/2021 | | |

100006605.idw

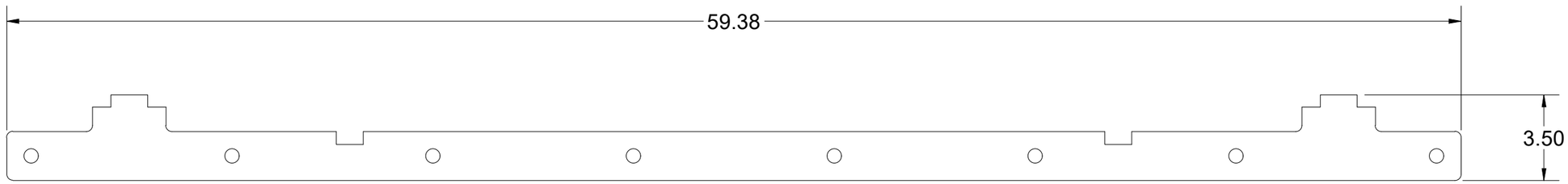


| BEND TABLE | | | | MATERIAL IFS: 100007735 |
|---|---|---|---|---|
| BEND RADIUS | V-OPENING | BEND ANGLE | BEND DEDUCTION | MATERIAL THK: 0.25 |
| - | - | - | - | MAT DESCRIPTION: STL ASTM A36 SM-HRPO RAW .250 |

JENSEN METALTECH
450 E. GLENDALE AVE. SPARKS. NV 89431
775-352-2716 FAX: 755-358-8127
*JENSENMETALTECH.COM*

©2021 Jensen Precast- All rights reserved.
All materials appearing as Jensen Precast documents and the like are proprietary work product and are protected under U.S. copyright and other laws.
Unless in conjunction with business conducted with Jensen Precast, any use of Jensen Precast work product without express, written consent is prohibited, and recipient is prohibited from distributing any and all work product to non-approved third parties under penalty of civil action.

| NAME & DESCRIPTION: | | REV: |
|---|---|---|
| 200020976<br>Door Component Steel Lap Bar 60in | | A |
| WEIGHT: N/A | DRAWN BY: E.Massey | SHEET: 14 OF 14 |
| CREATED: 5/17/2021 | MODIFIED: 6/14/2021 | |

100006605.idw