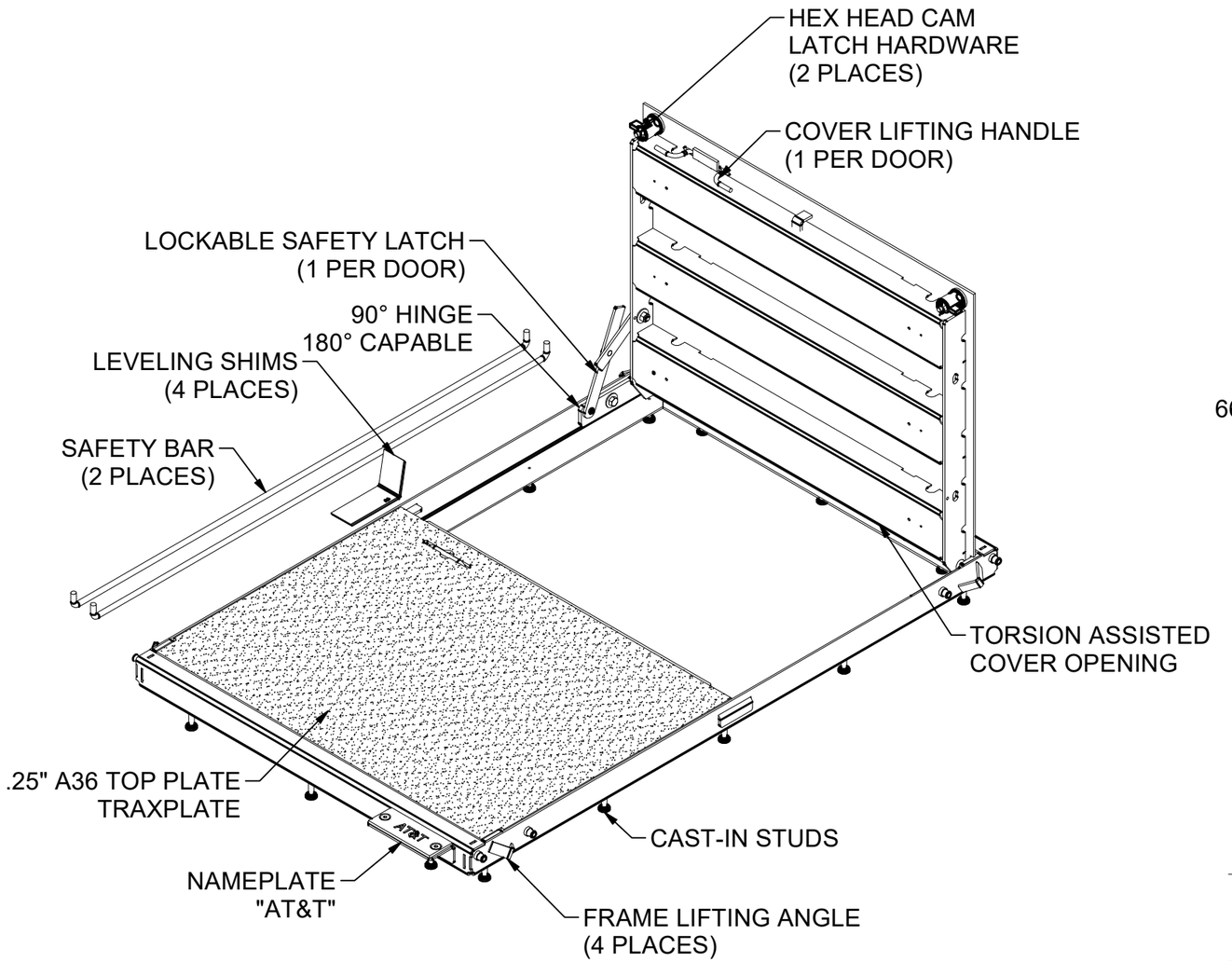

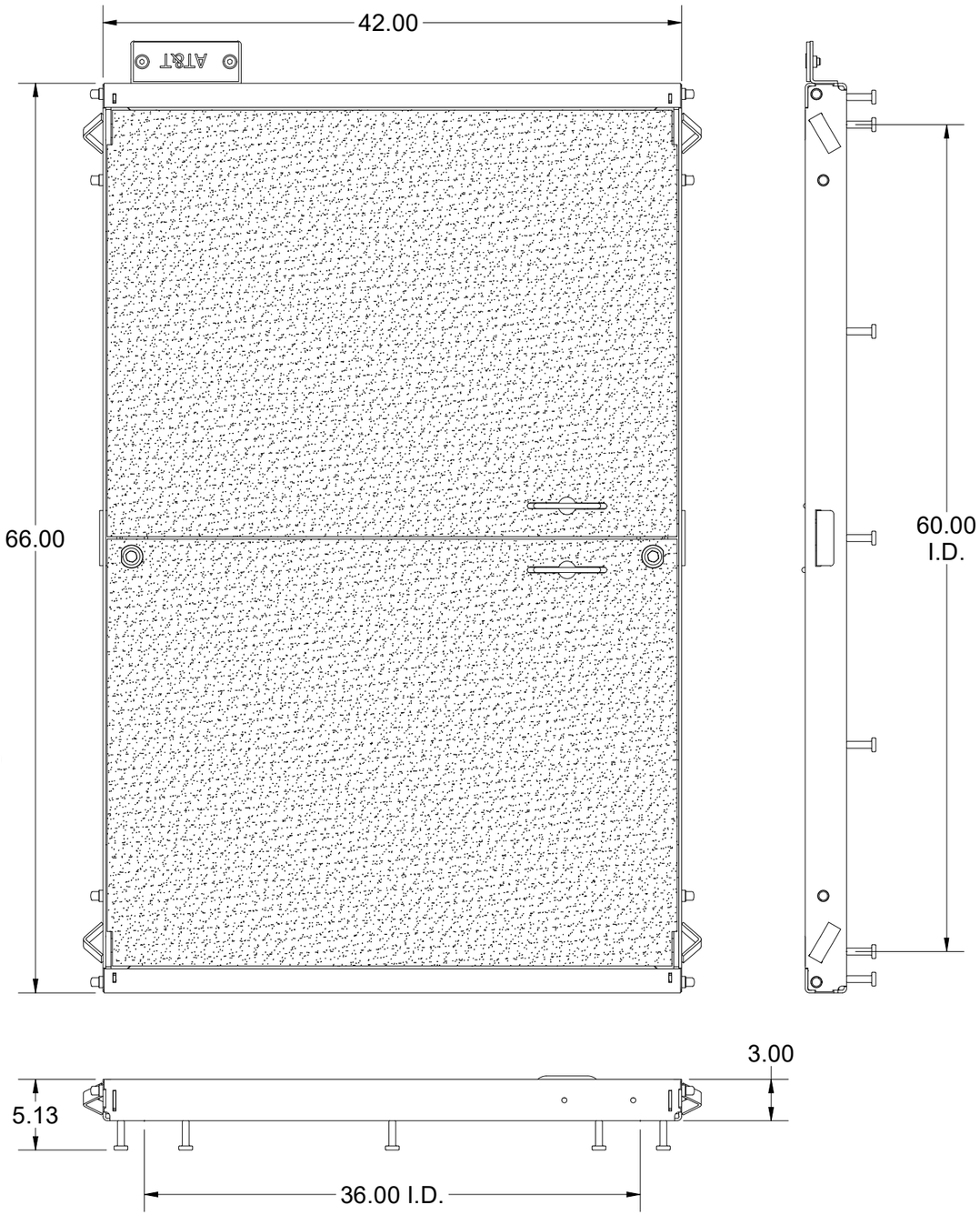

100006598.idw

ASTM C1802: Level 04

16,000 lb load on 10" x 20" footprint, without impact restricted to parking spaces and areas within close proximity of roadways.

SURFACE:	TraxPlate™	FINISH:	Painted
WEIGHT:	390.22 lbs	MARKING:	As Noted

JENSEN METALTECH
450 E. GLENDALE AVE. SPARKS. NV 89431
775-352-2716 FAX: 755-358-8127
JENSENMETALTECH.COM

©2019 Jensen Precast- All rights reserved. All materials appearing as Jensen Precast documents and the like are proprietary work product and are protected under U.S. copyright and other laws. Unless in conjunction with business conducted with Jensen Precast, any use of Jensen Precast work product without express, written consent is prohibited, and recipient is prohibited from distributing any and all work product to non-approved third parties under penalty of civil action.

DESCRIPTION: CAS2-3660-CH4-TRX-P-GREY-FONT-ATT-OH03

36x60 Cover Assembly (ASTM Load Level 04, 2 Door, Steel, Hinged, TraxPlate™, Painted GREY, , AT&T) OH 03

PART NUMBER:	100006597	DRAWN BY:	E. Massey
CREATED:	5/1/2018	MODIFIED:	10/8/2020

REV:

SHEET: 1

BILL OF MATERIALS

ITEM	UNIT QTY	QTY	PART NUMBER	DESCRIPTION
1	1	1	200044665	DAS2-B-3660-H4-TRX-R-FONT-ATT
2	1	1	200044670	DAS2-T-3660-H4-TRX-R-FONT-ATT
3	1	1	200044662	FAS-3660-CH4-R-FONT-ATT-OH03
4	1	4	100003823	BOLT HEX 1/2-13 UNC 1.5 ZINC
5	1	2	100011407	BOLT HEX 1/2-13 UNC 2.5 ZINC
6	1	2	100007733	BOLT HEX SOCKET FLAT COUNTERSUNK HEAD 1/2-13 UNC 1 GR 5 ZINC-PLATED
7	1	4	100007869	BOLT SHCS 1/2-13 X 1-3/4 SS
8	1	4	100007873	BOLT SHCS 3/8-16 X 1-1/4 PLATED
9	1	2	100007876	BOLT SHOULDER 3/8 X 1/2 WITH 5/16-18 THREADS GR 5 PLATED
10	1	8	100007939	CAP VINYL .467 X 1/2
11	1	2	100007918	COTTER PIN 0.094DIA X 1-1/4
12	1	2	100007492	HEX NUT NYLOCK 1/2-13 GR-5 ZINC-PLATED
13	1	2	100007729	HEX NUT SLOTTED CASTLE HEAD 1/2-13 SS
14	1	2	100007660	HINGE ASSY STL RIGHT .50
15	1	2	100007659	HINGE ASSY STL LEFT .50
16	1	2	100007924	LANYARD 3/64 W/PIN COATED SS
17	1	4	100005056	LEVELING BOLT 9.5 SHIM PLATE
18	1	1	100007966	NAME PLATE CAST ALUM - AT&T
19	1	2	100007857	NUT FINGER 1/2-13 BRASS
20	1	2	100007692	REDUCED POWER SPRING MOUNT .50
21	1	2	100007882	RIVET GRIP STEEL 3/16 X 7/16 LRG HD
22	1	4	100007859	RIVET NUT 3/8-16 FLAT KNURLED
23	1	2	100007707	SAFETY BAR CAS2-3660 HNG
24	1	2	100007933	SAFETY LATCH ASSY FOR UNI AND 90 D HINGE
25	1	2	100007915	SPRING COMPRESSION 055 X 5/8 X 7/8 LONG
26	1	2	100007727	TORSION HEX ROD 1/2 X 36 RAW
27	1	8	100011418	WASHER FLAT 1/2 X 1 3/8 USS TYPE A ZINC

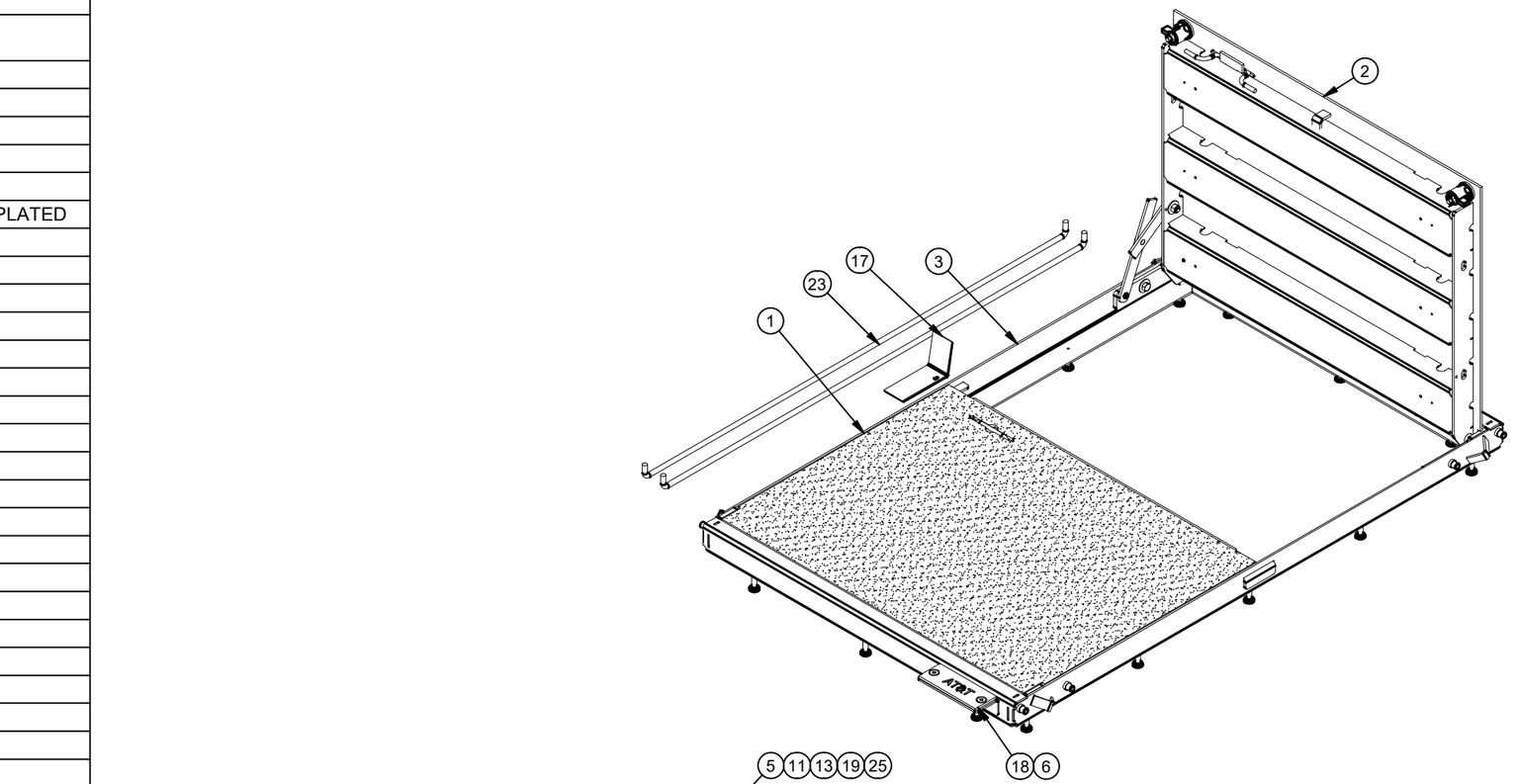

100006598.idw

MATERIAL FINISH: Painted	JENSEN METALTECH 450 E. GLENDALE AVE. SPARKS. NV 89431 775-352-2716 FAX: 755-358-8127 *JENSENMETALTECH.COM*	©2020 Jensen Precast- All rights reserved. All materials appearing as Jensen Precast documents and the like are proprietary work product and are protected under U.S. copyright and other laws. Unless in conjunction with business conducted with Jensen Precast, any use of Jensen Precast work product without express, written consent is prohibited, and recipient is prohibited from distributing any and all work product to non-approved third parties under penalty of civil action.	PART NUMBER & DESCRIPTION: 100006597 CAS2-3660-CH4-TRX-P-GREY-FONT-ATT-OH03
MATERIAL SURFACE: TraxPlate™			WEIGHT: 390.22 Lbs DRAWN BY: E. Massey CREATED: 5/1/2018 MODIFIED: 10/8/2020

REV:

SHEET: 2

BURN LIST - BOM

ITEM QTY	PART NUMBER	DESCRIPTION	STOCK NUMBER	MATERIAL	MASS
2	200044663	Frame Component Steel Frame End, Cast In	100007734	STL ASTM A36 SM-HRPO 60X120 RAW .1875	15.413 lbmass
2	200044664	Frame Component Steel Frame Side, Cast In	100007734	STL ASTM A36 SM-HRPO 60X120 RAW .1875	19.320 lbmass
6	200044666	Door Component Steel Channel	100007840	SHT STL GR80 GA-11 SM-HR RAW .1196	12.976 lbmass
1	200044667	Door Component Steel Plate, Bottom	100007735	STL ASTM A36 SM-HRPO RAW .250	90.611 lbmass
4	200044668	Door Component Steel Side Bar	100007735	STL ASTM A36 SM-HRPO RAW .250	4.813 lbmass
1	200044669	Door Component Steel Lap Bar	100007735	STL ASTM A36 SM-HRPO RAW .250	5.387 lbmass
1	200044671	Door Component Steel Plate, Top	100007735	STL ASTM A36 SM-HRPO RAW .250	90.311 lbmass

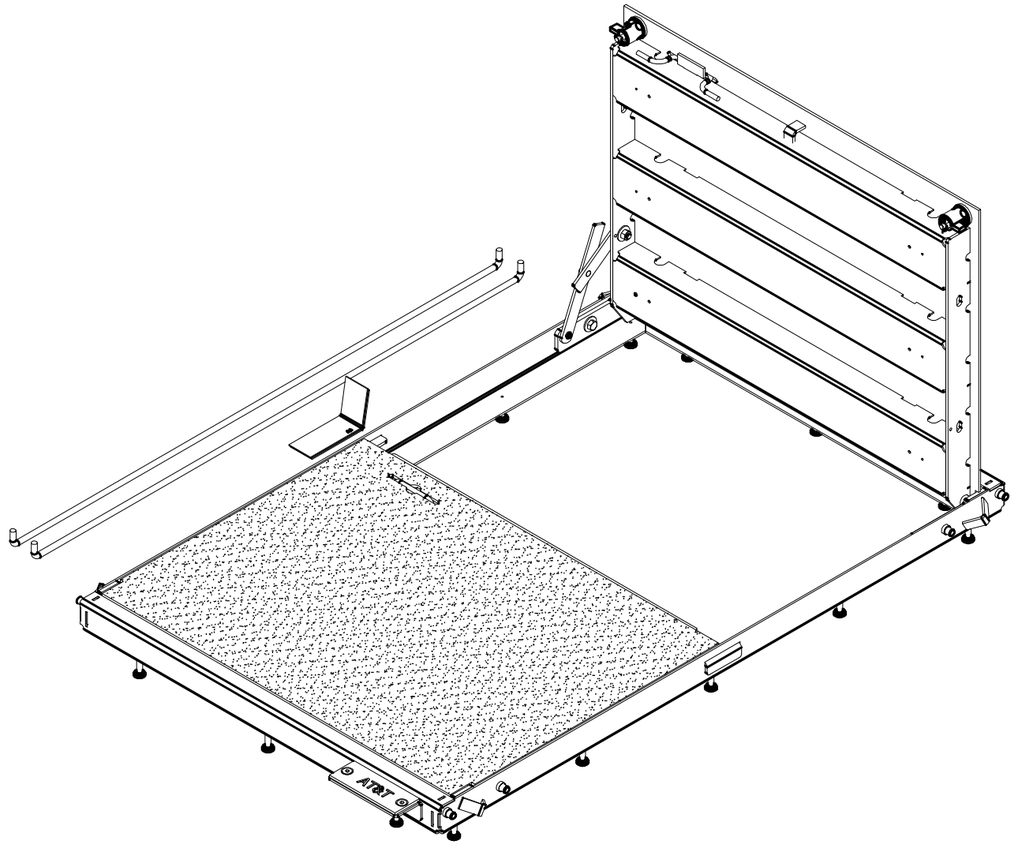

100006598.idw

MATERIAL FINISH: Painted

MATERIAL SURFACE: TraxPlate™

JENSEN METALTECH
450 E. GLENDALE AVE. SPARKS. NV 89431
775-352-2716 FAX: 755-358-8127
JENSENMETALTECH.COM

©2020 Jensen Precast- All rights reserved.
All materials appearing as Jensen Precast documents and the like are proprietary work product and are protected under U.S. copyright and other laws.
Unless in conjunction with business conducted with Jensen Precast, any use of Jensen Precast work product without express, written consent is prohibited, and recipient is prohibited from distributing any and all work product to non-approved third parties under penalty of civil action.

PART NUMBER & DESCRIPTION: 100006597 CAS2-3660-CH4-TRX-P-GREY-FONT-ATT-OH03

REV:

WEIGHT: 390.22 Lbs

DRAWN BY: E. Massey

CREATED: 5/1/2018

MODIFIED: 10/8/2020

SHEET: 3

BILL OF MATERIALS

ITEM	UNIT QTY	QTY	PART NUMBER	DESCRIPTION
1	1	2	100007970	CAM TOWER CAST STEEL
2	1	3	200044666	Door Component Steel Channel
3	1	1	200044671	Door Component Steel Plate, Top
4	1	2	200044668	Door Component Steel Side Bar
5	1	1	100007646	HANDLE RETAINER STL
6	1	1	100007644	LEAF PULL HANDLE A36 3/8IN DIAMETER
7	1	1	100007647	LIFTING BRACKET STEEL LEAF

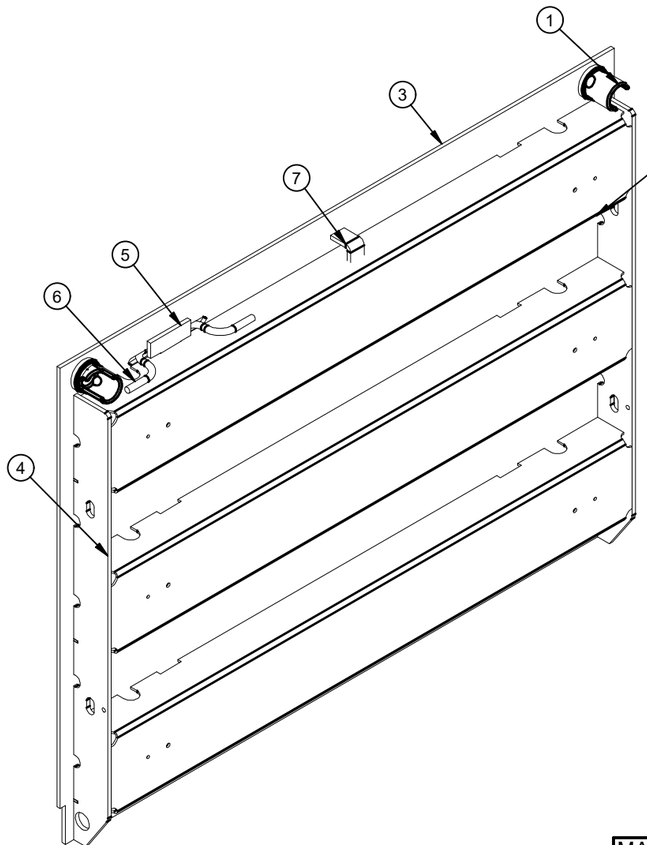

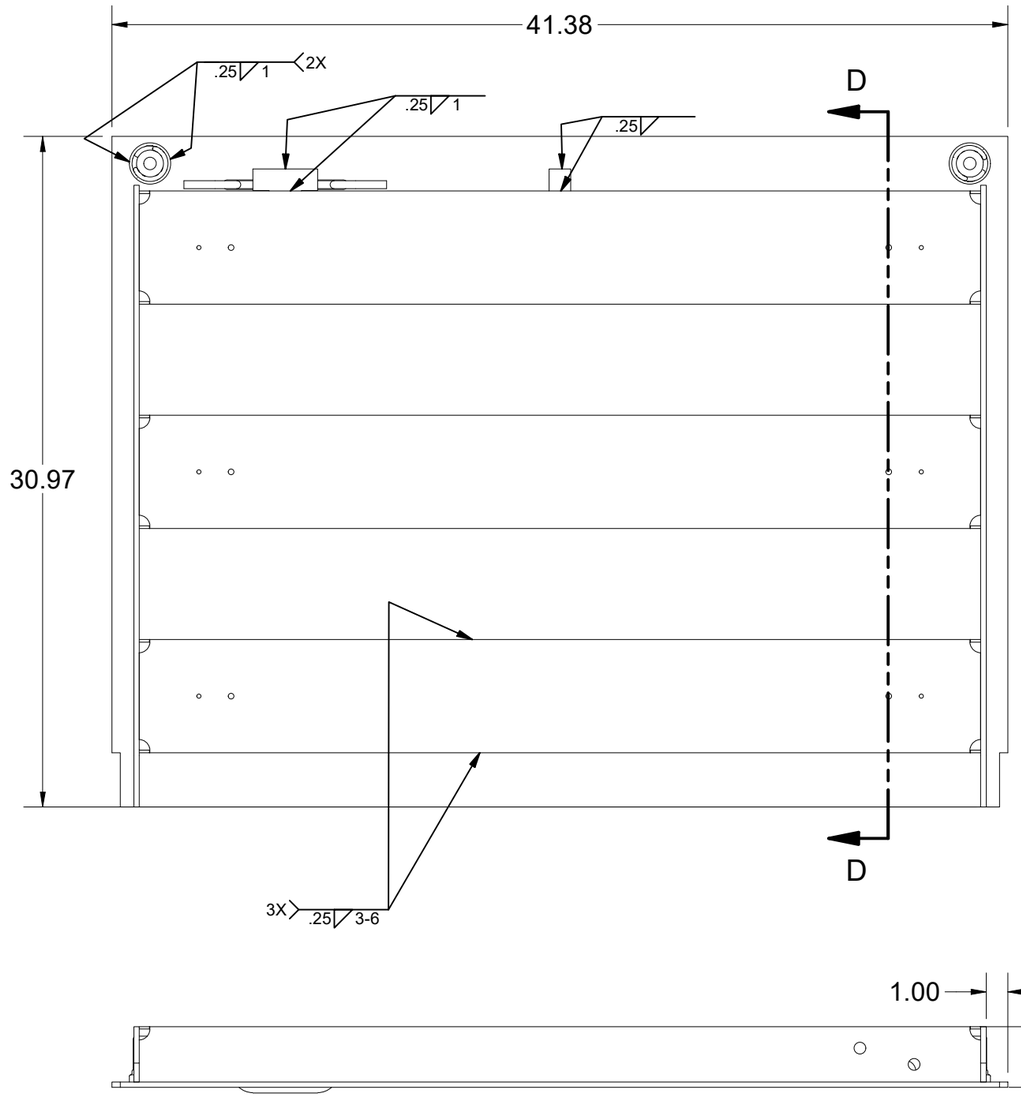

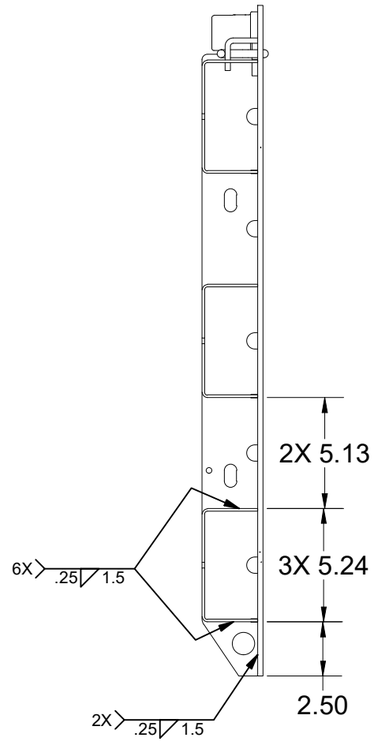

SECTION D-D

100006598.idw

MATERIAL FINISH: Raw	JENSEN METALTECH 450 E. GLENDALE AVE. SPARKS. NV 89431 775-352-2716 FAX: 755-358-8127 *JENSENMETALTECH.COM*	©2020 Jensen Precast- All rights reserved. All materials appearing as Jensen Precast documents and the like are proprietary work product and are protected under U.S. copyright and other laws. Unless in conjunction with business conducted with Jensen Precast, any use of Jensen Precast work product without express, written consent is prohibited, and recipient is prohibited from distributing any and all work product to non-approved third parties under penalty of civil action.	PART NUMBER & DESCRIPTION: 200044670 DAS2-T-3660-H4-TRX-R-FONT-ATT — REV: A-1
MATERIAL SURFACE: TraxPlate™			WEIGHT: 140.62 Lbs — DRAWN BY: E. Massey — SHEET: 4
			CREATED: 4/23/2018 — MODIFIED: 10/8/2020

BILL OF MATERIALS

ITEM	UNIT QTY	QTY	PART NUMBER	DESCRIPTION
1	1	3	200044666	Door Component Steel Channel
2	1	1	200044669	Door Component Steel Lap Bar
3	1	1	200044667	Door Component Steel Plate, Bottom
4	1	2	200044668	Door Component Steel Side Bar
5	1	1	100007644	LEAF PULL HANDLE A36 3/8IN DIAMETER
6	1	1	100007647	LIFTING BRACKET STEEL LEAF

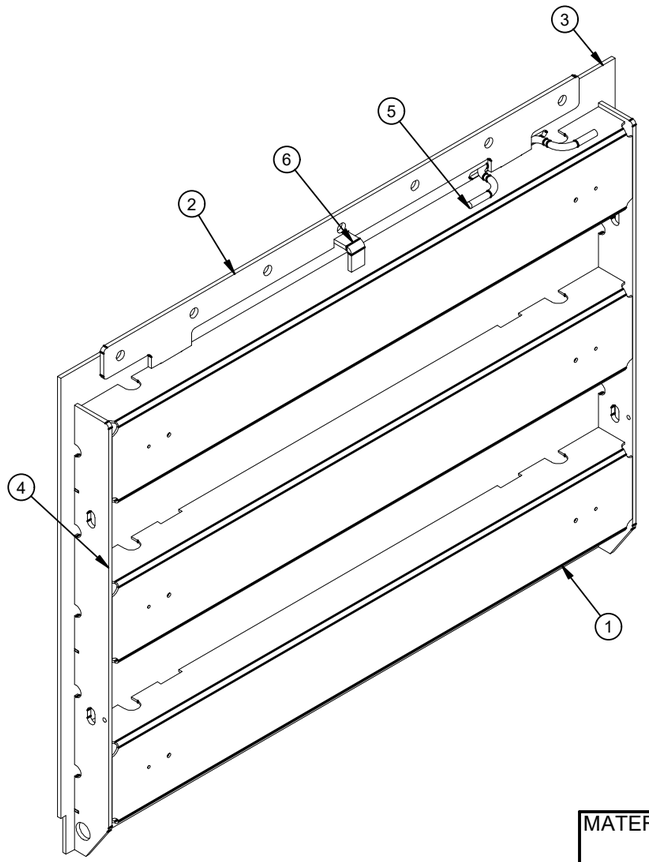

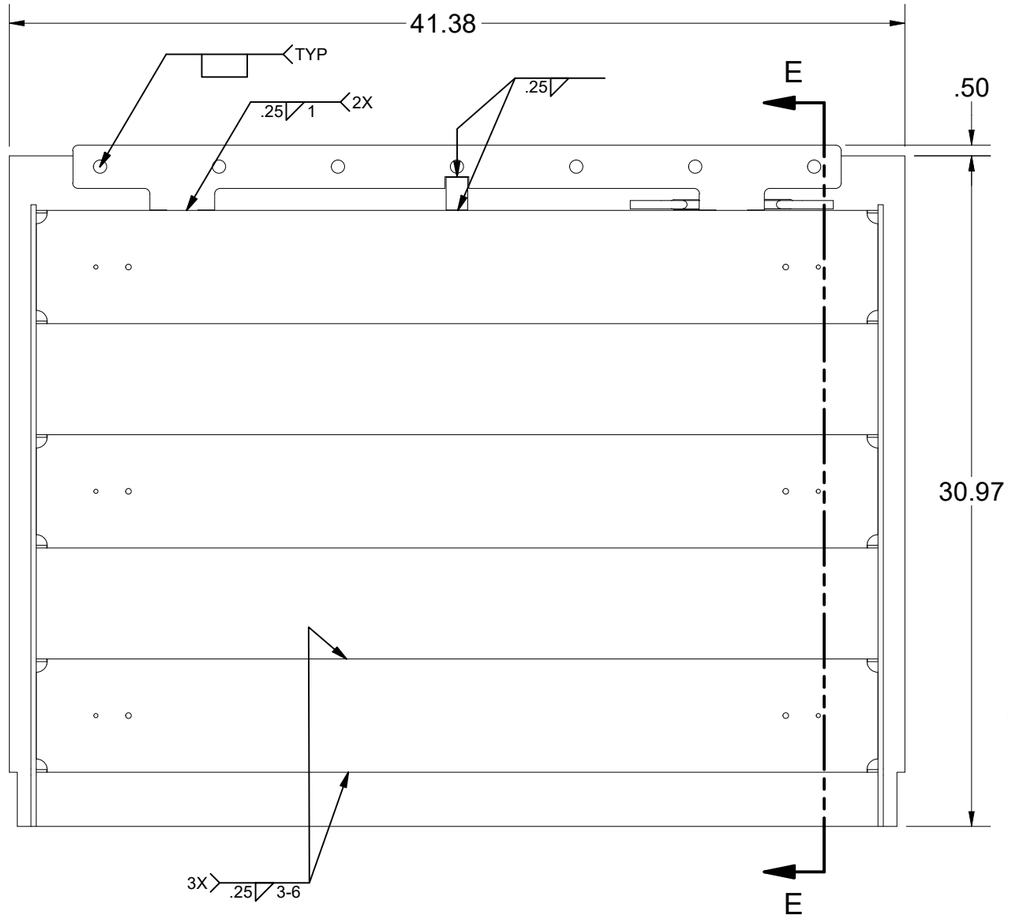

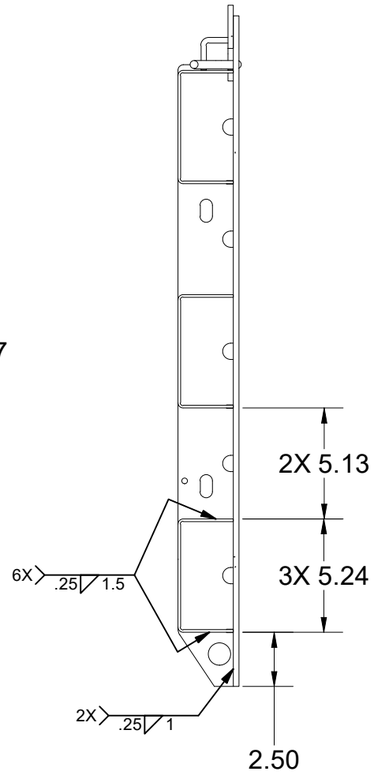

SECTION E-E

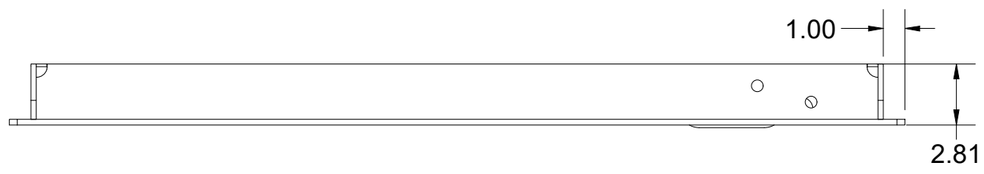

MATERIAL FINISH: Raw	JENSEN METALTECH 450 E. GLENDALE AVE. SPARKS. NV 89431 775-352-2716 FAX: 755-358-8127 *JENSENMETALTECH.COM*	©2020 Jensen Precast- All rights reserved. All materials appearing as Jensen Precast documents and the like are proprietary work product and are protected under U.S. copyright and other laws. Unless in conjunction with business conducted with Jensen Precast, any use of Jensen Precast work product without express, written consent is prohibited, and recipient is prohibited from distributing any and all work product to non-approved third parties under penalty of civil action.	PART NUMBER & DESCRIPTION: 200044665 DAS2-B-3660-H4-TRX-R-FONT-ATT — REV: A-1
MATERIAL SURFACE: TraxPlate™			WEIGHT: 144.79 Lbs — DRAWN BY: E. Massey — SHEET: 5
			CREATED: 4/23/2018 — MODIFIED: 10/8/2020

100006598.idw

BILL OF MATERIALS

ITEM	UNIT QTY	QTY	PART NUMBER	DESCRIPTION
1	1	4	200018691	FRAME BOLT DOUBLER SLOT
2	1	2	100007636	FRAME LATCH ANGLE - A36 - 4IN LONG
3	1	4	100007641	FRAME LIFTING BRACKET
4	1	2	200044663	Frame Component Steel Frame End, Cast In
5	1	2	200044664	Frame Component Steel Frame Side, Cast In
6	1	1	100007667	NAME PLATE FRAME ANGLE
7	1	10	100007728	NUT SELF-CLINCH 1/2-13 S-0813-1 RAW
8	1	16	100007889	STUD NELSON WELD H4L-HEADED A36 1/2X2-1/8

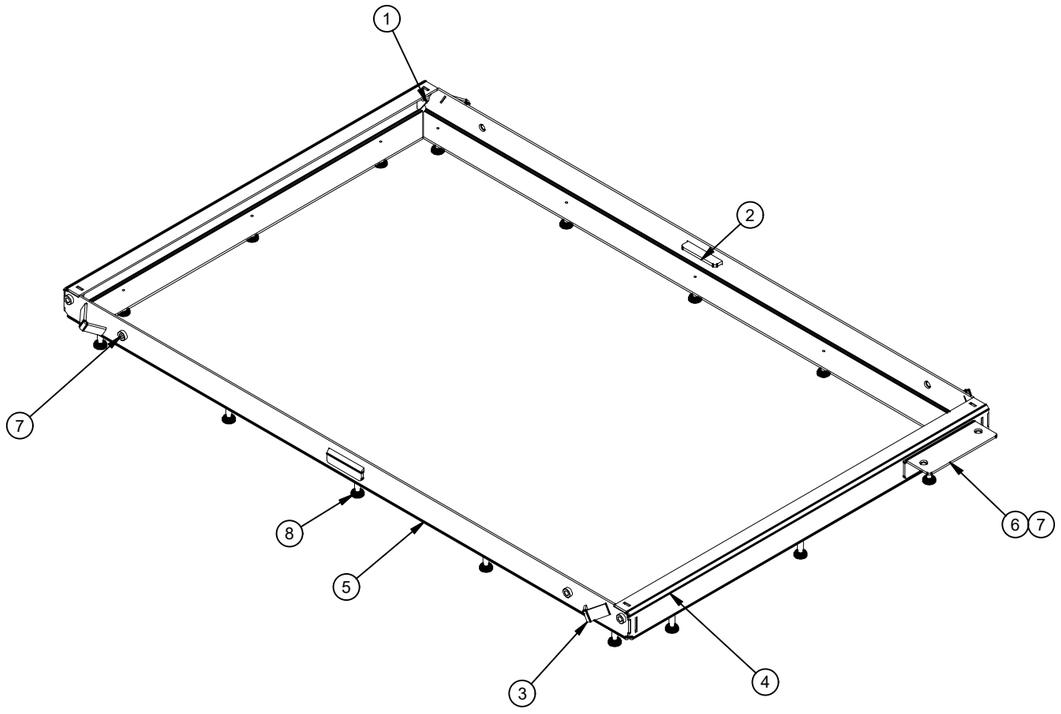

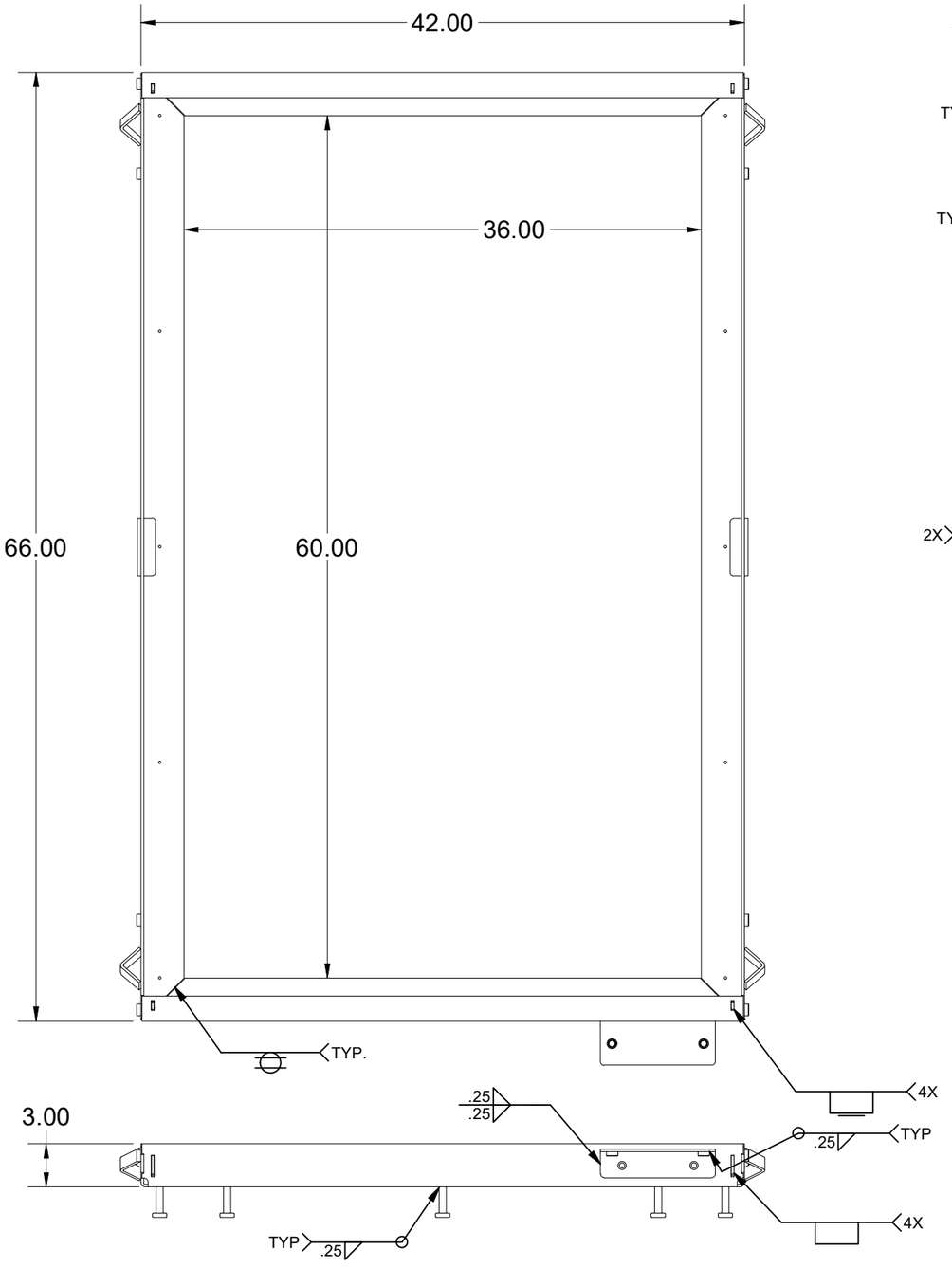

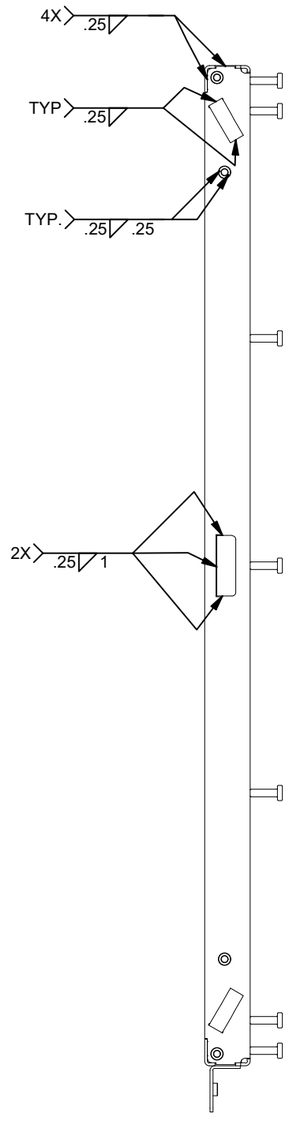

100006598.idw

MATERIAL FINISH: Raw	JENSEN METALTECH 450 E. GLENDALE AVE. SPARKS. NV 89431 775-352-2716 FAX: 755-358-8127 *JENSENMETALTECH.COM*	©2020 Jensen Precast- All rights reserved. All materials appearing as Jensen Precast documents and the like are proprietary work product and are protected under U.S. copyright and other laws. Unless in conjunction with business conducted with Jensen Precast, any use of Jensen Precast work product without express, written consent is prohibited, and recipient is prohibited from distributing any and all work product to non-approved third parties under penalty of civil action.	PART NUMBER & DESCRIPTION: 200044662 FAS-3660-CH4-R-FONT-ATT-OH03 — REV:
MATERIAL SURFACE: Smooth			WEIGHT: 140 Lbs — DRAWN BY: E. Massey — SHEET: 6
			CREATED: 4/17/2018 — MODIFIED: 10/8/2020

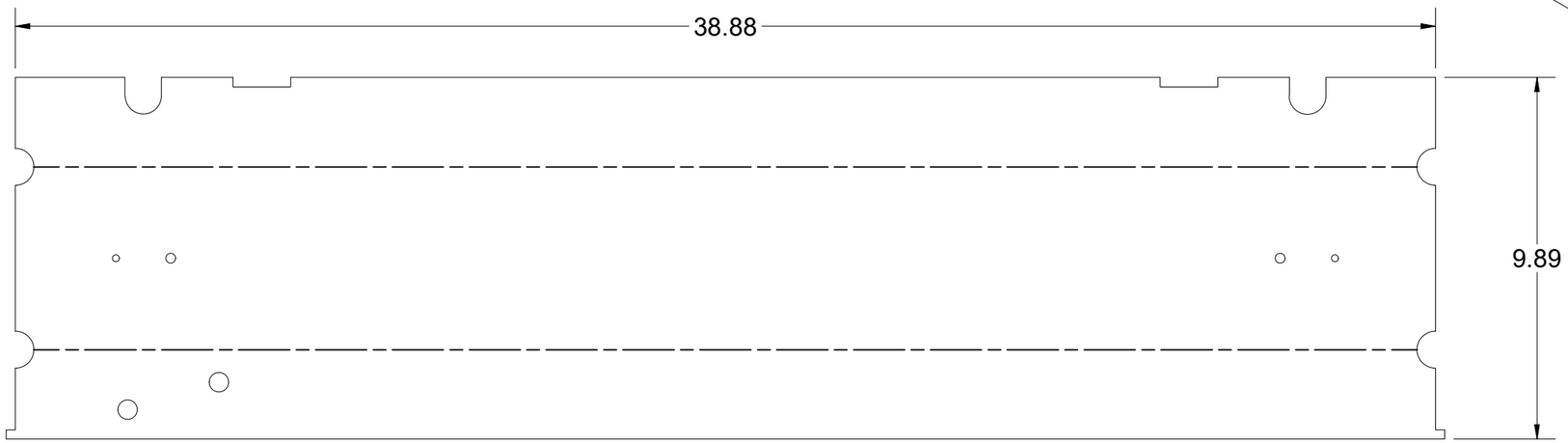

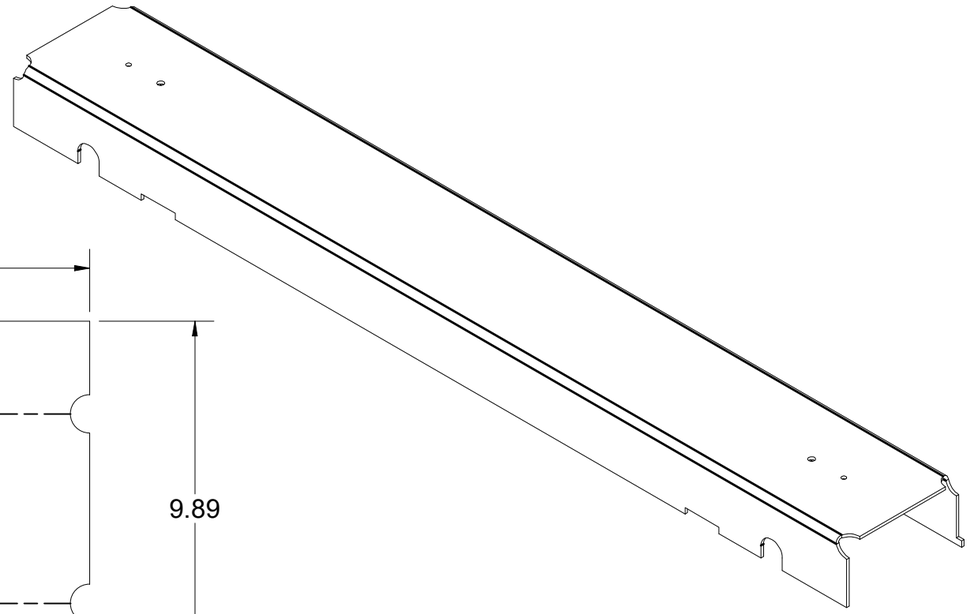

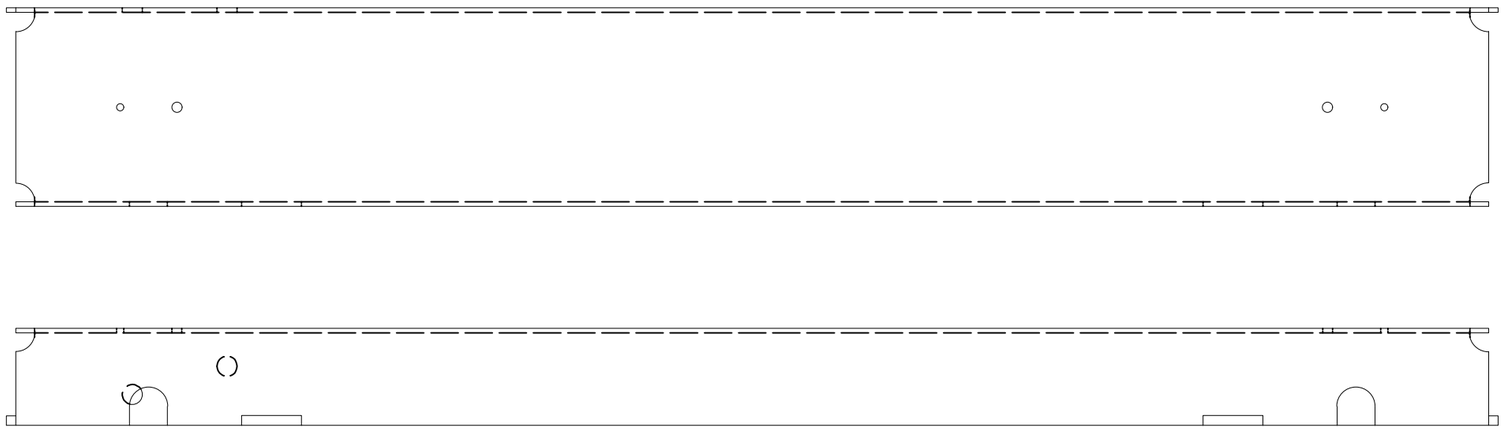

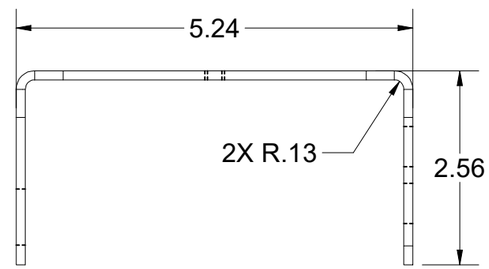

BEND TABLE				MATERIAL IFS: 100007840			
BEND RADIUS	V-OPENING	BEND ANGLE	BEND DEDUCTION	MATERIAL THK: 0.1196			
0.125	1"	90	0.2350	MAT DESCRIPTION: SHT STL GR80 GA-11 SM-HR RAW .1196			

JENSEN METALTECH
450 E. GLENDALE AVE. SPARKS. NV 89431
775-352-2716 FAX: 755-358-8127
JENSENMETALTECH.COM

©2020 Jensen Precast- All rights reserved. All materials appearing as Jensen Precast documents and the like are proprietary work product and are protected under U.S. copyright and other laws.
Unless in conjunction with business conducted with Jensen Precast, any use of Jensen Precast work product without express, written consent is prohibited, and recipient is prohibited from distributing any and all work product to non-approved third parties under penalty of civil action.

NAME & DESCRIPTION: 200044666 Door Component Steel Channel		REV: A-1
WEIGHT: 12.976 lbmass	DRAWN BY: E. Massey	SHEET: 7 OF 13
CREATED: 9/27/2018	MODIFIED: 10/8/2020	

100006598.idw

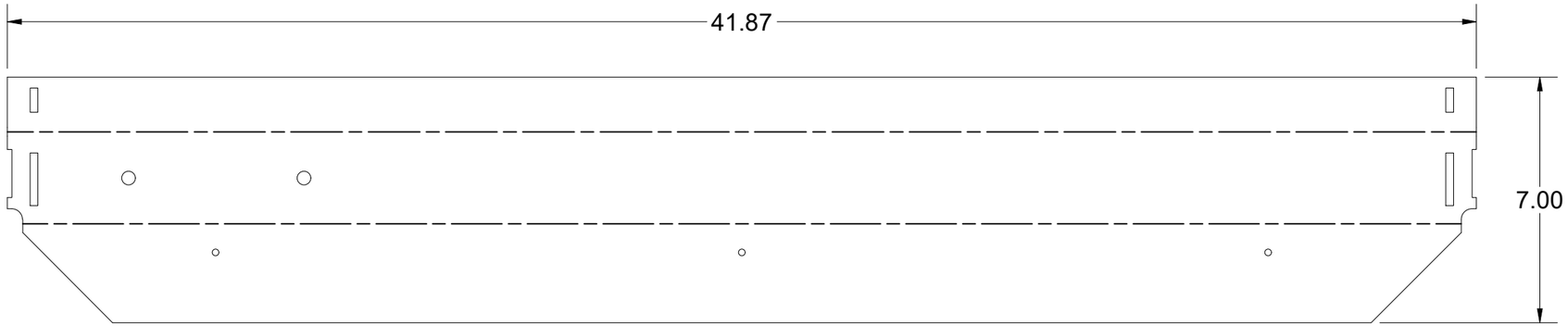

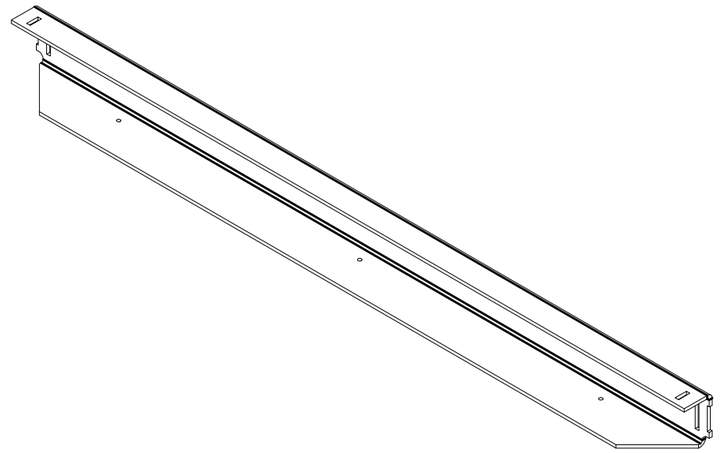

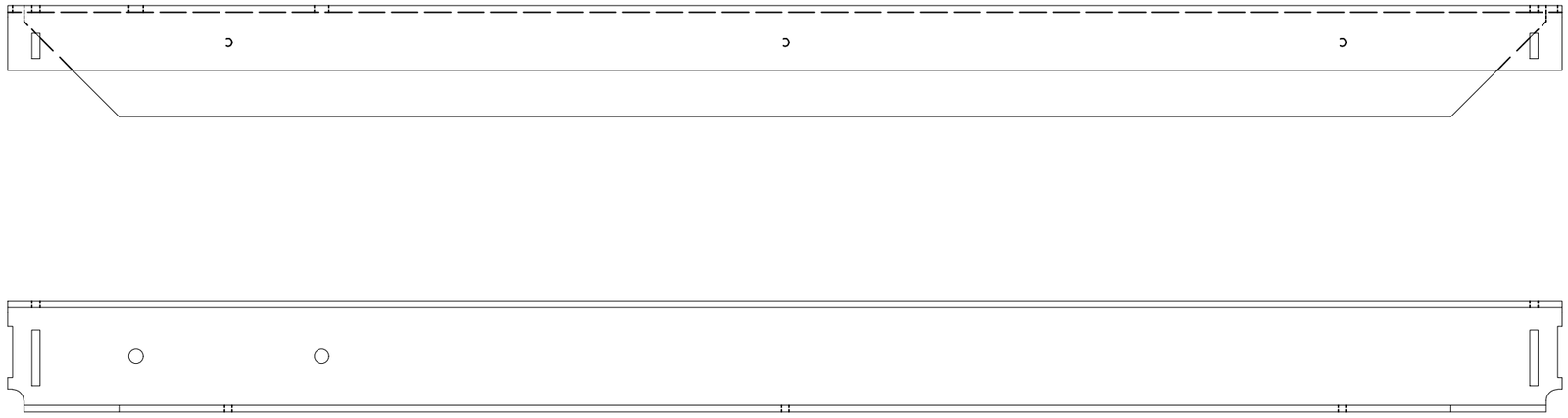

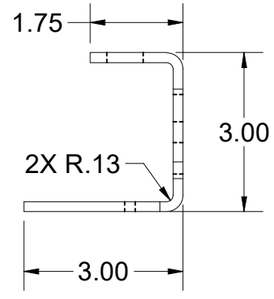

BEND TABLE				MATERIAL IFS: 100007734
BEND RADIUS	V-OPENING	BEND ANGLE	BEND DEDUCTION	MATERIAL THK: 0.1875
0.125	2"	90	0.3750	MAT DESCRIPTION: STL ASTM A36 SM-HRPO 60X120 RAW .1875

JENSEN METALTECH
450 E. GLENDALE AVE. SPARKS. NV 89431
775-352-2716 FAX: 755-358-8127
JENSENMETALTECH.COM

©2020 Jensen Precast- All rights reserved.
All materials appearing as Jensen Precast documents and the like are proprietary work product and are protected under U.S. copyright and other laws.
Unless in conjunction with business conducted with Jensen Precast, any use of Jensen Precast work product without express, written consent is prohibited, and recipient is prohibited from distributing any and all work product to non-approved third parties under penalty of civil action.

NAME & DESCRIPTION:	200044663 Frame Component Steel Frame End, Cast In	REV: A-1
WEIGHT: 15.413 lbmass	DRAWN BY: E. Massey	SHEET: 8 OF 13
CREATED: 9/27/2018	MODIFIED: 10/8/2020	

100006598.idw

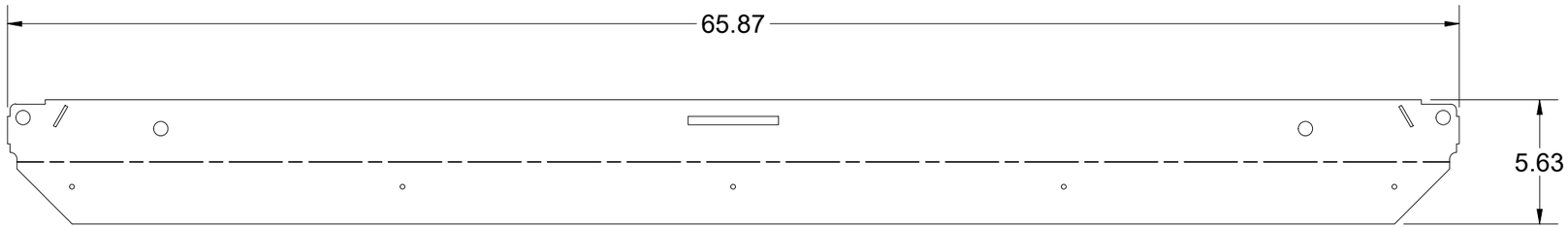

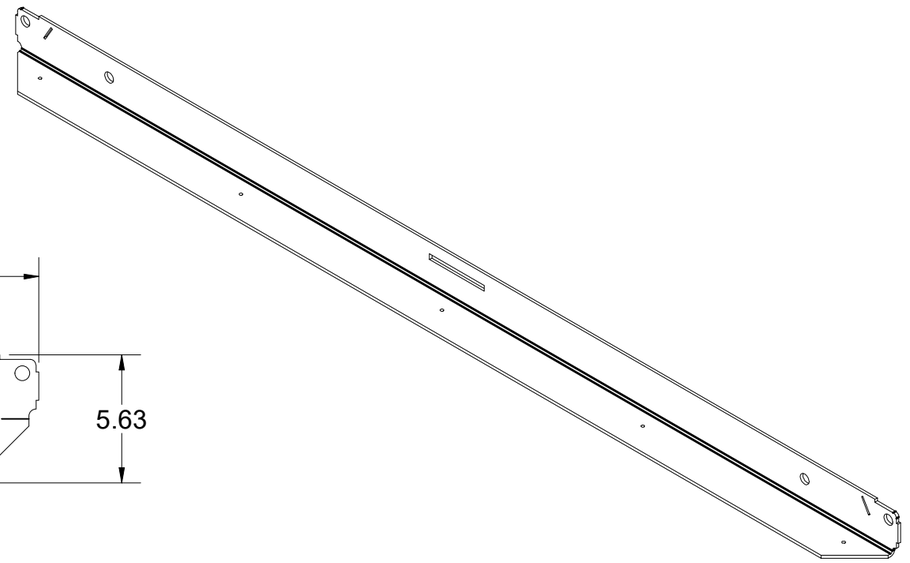

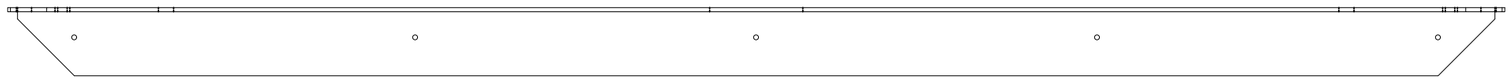

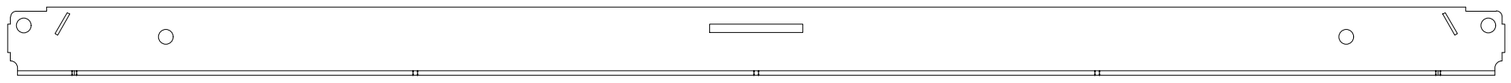

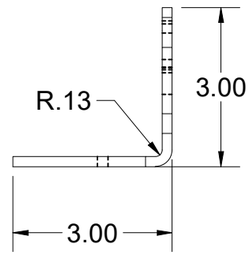

BEND TABLE			
BEND RADIUS	V-OPENING	BEND ANGLE	BEND DEDUCTION
0.125	2"	90	0.3750

MATERIAL IFS: 100007734

MATERIAL THK: 0.1875

MAT DESCRIPTION: STL ASTM A36 SM-HRPO 60X120 RAW .1875

JENSEN METALTECH
450 E. GLENDALE AVE. SPARKS. NV 89431
775-352-2716 FAX: 755-358-8127
JENSENMETALTECH.COM

©2020 Jensen Precast- All rights reserved.
All materials appearing as Jensen Precast documents and the like are proprietary work product and are protected under U.S. copyright and other laws.
Unless in conjunction with business conducted with Jensen Precast, any use of Jensen Precast work product without express, written consent is prohibited, and recipient is prohibited from distributing any and all work product to non-approved third parties under penalty of civil action.

NAME & DESCRIPTION: 200044664
Frame Component Steel Frame Side, Cast In

REV: A-1

WEIGHT: 19.320 lbmass

DRAWN BY: E. Massey

CREATED: 9/27/2018

MODIFIED: 10/8/2020

SHEET: 9 OF 13

100006598.idw

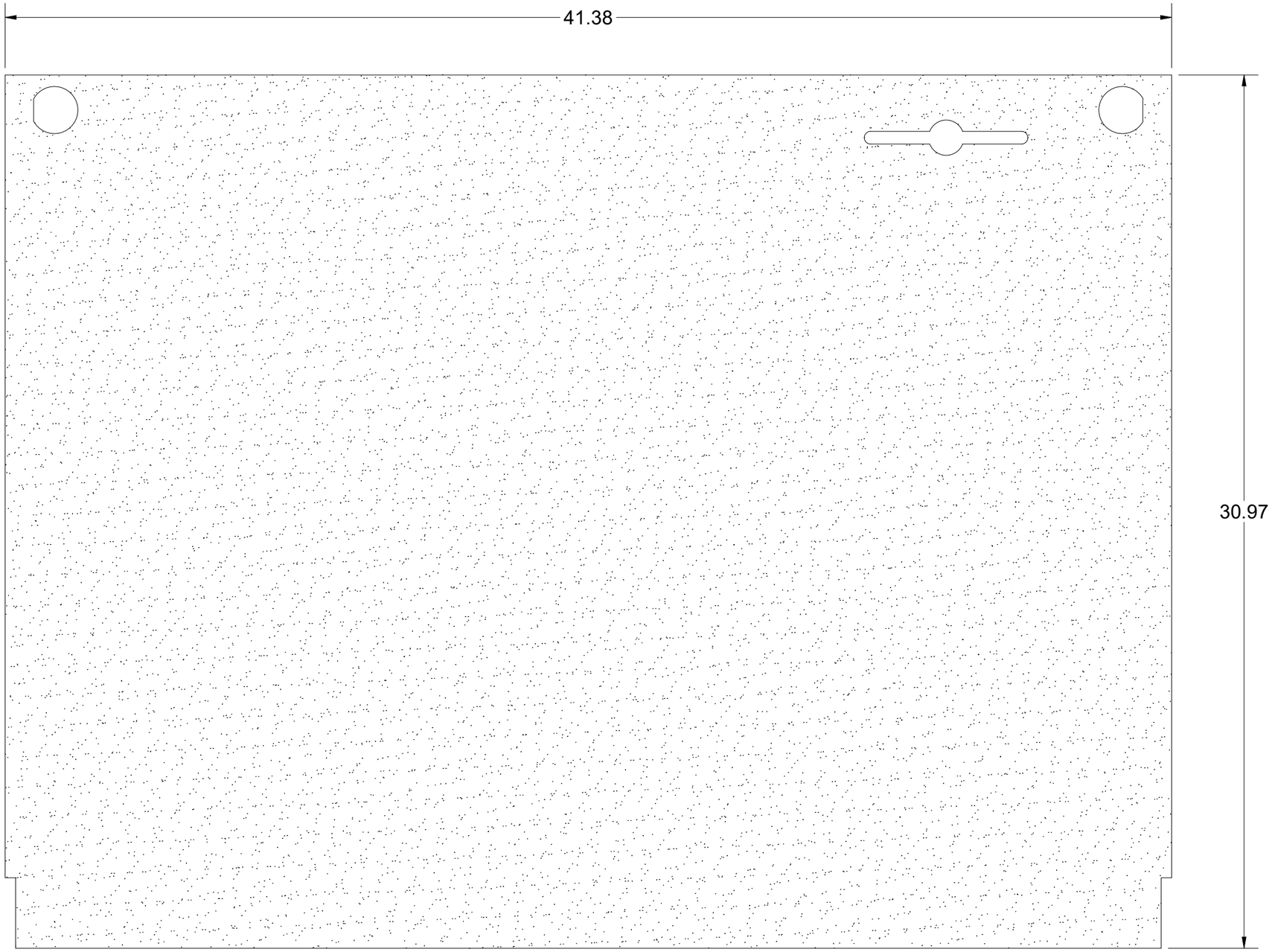

100006598.idw

BEND TABLE				MATERIAL IFS: 100007735			
BEND RADIUS	V-OPENING	BEND ANGLE	BEND DEDUCTION	MATERIAL THK: 0.25			
-	-	-	-	MAT DESCRIPTION: STL ASTM A36 SM-HRPO RAW .250			

JENSEN METALTECH
450 E. GLENDALE AVE. SPARKS. NV 89431
775-352-2716 FAX: 755-358-8127
JENSENMETALTECH.COM

©2020 Jensen Precast- All rights reserved.
All materials appearing as Jensen Precast documents and the like are proprietary work product and are protected under U.S. copyright and other laws.
Unless in conjunction with business conducted with Jensen Precast, any use of Jensen Precast work product without express, written consent is prohibited, and recipient is prohibited from distributing any and all work product to non-approved third parties under penalty of civil action.

NAME & DESCRIPTION:	200044671 Door Component Steel Plate, Top		REV: A-1
WEIGHT: 90.311 lbmass	DRAWN BY: E. Massey		SHEET: 10 OF 13
CREATED: 9/27/2018	MODIFIED: 10/8/2020		

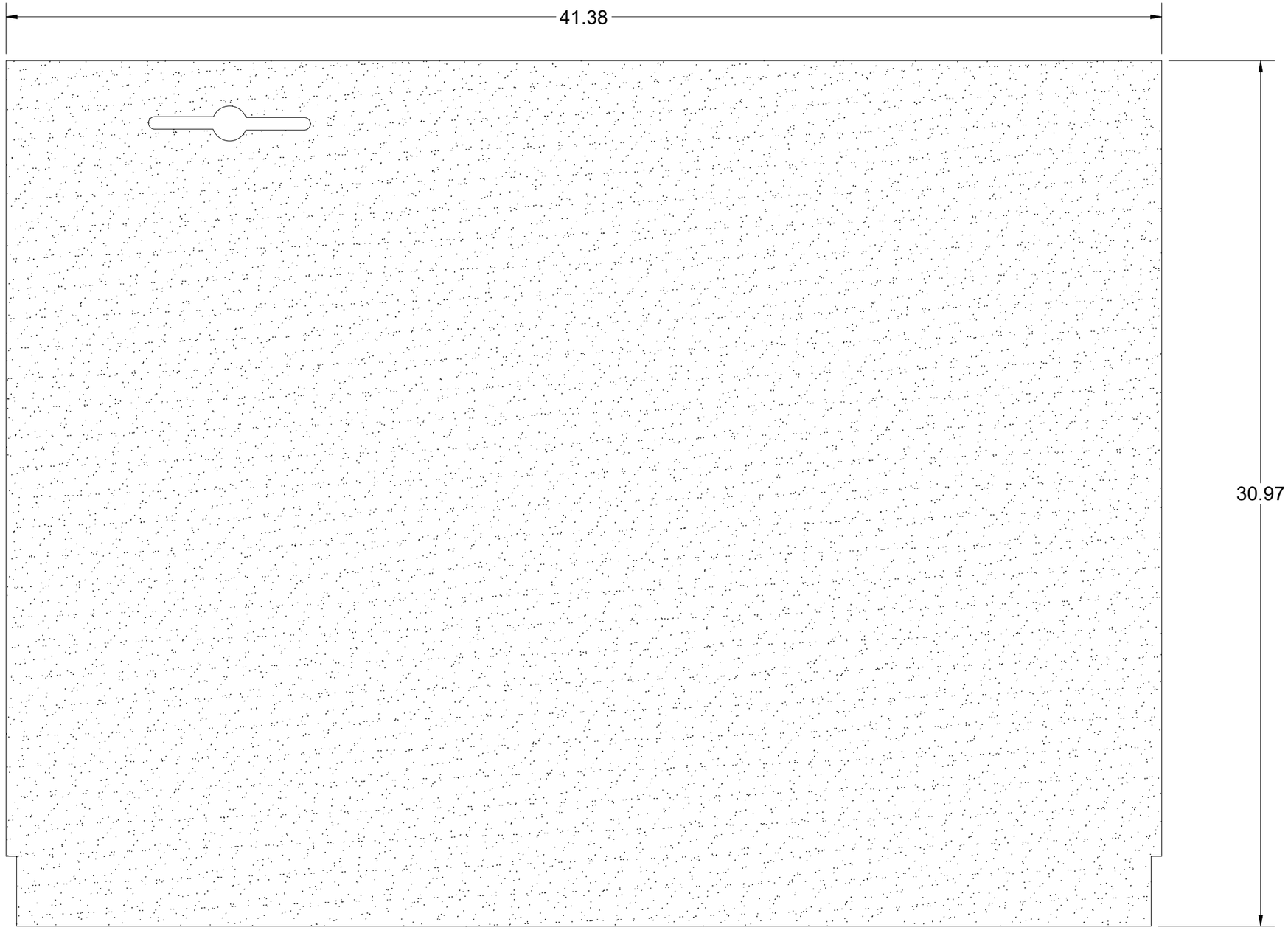

100006598.idw

BEND TABLE			
BEND RADIUS	V-OPENING	BEND ANGLE	BEND DEDUCTION
-	-	-	-

MATERIAL IFS: 100007735

MATERIAL THK: 0.25

MAT DESCRIPTION: STL ASTM A36 SM-HRPO RAW .250

JENSEN METALTECH
450 E. GLENDALE AVE. SPARKS. NV 89431
775-352-2716 FAX: 755-358-8127
JENSENMETALTECH.COM

©2020 Jensen Precast- All rights reserved.
All materials appearing as Jensen Precast documents and the like are proprietary work product and are protected under U.S. copyright and other laws.
Unless in conjunction with business conducted with Jensen Precast, any use of Jensen Precast work product without express, written consent is prohibited, and recipient is prohibited from distributing any and all work product to non-approved third parties under penalty of civil action.

NAME & DESCRIPTION: 200044667
Door Component Steel Plate, Bottom

REV: A-1

WEIGHT: 90.611 lbmass

DRAWN BY: E. Massey

CREATED: 9/27/2018

MODIFIED: 10/8/2020

SHEET: 11 OF 13

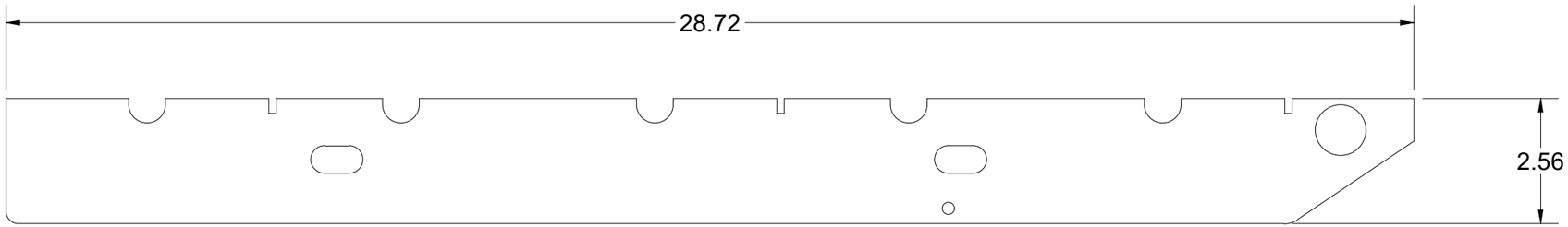

BEND TABLE			
BEND RADIUS	V-OPENING	BEND ANGLE	BEND DEDUCTION
-	-	-	-

MATERIAL IFS: 100007735

MATERIAL THK: 0.25

MAT DESCRIPTION: STL ASTM A36 SM-HRPO RAW .250

JENSEN METALTECH
450 E. GLENDALE AVE. SPARKS. NV 89431
775-352-2716 FAX: 755-358-8127
JENSENMETALTECH.COM

©2020 Jensen Precast- All rights reserved.
All materials appearing as Jensen Precast documents and the like are proprietary work product and are protected under U.S. copyright and other laws.
Unless in conjunction with business conducted with Jensen Precast, any use of Jensen Precast work product without express, written consent is prohibited, and recipient is prohibited from distributing any and all work product to non-approved third parties under penalty of civil action.

NAME & DESCRIPTION: 200044668 Door Component Steel Side Bar

REV: A-1

WEIGHT: 4.813 lbmass

DRAWN BY: E. Massey

CREATED: 9/27/2018

MODIFIED: 10/8/2020

SHEET: 12 OF 13

100006598.idw

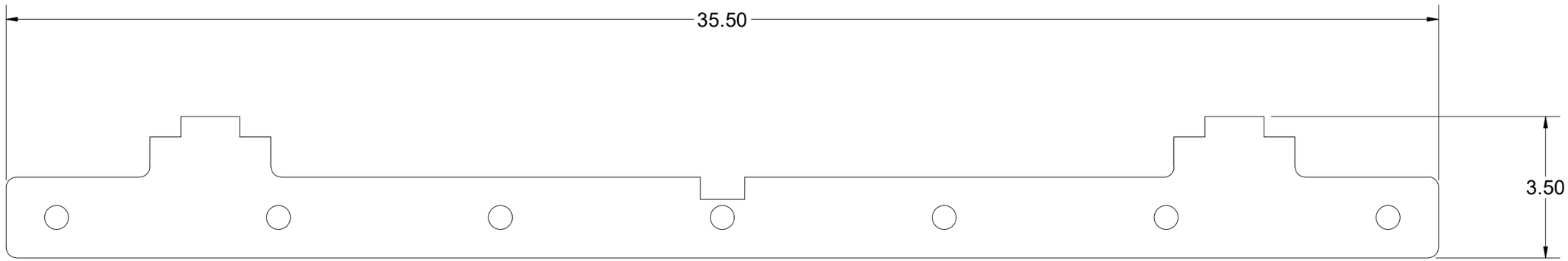

100006598.idw

BEND TABLE				MATERIAL IFS: 100007735
BEND RADIUS	V-OPENING	BEND ANGLE	BEND DEDUCTION	MATERIAL THK: 0.25
-	-	-	-	MAT DESCRIPTION: STL ASTM A36 SM-HRPO RAW .250

JENSEN METALTECH
450 E. GLENDALE AVE. SPARKS. NV 89431
775-352-2716 FAX: 755-358-8127
JENSENMETALTECH.COM

©2020 Jensen Precast- All rights reserved.
All materials appearing as Jensen Precast documents and the like are proprietary work product and are protected under U.S. copyright and other laws.
Unless in conjunction with business conducted with Jensen Precast, any use of Jensen Precast work product without express, written consent is prohibited, and recipient is prohibited from distributing any and all work product to non-approved third parties under penalty of civil action.

NAME & DESCRIPTION: 200044669 Door Component Steel Lap Bar		REV: A-1
WEIGHT: 5.387 lbmass	DRAWN BY: E. Massey	SHEET: 13 OF 13
CREATED: 1/4/2019	MODIFIED: 10/8/2020	