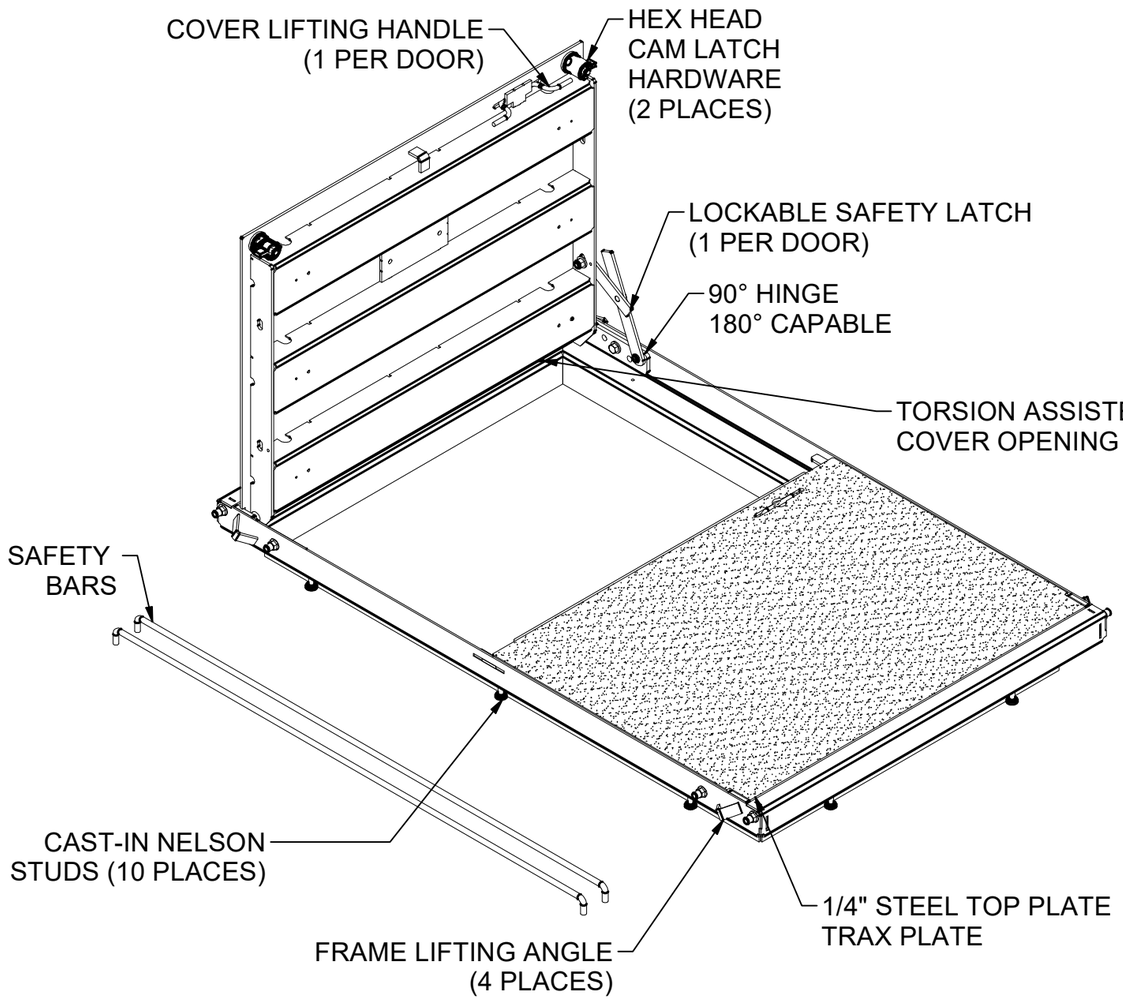

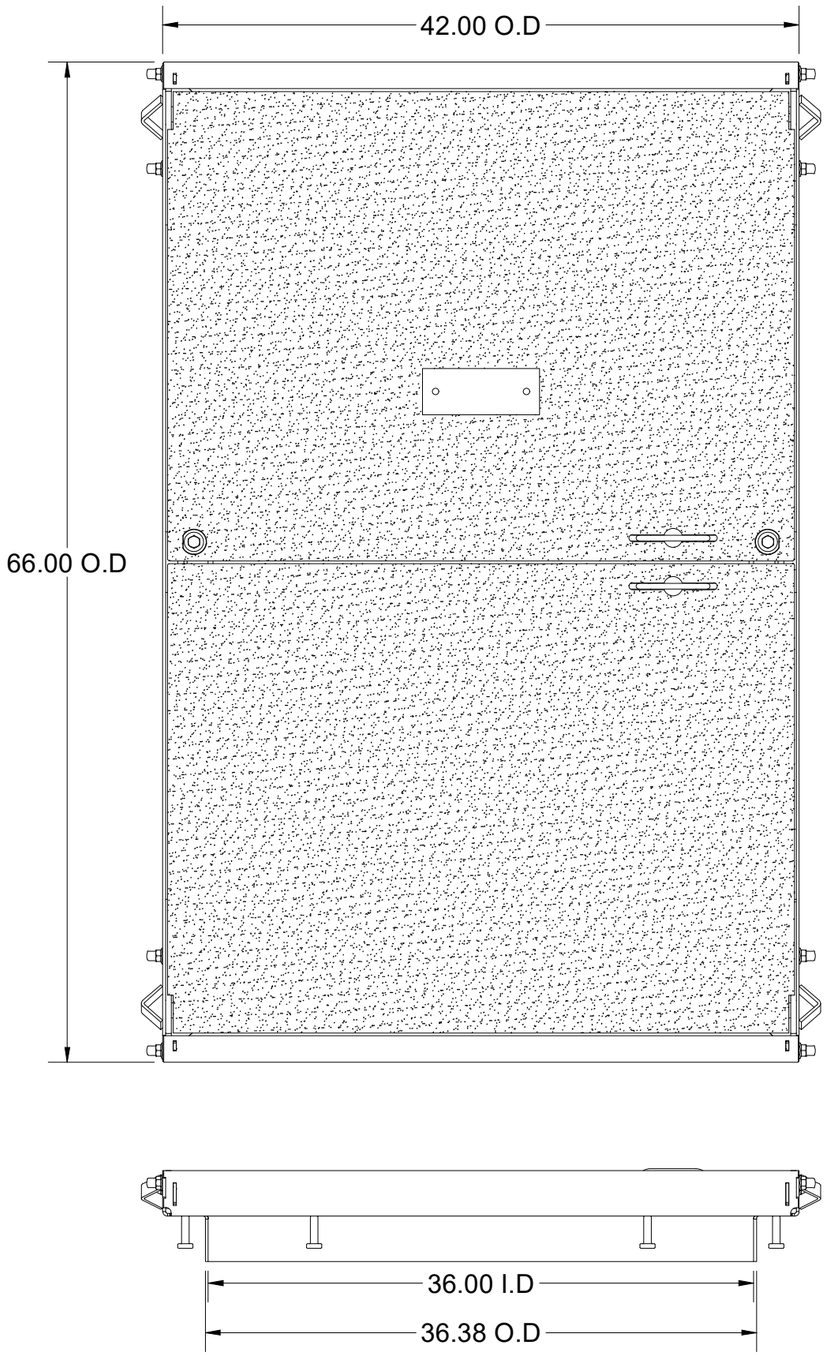

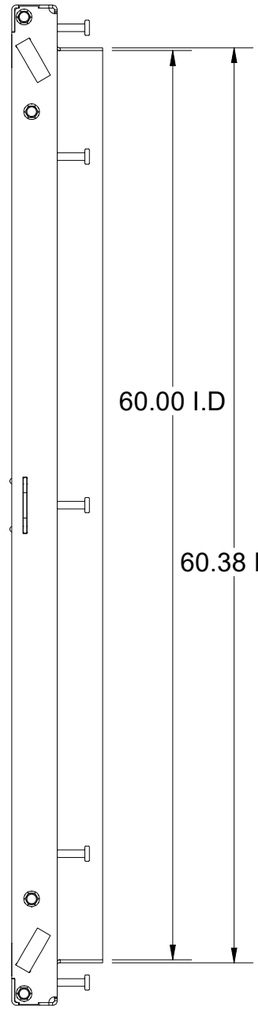

100006596.idw

LOADING CRITERIA: ASTM C1802 Load Level 04

16,000 lb load on 10" x 20" footprint, without impact restricted to parking spaces and areas within close proximity of roadways.

SURFACE:	TraxPlate™	FINISH:	Galvanized
WEIGHT:	417.39 lbs	MARKING:	As Noted

Infrastructure
JENSEN
527 Dunn Circle, Sparks, NV 89431
775-352-2716 FAX: 755-358-8127
JENSENMETALTECH.COM

©2025 Jensen Infrastructure - All rights reserved.
All materials appearing as Jensen Infrastructure documents and the like are proprietary work product and are protected under U.S. copyright and other laws. Unless in conjunction with business conducted with Jensen Infrastructure , any use of Jensen Infrastructure work product without express, written consent is prohibited, and recipient is prohibited from distributing any and all work product to non-approved third parties under penalty of civil action.
This product shall only be produced in a Jensen Infrastructure facility.

DESCRIPTION:	CAS2-3660-CH4-TRX-G-CL-FONT-OH06 36x60 Standard Cover Assembly (Loading Criteria Per ASTM C1802 Load Level 04, Steel, Hinged, Handle (1 Per Door), TraxPlate™, Galvanized) 06	REV:	A-1
PART NUMBER:	100006596	DRAWN BY:	C. Heywood
CREATED:	8/15/2025	MODIFIED:	12/18/2025
		SHEET:	1

BILL OF MATERIALS

ITEM	ITEM QTY	QTY	PART NUMBER	DESCRIPTION	PART NAME
1	1	1	200105118	FAS-3660-CH4-R-FONT-OH06	200105118
2	1	1	200105143	DAS2-T-3660-H4-TRX-R-CL-FONT	200105143
3	1	1	200105148	DAS2-B-3660-H4-TRX-R-CL-FONT	200105148
4	2	2	100007659	Hinge Assembly, Left, 1/2, Steel	100007659
5	2	2	100007666	Hinge Assembly, Right, Steel	100007666
6	2	2	100007933	SAFETY LATCH ASSY FOR UNI AND 90 D HINGE	100007933
7	4	4	100003823	Hex Bolt 1/2-13 UNC ZINC - PT - 1.5"	100003823
8	8	8	100011418	WASHER FLAT 1/2 NARROW ZINC	100011418
9	8	8	100026256	LOW-STRENGTH STEEL FLANGE NUT, 1/2" - 13 THREAD SIZE	100026256
10	4	4	100007869	BOLT SOCKET CAP - 1/2-13 UNC - 1.75 - 316SS	100007869
11	8	8	100007939	CAP VINYL .467 X 1/2	100007939
12	2	2	100007492	HEX NUT NYLOCK - 1/2-13 UNC - GR5 - ZINC	100007492
13	2	2	100007876	Bolt Shoulder Socket Head - 3/8-16 UNC - SD-0.5" - SL-0.3125" - Grade 5 - Zinc	100007876
14	2	2	100007857	NUT FINGER 1/2-13 BRASS	100007857
15	2	2	100011407	Hex Bolt 1/2-13 UNC ZINC - PT - 2.25"	100011407
16	2	2	100007729	HEX NUT SLOTTED CASTLE HEAD 1/2-13 SS	100007729
17	2	2	100007918	Cotter Pin 0.094x1.25" 18-8SS	100007918
18	2	2	100007915	SPRING COMPRESSION 055 X 5/8 X 7/8 LONG	100007915
19	2	2	100007924	LANYARD 3/64 W/PIN COATED SS	100007924
20	2	2	100007882	Rivet Blind Grip .1875" Large Domed Head Range-0.376-0.5" Steel	100007882
21	2	2	100007671	SPRING MOUNT ASSY .500	100007671
22	4	4	100007873	BOLT SOCKET CAP - 3/8-16 UNC - 1.25 - ZINC	100007873
23	4	4	100007859	RIVET NUT 3/8-16 FLAT KNURLED	100007859
24	2	2	100007727	TORSION HEX ROD .5 x 36in RAW	100007727
25	2	2	100007707	SAFETY BAR CAS2-3660 HNG	100007707

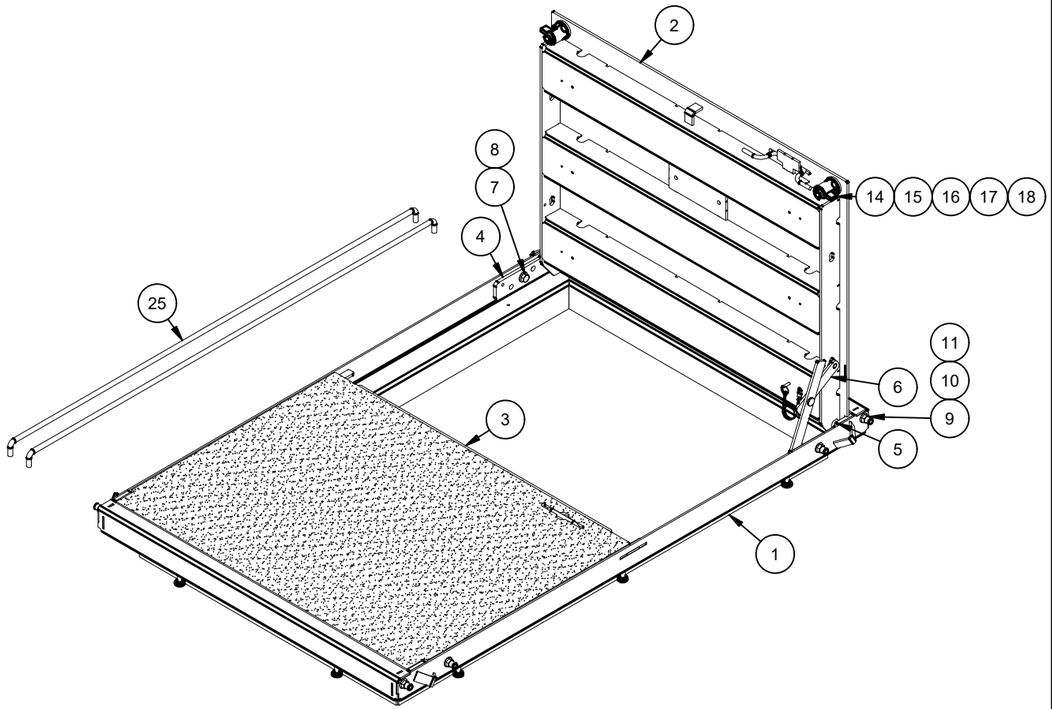

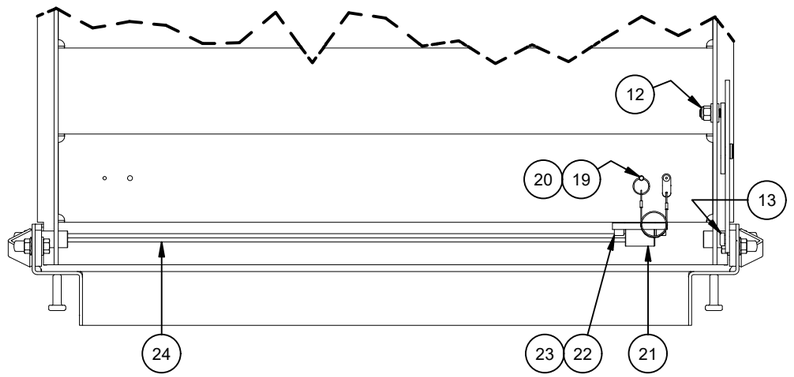

SECTION A-A
SCALE 1/9

REVISION HISTORY		
DESCRIPTION	DATE	REVISED BY
3410: REMOVE LEVELING SHIM PER EC 3410	7/22/2014	SCC
9183: UPDATED FOR PRODUCTION	2/15/2016	AB
11156: UPDATED CAM TOWERS TO REV F	8/02/2016	MH
12805: ADDED CUTOUTS TO FRAME END AND SIDE TO MAKE SYMMETRICAL	1/20/2017	JS
57209-30: CONVERTED FROM INVENTOR. CLEANED UP FRAME. UPDATED LAP BAR AND CATCH PLATES. REPLACED ALL 100007728 WITH 100026256.	8/15/2025	COLLIN HEYWOOD

MATERIAL FINISH: Galvanized

MATERIAL SURFACE: TraxPlate™

Infrastructure JENSEN
527 Dunn Circle, Sparks, NV 89431
775-352-2716 FAX: 755-358-8127
JENSENMETALTECH.COM

©2025 Jensen Infrastructure - All rights reserved.
All materials appearing as Jensen Infrastructure documents and the like are proprietary work product and are protected under U.S. copyright and other laws. Unless in conjunction with business conducted with Jensen Infrastructure , any use of Jensen Infrastructure work product without express, written consent is prohibited, and recipient is prohibited from distributing any and all work product to non-approved third parties under penalty of civil action.
This product shall only be produced in a Jensen Infrastructure facility.

PART NUMBER & DESCRIPTION: 100006596 CAS2-3660-CH4-TRX-G-CL-FONT-OH06

REV: A-1

WEIGHT: 417.39 Lbs

DRAWN BY: C. Heywood

CREATED: 8/15/2025

MODIFIED: 12/18/2025

SHEET: 2

100006596.idw

BURN LIST - BOM

PART NAME	ITEM QTY	QTY	DESCRIPTION	STOCK NUMBER	MATERIAL	MASS	SHEET
200087246	1	4.842 lbmass	Door Component Steel Lap Bar 36in, 2.5" Stiffener Offset	100007735	STL ASTM A36 SM-HRPO RAW .250	4.842 lbmass	07
200105060	1	1.905 lbmass	Name Plate Backing Plate, Interior, 6" Hole Space, End Tabs, Steel	100007735	STL ASTM A36 SM-HRPO RAW .250	1.905 lbmass	08
200105113	2	57.284 lbmass	Frame Component Steel Frame Side, Cast In	100007734	STL ASTM A36 SM-HRPO 60X120 RAW .1875	28.636 lbmass	09
200105115	2	42.027 lbmass	Frame Component Steel Frame End, Cast In	100007734	STL ASTM A36 SM-HRPO 60X120 RAW .1875	21.007 lbmass	10
200105130	1	88.650 lbmass	Door Component Steel Plate, Top Nameplate	100007735	STL ASTM A36 SM-HRPO RAW .250	88.650 lbmass	11
200105132	6	78.031 lbmass	Door Component Steel Channel Nameplate	100007840	SHT STL GR80 GA-11 SM-HR RAW .1196	13.035 lbmass	12
200105140	4	19.493 lbmass	Door Component Steel Side Bar	100007735	STL ASTM A36 SM-HRPO RAW .250	4.873 lbmass	13
200105142	1	90.611 lbmass	Door Component Steel Plate, Bottom	100007735	STL ASTM A36 SM-HRPO RAW .250	90.611 lbmass	14

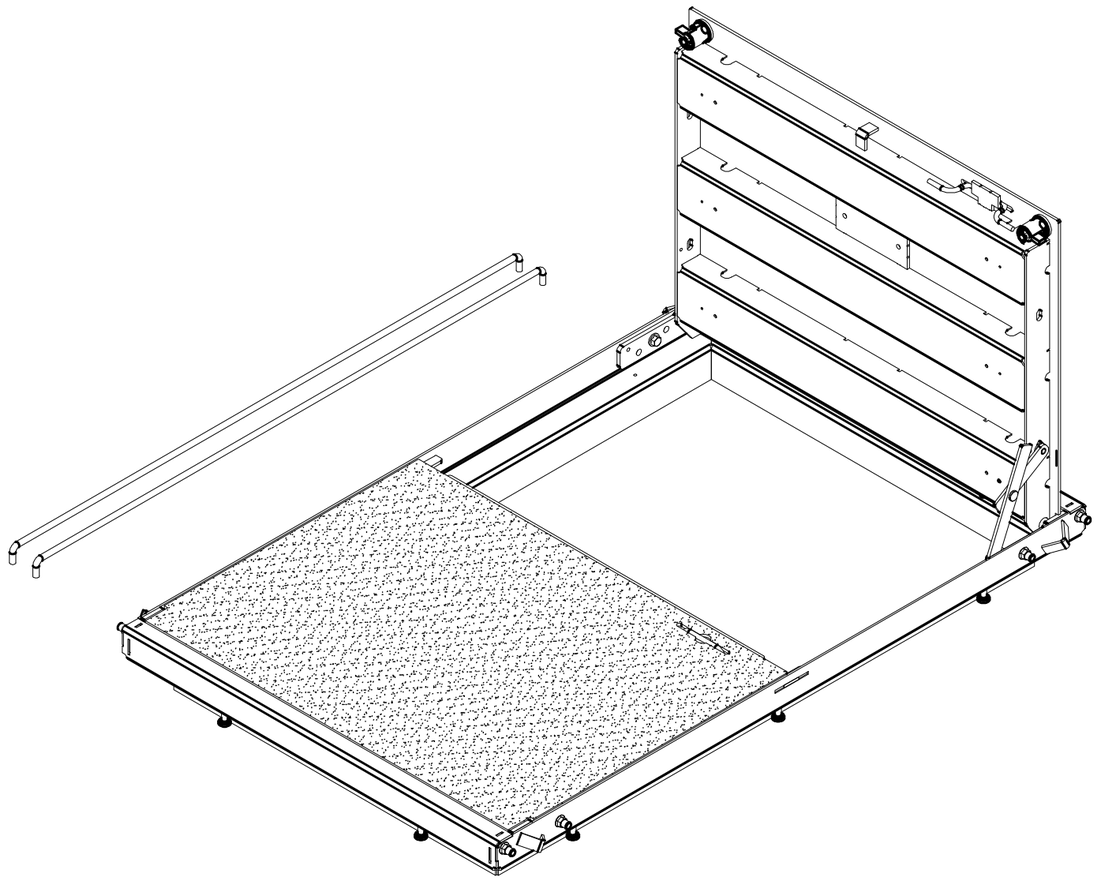

100006596.idw

MATERIAL FINISH: Galvanized

MATERIAL SURFACE: TraxPlate™

Infrastructure JENSEN
527 Dunn Circle, Sparks, NV 89431
775-352-2716 FAX: 755-358-8127
JENSENMETALTECH.COM

©2025 Jensen Infrastructure - All rights reserved.
All materials appearing as Jensen Infrastructure documents and the like are proprietary work product and are protected under U.S. copyright and other laws. Unless in conjunction with business conducted with Jensen Infrastructure , any use of Jensen Infrastructure work product without express, written consent is prohibited, and recipient is prohibited from distributing any and all work product to non-approved third parties under penalty of civil action.
This product shall only be produced in a Jensen Infrastructure facility.

PART NUMBER & DESCRIPTION: 100006596
CAS2-3660-CH4-TRX-G-CL-FONT-OH06

REV: A-1

WEIGHT: 417.39 Lbs

DRAWN BY: C. Heywood

SHEET: 3

CREATED: 8/15/2025

MODIFIED: 12/18/2025

BILL OF MATERIALS

ITEM	ITEM QTY	QTY	PART NUMBER	DESCRIPTION	PART NAME
1	1	88.650 lbmass	100007735	Door Component Steel Plate, Top Nameplate	200105130
2	2	9.747 lbmass	100007735	Door Component Steel Side Bar	200105140
3	3	39.016 lbmass	100007840	Door Component Steel Channel Nameplate	200105132
4	1	1.905 lbmass	100007735	Name Plate Backing Plate, Interior, 6" Hole Space, End Tabs, Steel	200105060
5	2	2	100007970	CAM TOWER CAST STEEL	100007970
6	1	1	100007646	HANDLE RETAINER STL	100007646
7	1	1	100007644	LEAF PULL HANDLE A36 3/8IN DIAMETER	100007644
8	1	1	100007647	LIFTING BRACKET STEEL LEAF	100007647

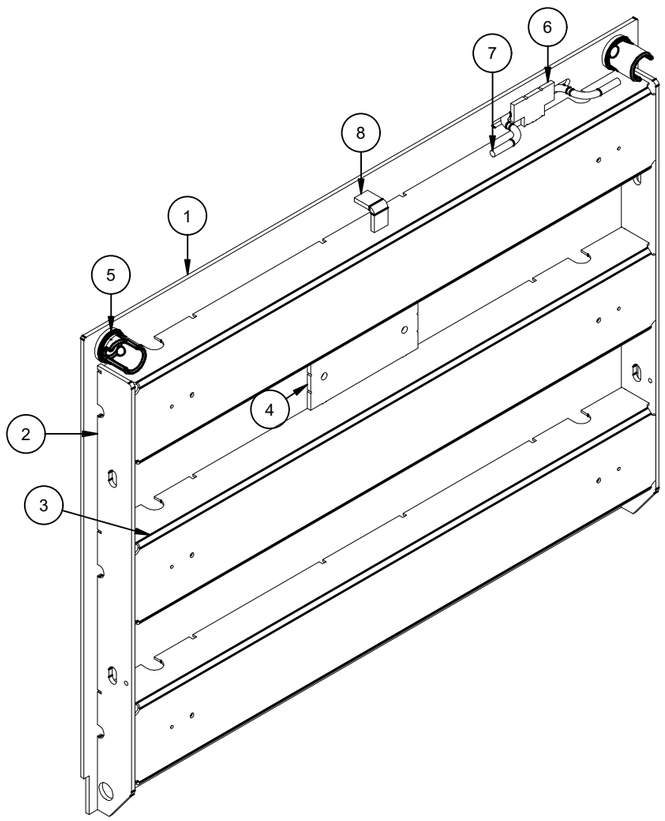

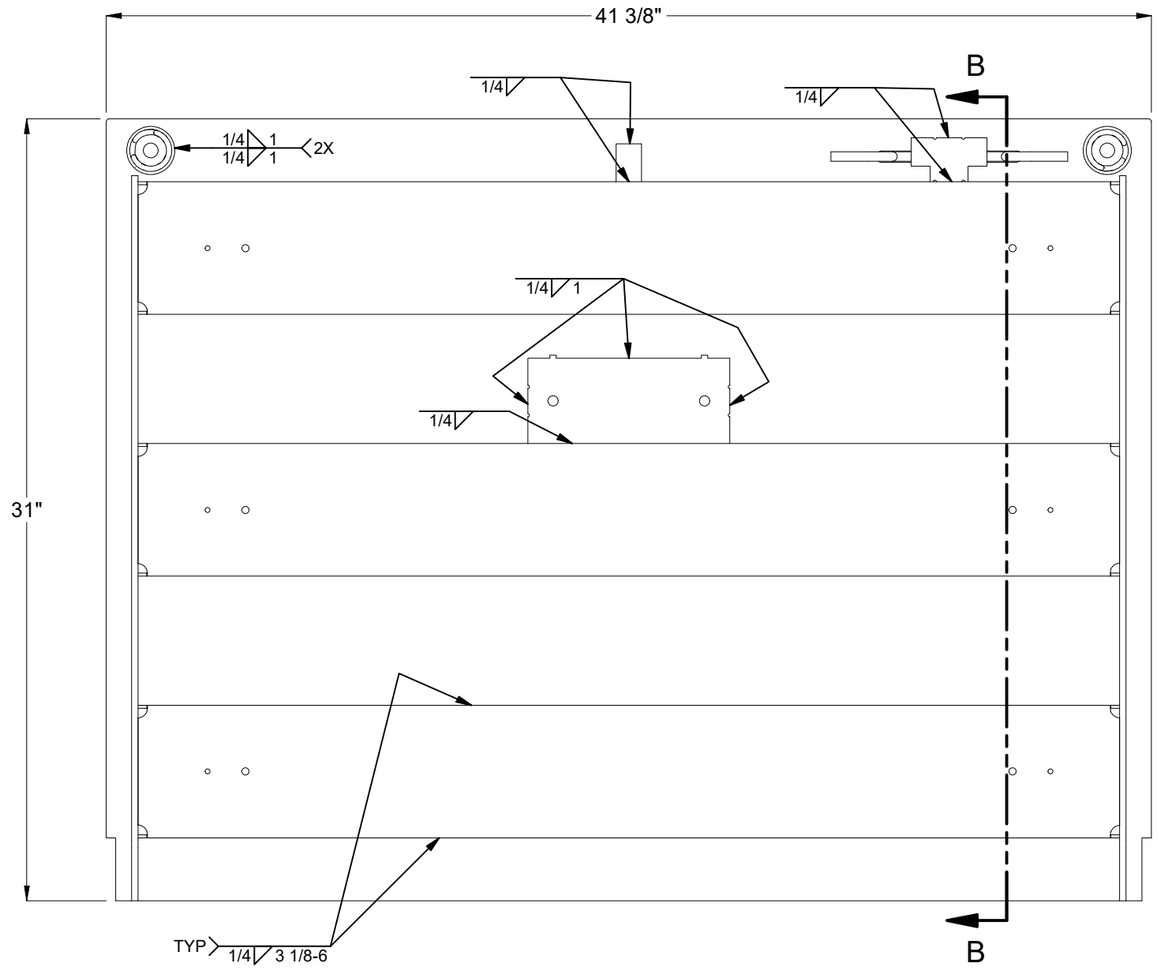

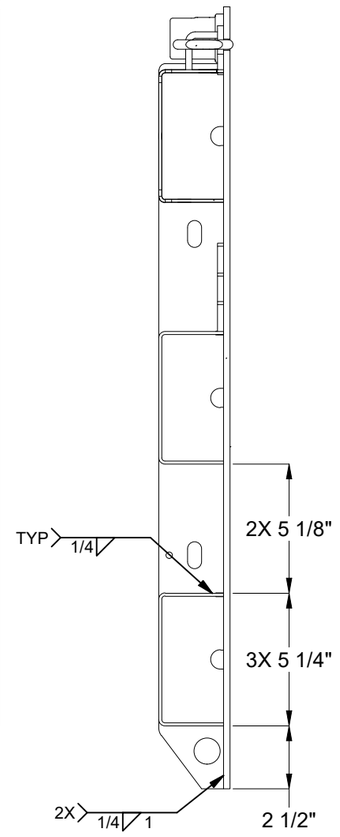

SECTION B-B
SCALE 1/6

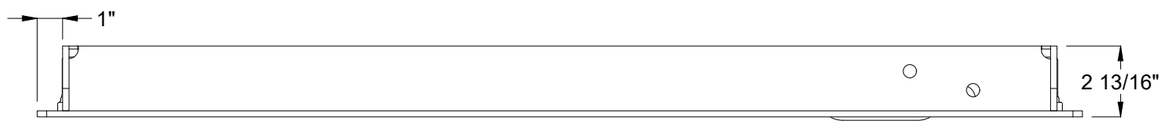

100006596.idw

MATERIAL FINISH: Raw	Infrastructure JENSEN 527 Dunn Circle, Sparks, NV 89431 775-352-2716 FAX: 755-358-8127 *JENSENMETALTECH.COM*	©2025 Jensen Infrastructure - All rights reserved. All materials appearing as Jensen Infrastructure documents and the like are proprietary work product and are protected under U.S. copyright and other laws. Unless in conjunction with business conducted with Jensen Infrastructure , any use of Jensen Infrastructure work product without express, written consent is prohibited, and recipient is prohibited from distributing any and all work product to non-approved third parties under penalty of civil action. This product shall only be produced in a Jensen Infrastructure facility.	PART NUMBER & DESCRIPTION: 200105143 DAS2-T-3660-H4-TRX-R-CL-FONT	REV: A-1
MATERIAL SURFACE: TraxPlate™			WEIGHT: 141.31 Lbs CREATED: 8/15/2025	DRAWN BY: C. Heywood MODIFIED: 12/18/2025	SHEET: 4

BILL OF MATERIALS

ITEM	ITEM QTY	QTY	PART NUMBER	DESCRIPTION	PART NAME
1	1	90.611 lbmass	100007735	Door Component Steel Plate, Bottom	200105142
2	2	9.747 lbmass	100007735	Door Component Steel Side Bar	200105140
3	3	39.016 lbmass	100007840	Door Component Steel Channel Nameplate	200105132
4	1	4.842 lbmass	100007735	Door Component Steel Lap Bar 36in, 2.5" Stiffener Offset	200087246
5	1	1	100007647	LIFTING BRACKET STEEL LEAF	100007647
6	1	1	100007644	LEAF PULL HANDLE A36 3/8IN DIAMETER	100007644

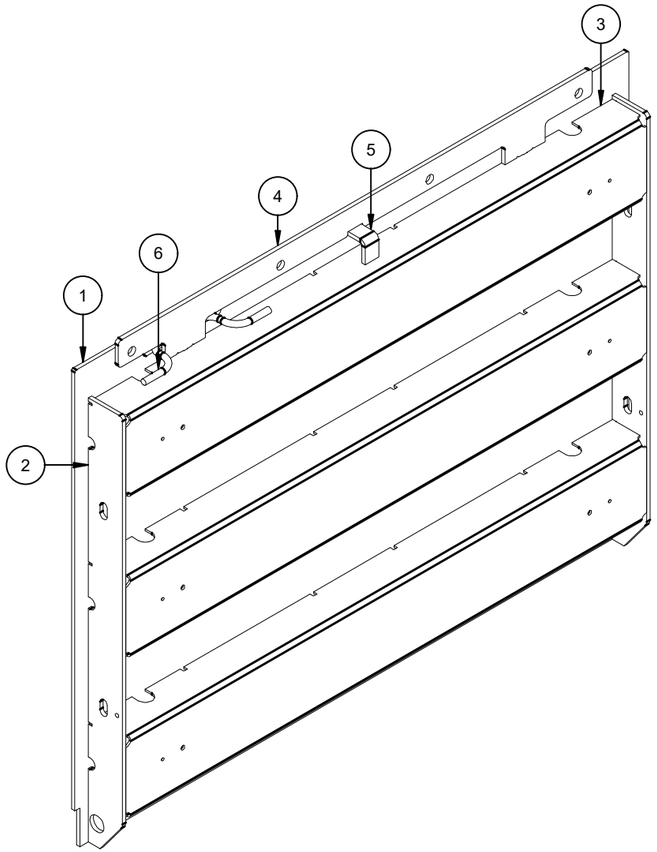

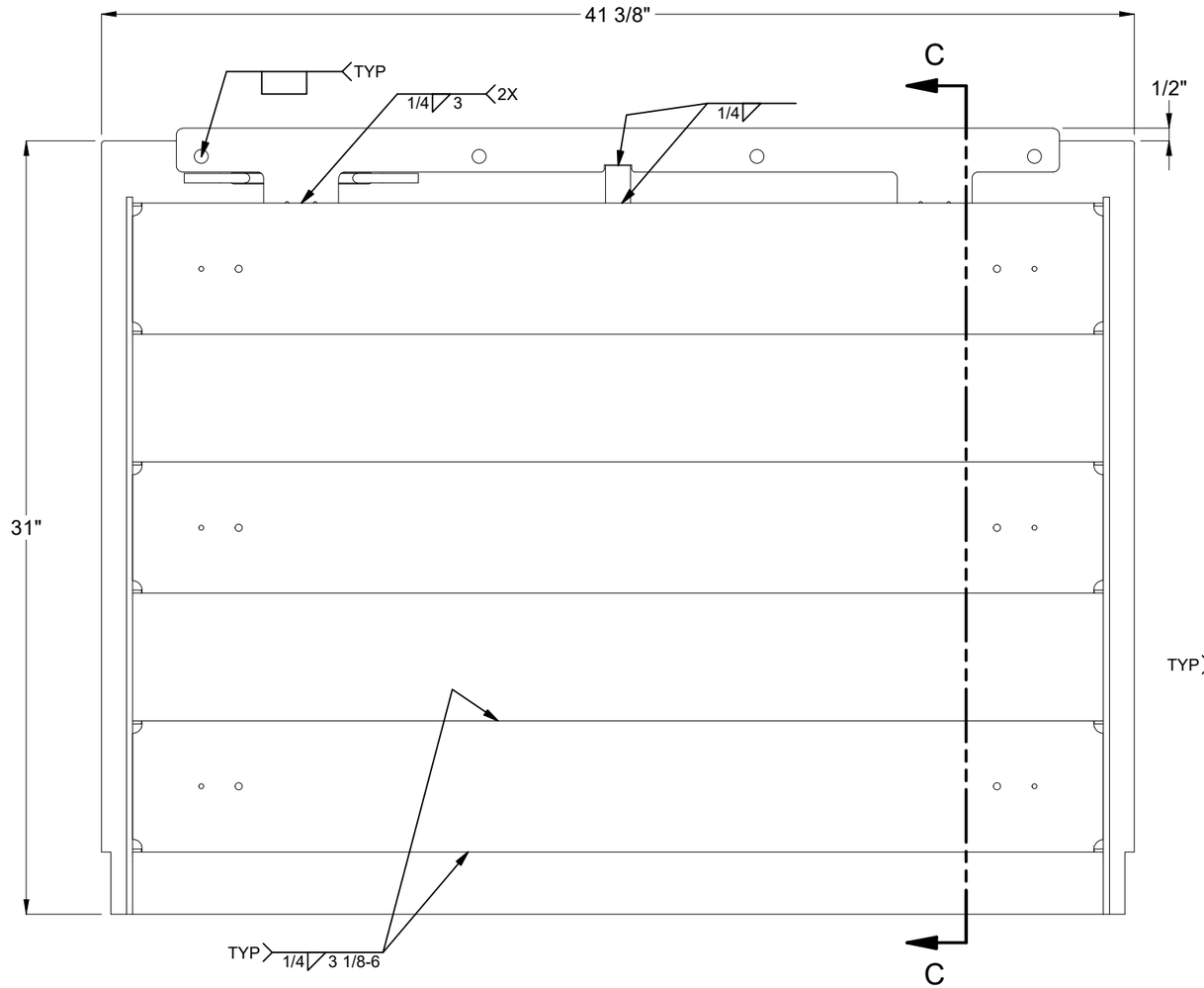

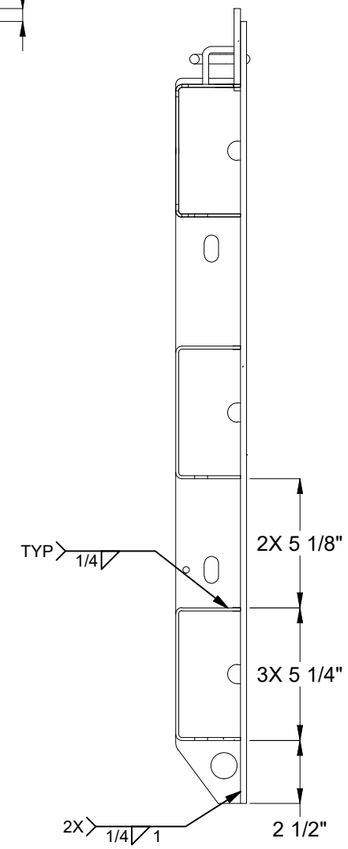

SECTION C-C
SCALE 1/6

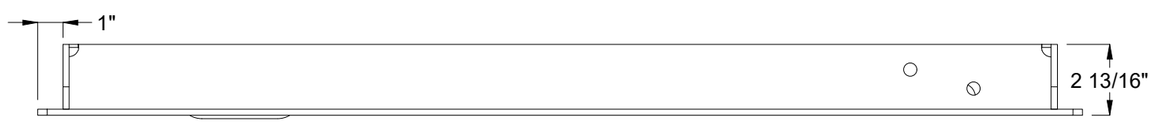

100006596.idw

MATERIAL FINISH: Raw	Infrastructure JENSEN 527 Dunn Circle, Sparks, NV 89431 775-352-2716 FAX: 755-358-8127 *JENSENMETALTECH.COM*	©2025 Jensen Infrastructure - All rights reserved. All materials appearing as Jensen Infrastructure documents and the like are proprietary work product and are protected under U.S. copyright and other laws. Unless in conjunction with business conducted with Jensen Infrastructure , any use of Jensen Infrastructure work product without express, written consent is prohibited, and recipient is prohibited from distributing any and all work product to non-approved third parties under penalty of civil action. This product shall only be produced in a Jensen Infrastructure facility.	PART NUMBER & DESCRIPTION: 200105148 DAS2-B-3660-H4-TRX-R-CL-FONT WEIGHT: 144.62 Lbs DRAWN BY: C. Heywood CREATED: 8/15/2025 MODIFIED: 12/18/2025	REV: A-1 SHEET: 5
MATERIAL SURFACE: TraxPlate™				

BILL OF MATERIALS

ITEM	ITEM QTY	QTY	PART NUMBER	DESCRIPTION	PART NAME
1	2	57.284 lbmass	100007734	Frame Component Steel Frame Side, Cast In	200105113
2	2	42.027 lbmass	100007734	Frame Component Steel Frame End, Cast In	200105115
3	4	4	200018691	FRAME BOLT DOUBLER SLOT	200018691
4	2	2	200100755	Frame Cam Latch Catch Plate - 1/4" A36, Dual Door, 0.8125" Overhang	200100755
5	10	10	100007889	Anchor Weld Stud - H4L - 0.5" - A29/A108 - 2.125"	100007889
6	4	4	100007641	FRAME LIFTING BRACKET	100007641

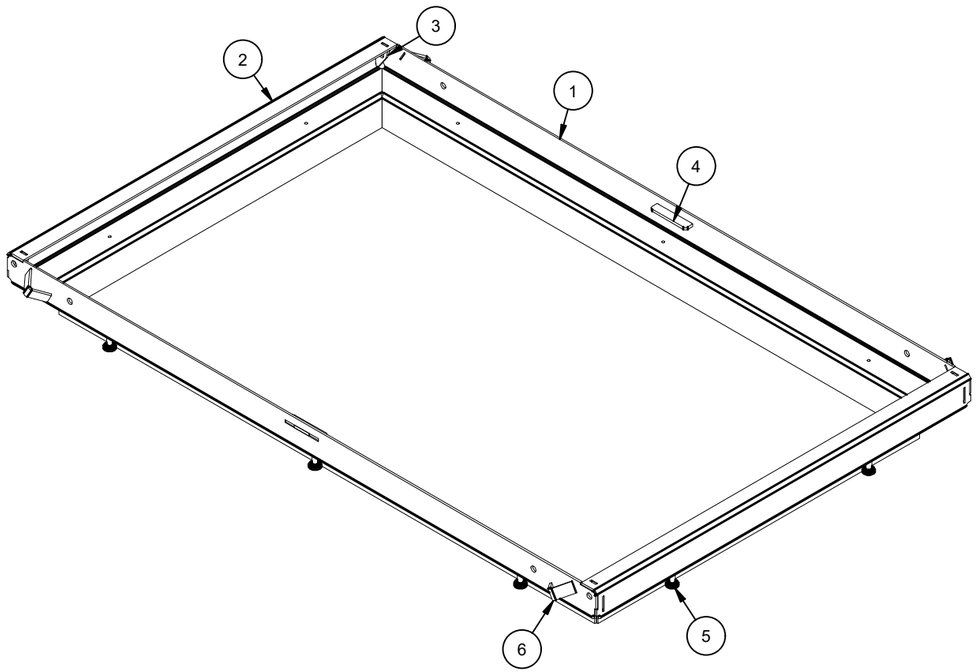

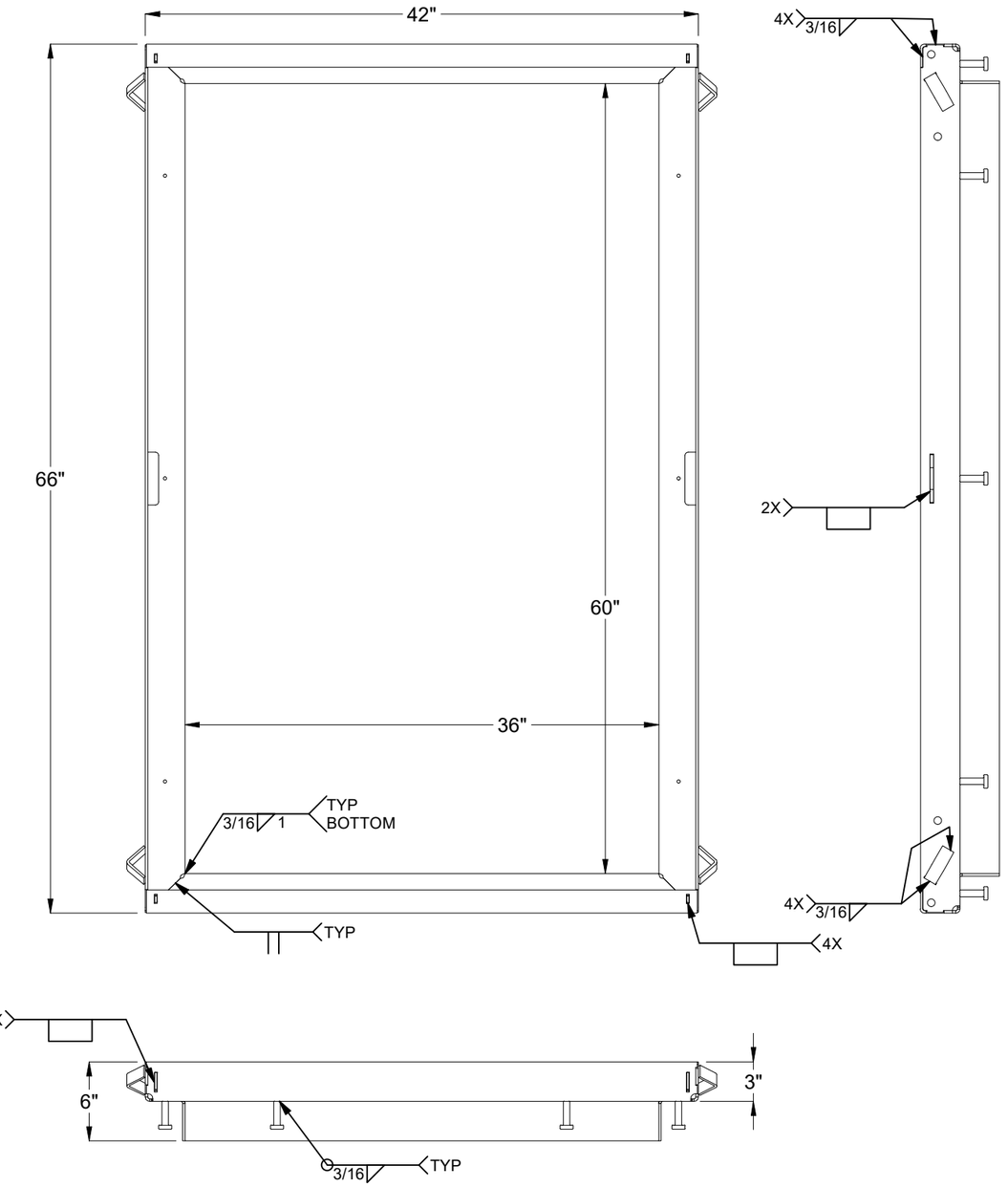

100006596.idw

MATERIAL FINISH: Raw	Infrastructure JENSEN 527 Dunn Circle, Sparks, NV 89431 775-352-2716 FAX: 755-358-8127 *JENSENMETALTECH.COM*	©2025 Jensen Infrastructure - All rights reserved. All materials appearing as Jensen Infrastructure documents and the like are proprietary work product and are protected under U.S. copyright and other laws. Unless in conjunction with business conducted with Jensen Infrastructure , any use of Jensen Infrastructure work product without express, written consent is prohibited, and recipient is prohibited from distributing any and all work product to non-approved third parties under penalty of civil action. This product shall only be produced in a Jensen Infrastructure facility.	PART NUMBER & DESCRIPTION: 200105118 FAS-3660-CH4-R-FONT-OH06
MATERIAL SURFACE: Smooth			WEIGHT: 102.7 Lbs DRAWN BY: C. Heywood CREATED: 8/15/2025 MODIFIED: 12/18/2025

REV: A-1

SHEET: 6

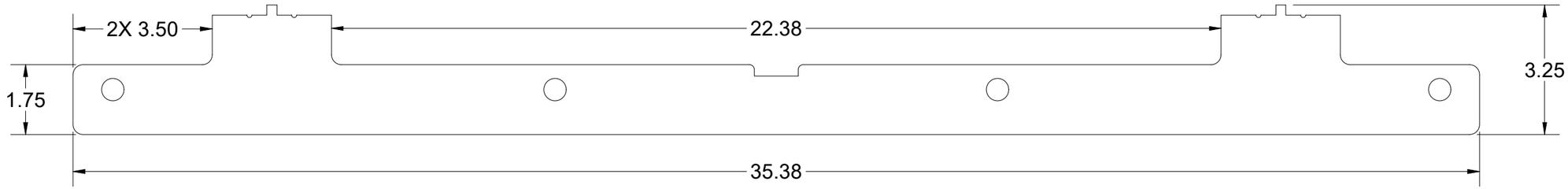

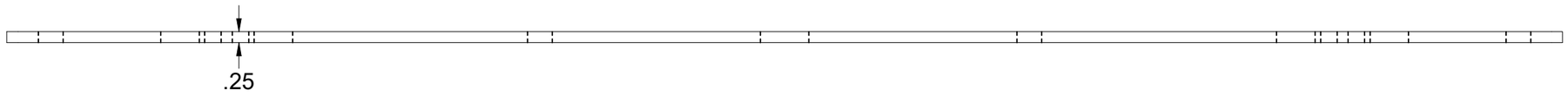

BEND TABLE				MATERIAL IFS: 100007735
BEND RADIUS	V-OPENING	BEND ANGLE	BEND DEDUCTION	MATERIAL THK: 0.25
-	-	- 0	-	MAT DESCRIPTION: STL ASTM A36 SM-HRPO RAW .250

Infrastructure
JENSEN
527 Dunn Circle, Sparks, NV 89431
775-352-2716 FAX: 755-358-8127
JENSENMETALTECH.COM

©2025 Jensen Infrastructure - All rights reserved.
All materials appearing as Jensen Infrastructure documents and the like are proprietary work product and are protected under U.S. copyright and other laws. Unless in conjunction with business conducted with Jensen Infrastructure , any use of Jensen Infrastructure work product without express, written consent is prohibited, and recipient is prohibited from distributing any and all work product to non-approved third parties under penalty of civil action.
This product shall only be produced in a Jensen Infrastructure facility.

NAME & DESCRIPTION:	200087246 Door Component Steel Lap Bar 36in, 2.5" Stiffener Offset		REV: A-1
WEIGHT: 4.842 lbmass	DRAWN BY: C. Heywood		SHEET: 7 OF 14
CREATED: 8/15/2025	MODIFIED: 12/18/2025		

100006596.idw

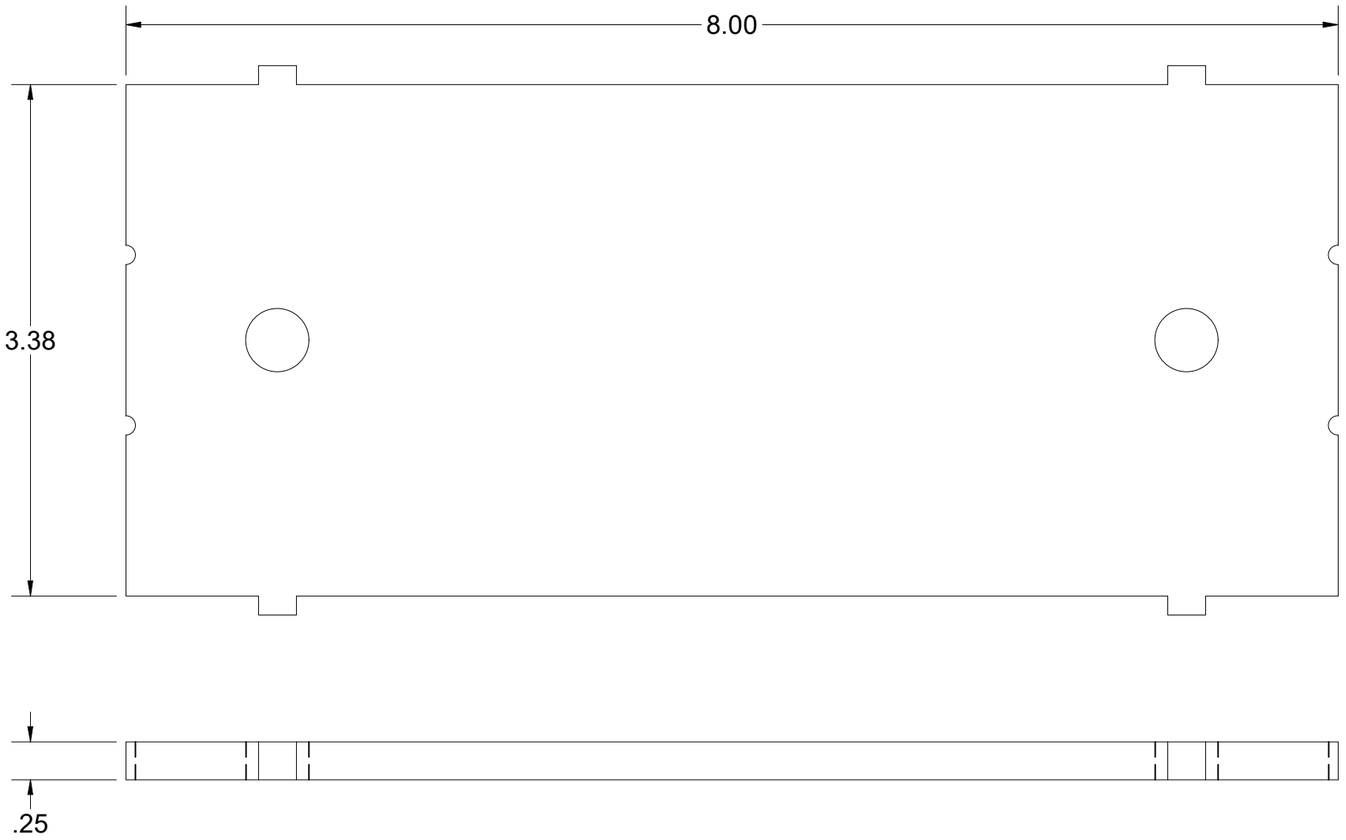

BEND TABLE			
BEND RADIUS	V-OPENING	BEND ANGLE	BEND DEDUCTION
-	-	- 0	-

MATERIAL IFS: 100007735

MATERIAL THK: 0.25

MAT DESCRIPTION: STL ASTM A36 SM-HRPO RAW .250

Infrastructure
JENSEN
527 Dunn Circle, Sparks, NV 89431
775-352-2716 FAX: 755-358-8127
JENSENMETALTECH.COM

©2025 Jensen Infrastructure - All rights reserved.
All materials appearing as Jensen Infrastructure documents and the like are proprietary work product and are protected under U.S. copyright and other laws. Unless in conjunction with business conducted with Jensen Infrastructure , any use of Jensen Infrastructure work product without express, written consent is prohibited, and recipient is prohibited from distributing any and all work product to non-approved third parties under penalty of civil action.
This product shall only be produced in a Jensen Infrastructure facility.

NAME & DESCRIPTION: 200105060
Name Plate Backing Plate, Interior, 6" Hole Space, End Tabs, Steel

REV: A-1

WEIGHT: 1.905 lbmass

DRAWN BY: C. Heywood

CREATED: 8/15/2025

MODIFIED: 12/18/2025

SHEET: 8 OF 14

100006596.idw

SYMMETRIC

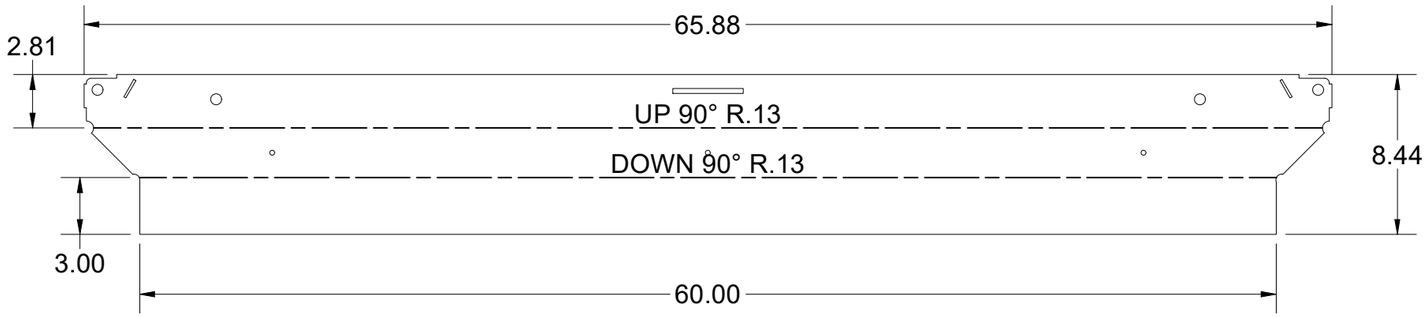

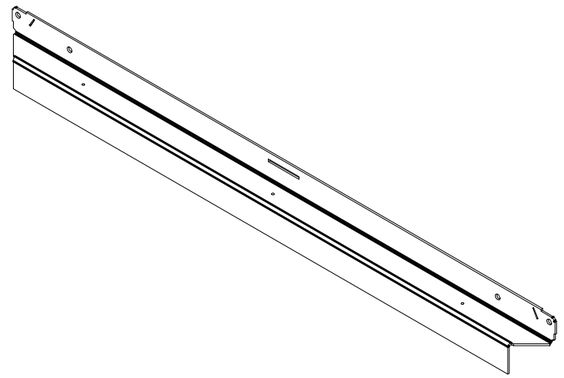

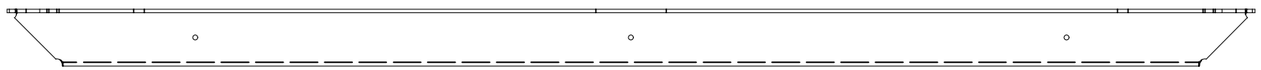

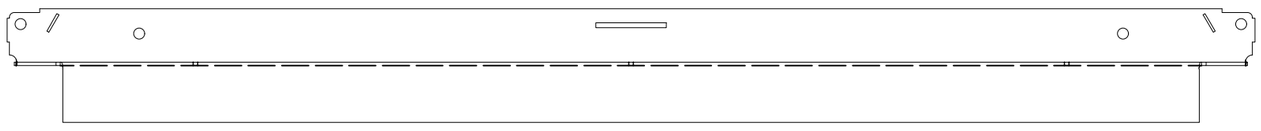

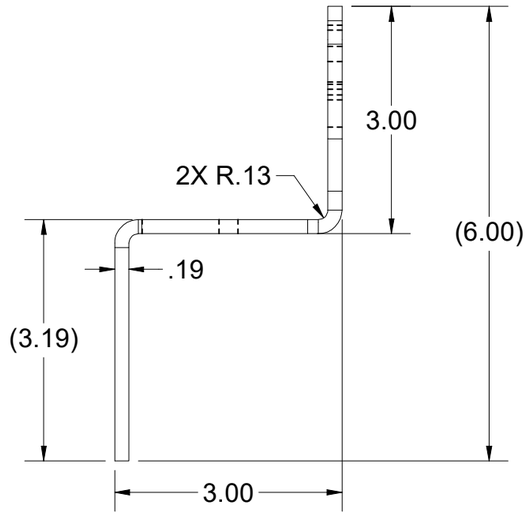

BEND TABLE				MATERIAL IFS: 100007734
BEND RADIUS	V-OPENING	BEND ANGLE	BEND DEDUCTION	MATERIAL THK: 0.1875
-	-	- 0	-	MAT DESCRIPTION: STL ASTM A36 SM-HRPO 60X120 RAW .1875

Infrastructure JENSEN
527 Dunn Circle, Sparks, NV 89431
775-352-2716 FAX: 755-358-8127
JENSENMETALTECH.COM

©2025 Jensen Infrastructure - All rights reserved. All materials appearing as Jensen Infrastructure documents and the like are proprietary work product and are protected under U.S. copyright and other laws. Unless in conjunction with business conducted with Jensen Infrastructure , any use of Jensen Infrastructure work product without express, written consent is prohibited, and recipient is prohibited from distributing any and all work product to non-approved third parties under penalty of civil action. This product shall only be produced in a Jensen Infrastructure facility.

NAME & DESCRIPTION: 200105113 Frame Component Steel Frame Side, Cast In		REV: A-1
WEIGHT: 28.636 lbmass	DRAWN BY: C. Heywood	SHEET: 9 OF 14
CREATED: 8/15/2025	MODIFIED: 12/18/2025	

100006596.idw

SYMMETRIC

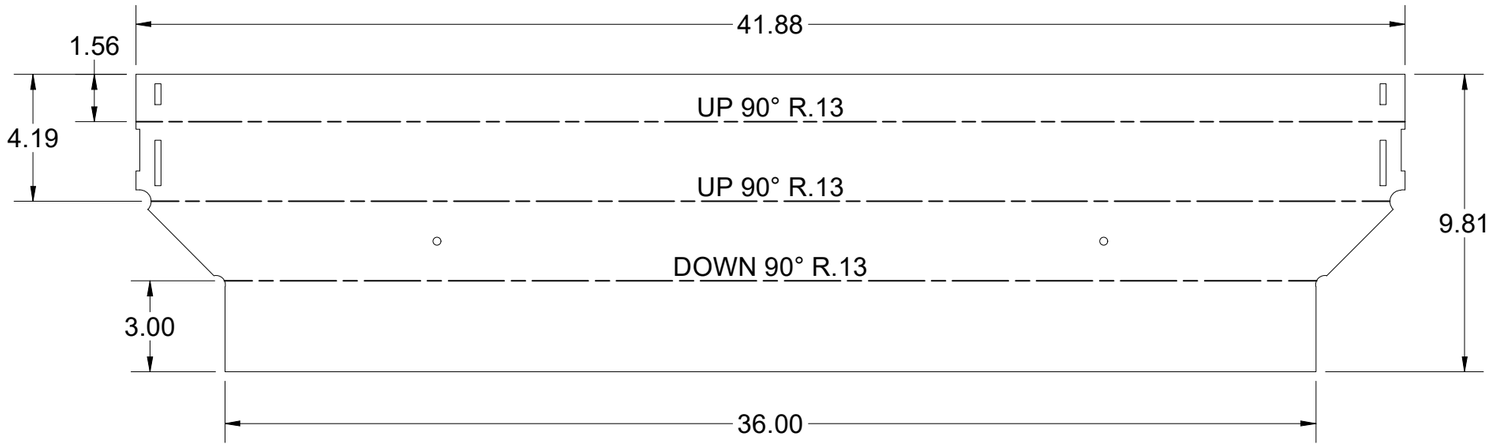

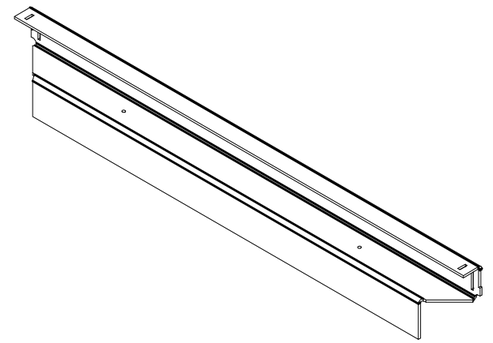

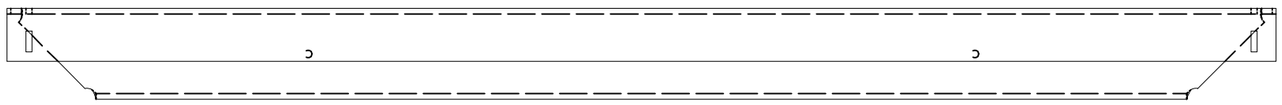

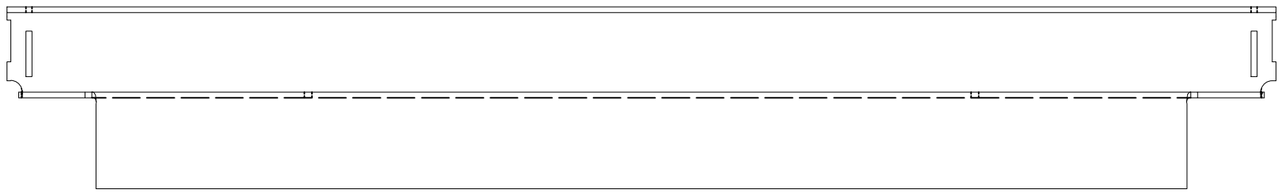

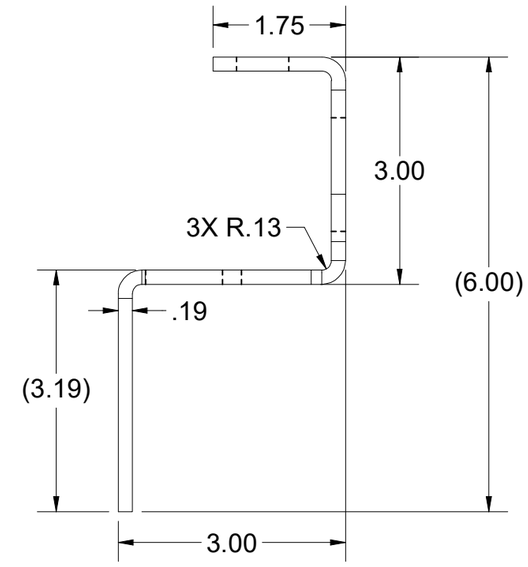

BEND TABLE			
BEND RADIUS	V-OPENING	BEND ANGLE	BEND DEDUCTION
-	-	- 0	-

MATERIAL IFS: 100007734

MATERIAL THK: 0.1875

MAT DESCRIPTION: STL ASTM A36 SM-HRPO 60X120 RAW .1875

Infrastructure JENSEN

527 Dunn Circle, Sparks, NV 89431
775-352-2716 FAX: 755-358-8127
JENSENMETALTECH.COM

©2025 Jensen Infrastructure - All rights reserved.
All materials appearing as Jensen Infrastructure documents and the like are proprietary work product and are protected under U.S. copyright and other laws. Unless in conjunction with business conducted with Jensen Infrastructure , any use of Jensen Infrastructure work product without express, written consent is prohibited, and recipient is prohibited from distributing any and all work product to non-approved third parties under penalty of civil action.
This product shall only be produced in a Jensen Infrastructure facility.

NAME & DESCRIPTION: 200105115
Frame Component Steel Frame End, Cast In

REV: A-1

WEIGHT: 21.007 lbmass

DRAWN BY: C. Heywood

CREATED: 8/15/2025

MODIFIED: 12/18/2025

SHEET: 10 OF 14

100006596.idw

ASYMMETRIC

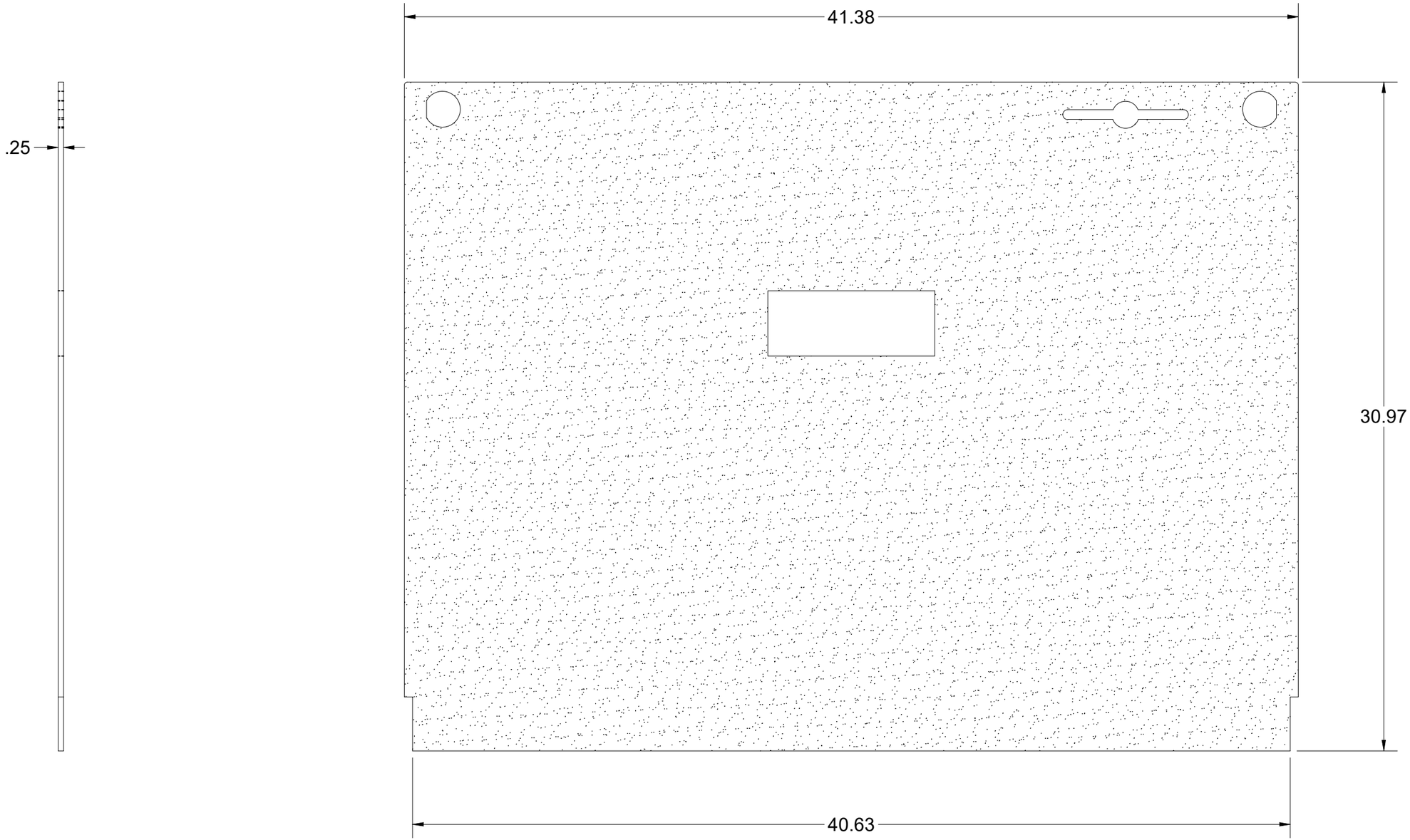

BEND TABLE			
BEND RADIUS	V-OPENING	BEND ANGLE	BEND DEDUCTION
-	-	- 0	-

MATERIAL IFS: 100007735

MATERIAL THK: 0.25

MAT DESCRIPTION: STL ASTM A36 SM-HRPO RAW .250

Infrastructure JENSEN

527 Dunn Circle, Sparks, NV 89431
775-352-2716 FAX: 755-358-8127
JENSENMETALTECH.COM

©2025 Jensen Infrastructure - All rights reserved.
All materials appearing as Jensen Infrastructure documents and the like are proprietary work product and are protected under U.S. copyright and other laws. Unless in conjunction with business conducted with Jensen Infrastructure , any use of Jensen Infrastructure work product without express, written consent is prohibited, and recipient is prohibited from distributing any and all work product to non-approved third parties under penalty of civil action.
This product shall only be produced in a Jensen Infrastructure facility.

NAME & DESCRIPTION: 200105130
Door Component Steel Plate, Top Nameplate

REV: A-1

WEIGHT: 88.650 lbmass

DRAWN BY: C. Heywood

CREATED: 8/15/2025

MODIFIED: 12/18/2025

SHEET: 11 OF 14

100006596.idw

ASYMMETRIC

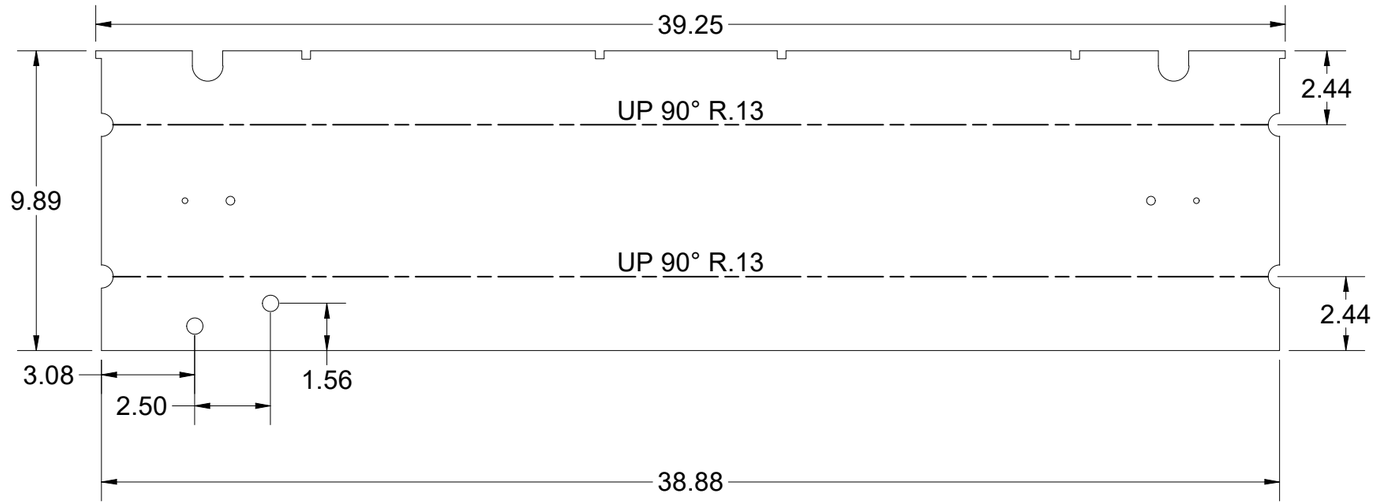

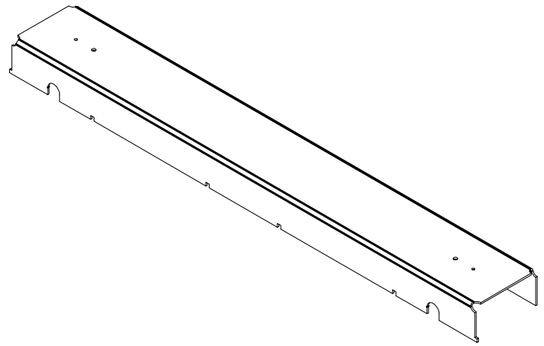





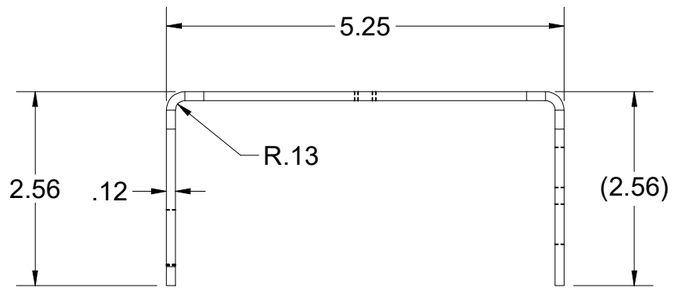

BEND TABLE			
BEND RADIUS	V-OPENING	BEND ANGLE	BEND DEDUCTION
-	-	- 0	-

MATERIAL IFS: 100007840

MATERIAL THK: 0.1196

MAT DESCRIPTION: SHT STL GR80 GA-11 SM-HR RAW .1196

Infrastructure JENSEN

527 Dunn Circle, Sparks, NV 89431
775-352-2716 FAX: 755-358-8127
JENSENMETALTECH.COM

©2025 Jensen Infrastructure - All rights reserved. All materials appearing as Jensen Infrastructure documents and the like are proprietary work product and are protected under U.S. copyright and other laws. Unless in conjunction with business conducted with Jensen Infrastructure , any use of Jensen Infrastructure work product without express, written consent is prohibited, and recipient is prohibited from distributing any and all work product to non-approved third parties under penalty of civil action. This product shall only be produced in a Jensen Infrastructure facility.

NAME & DESCRIPTION: 200105132
Door Component Steel Channel Nameplate

REV: A-1

WEIGHT: 13.035 lbmass

DRAWN BY: C. Heywood

CREATED: 8/15/2025

MODIFIED: 12/18/2025

SHEET: 12 OF 14

100006596.idw

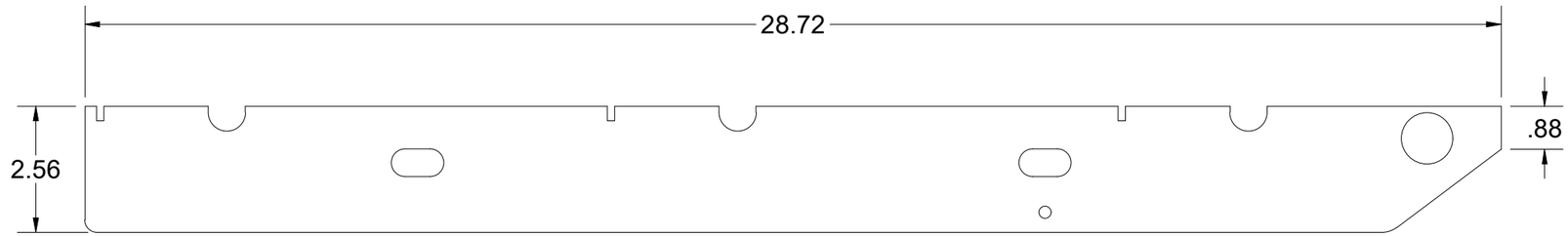

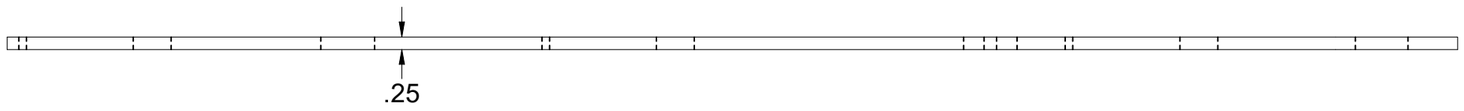

BEND TABLE				MATERIAL IFS: 100007735
BEND RADIUS	V-OPENING	BEND ANGLE	BEND DEDUCTION	MATERIAL THK: 0.25
-	-	- 0	-	MAT DESCRIPTION: STL ASTM A36 SM-HRPO RAW .250

Infrastructure
JENSEN
527 Dunn Circle, Sparks, NV 89431
775-352-2716 FAX: 755-358-8127
JENSENMETALTECH.COM

©2025 Jensen Infrastructure - All rights reserved.
All materials appearing as Jensen Infrastructure documents and the like are proprietary work product and are protected under U.S. copyright and other laws. Unless in conjunction with business conducted with Jensen Infrastructure , any use of Jensen Infrastructure work product without express, written consent is prohibited, and recipient is prohibited from distributing any and all work product to non-approved third parties under penalty of civil action.
This product shall only be produced in a Jensen Infrastructure facility.

NAME & DESCRIPTION: 200105140 Door Component Steel Side Bar		REV: A-1
WEIGHT: 4.873 lbmass	DRAWN BY: C. Heywood	SHEET: 13 OF 14
CREATED: 8/15/2025	MODIFIED: 12/18/2025	

100006596.idw

ASYMMETRIC

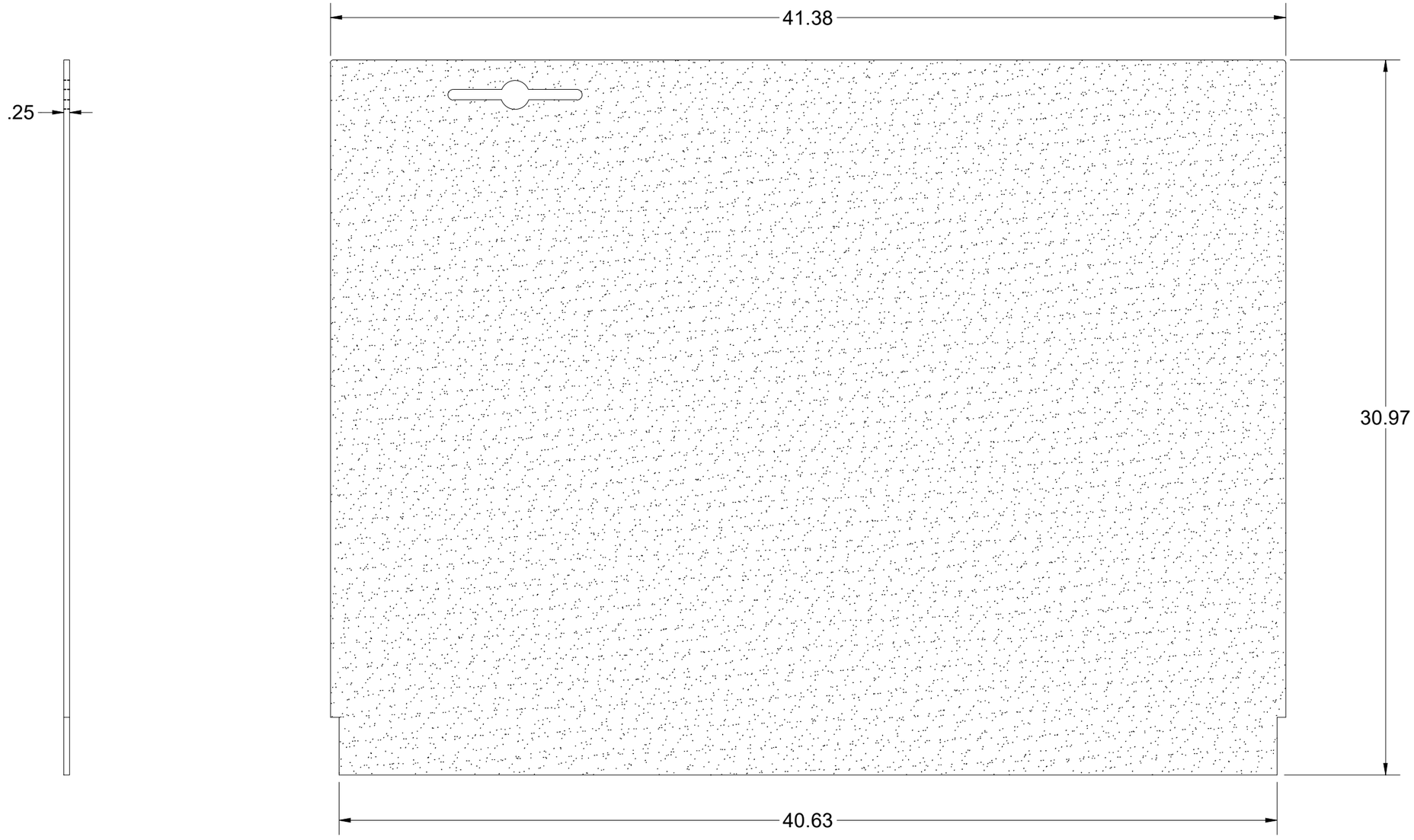

100006596.idw

BEND TABLE			
BEND RADIUS	V-OPENING	BEND ANGLE	BEND DEDUCTION
-	-	- 0	-

MATERIAL IFS: 100007735

MATERIAL THK: 0.25

MAT DESCRIPTION: STL ASTM A36 SM-HRPO RAW .250

Infrastructure JENSEN

527 Dunn Circle, Sparks, NV 89431
775-352-2716 FAX: 755-358-8127
JENSENMETALTECH.COM

©2025 Jensen Infrastructure - All rights reserved. All materials appearing as Jensen Infrastructure documents and the like are proprietary work product and are protected under U.S. copyright and other laws. Unless in conjunction with business conducted with Jensen Infrastructure , any use of Jensen Infrastructure work product without express, written consent is prohibited, and recipient is prohibited from distributing any and all work product to non-approved third parties under penalty of civil action. This product shall only be produced in a Jensen Infrastructure facility.

NAME & DESCRIPTION: 200105142 Door Component Steel Plate, Bottom

REV: A-1

WEIGHT: 90.611 lbmass

DRAWN BY: C. Heywood

CREATED: 8/15/2025

MODIFIED: 12/18/2025

SHEET: 14 OF 14