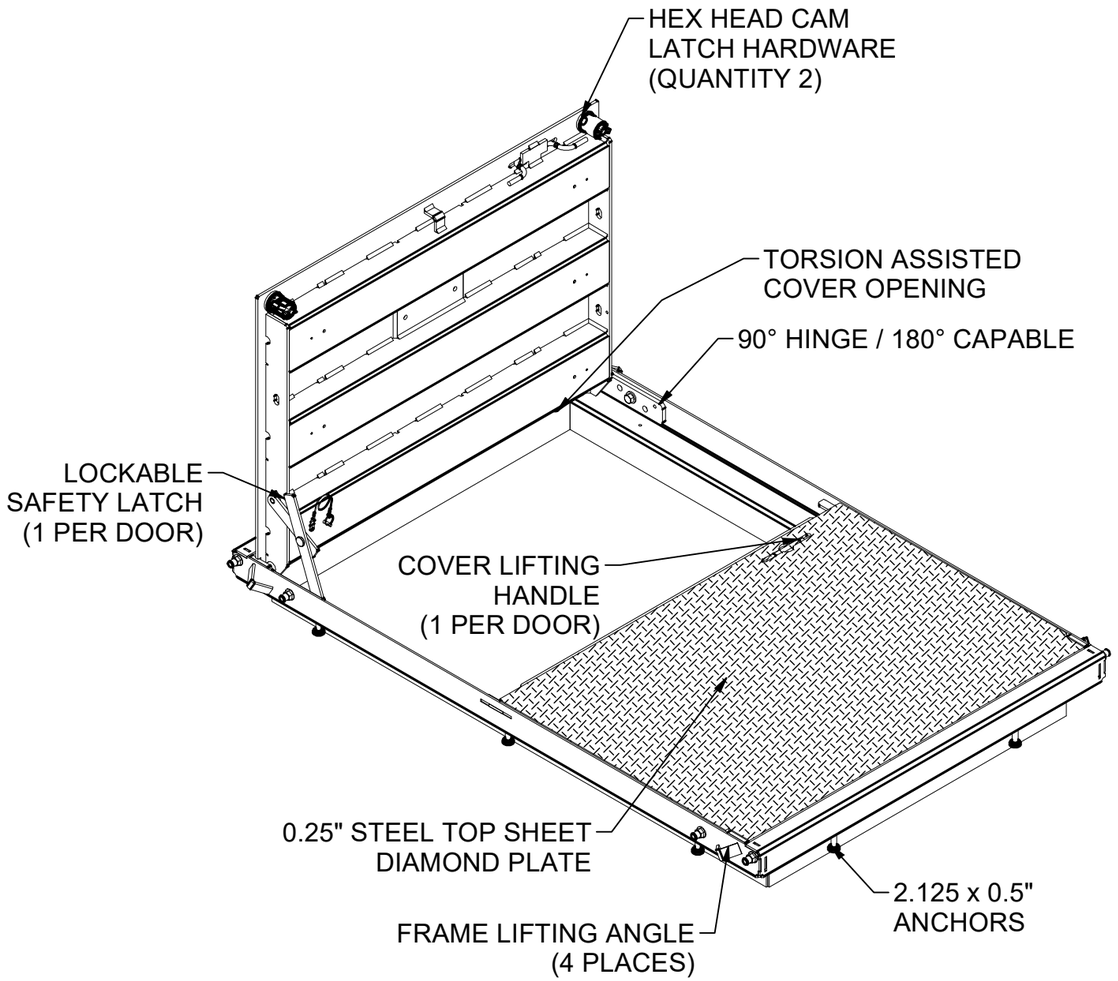

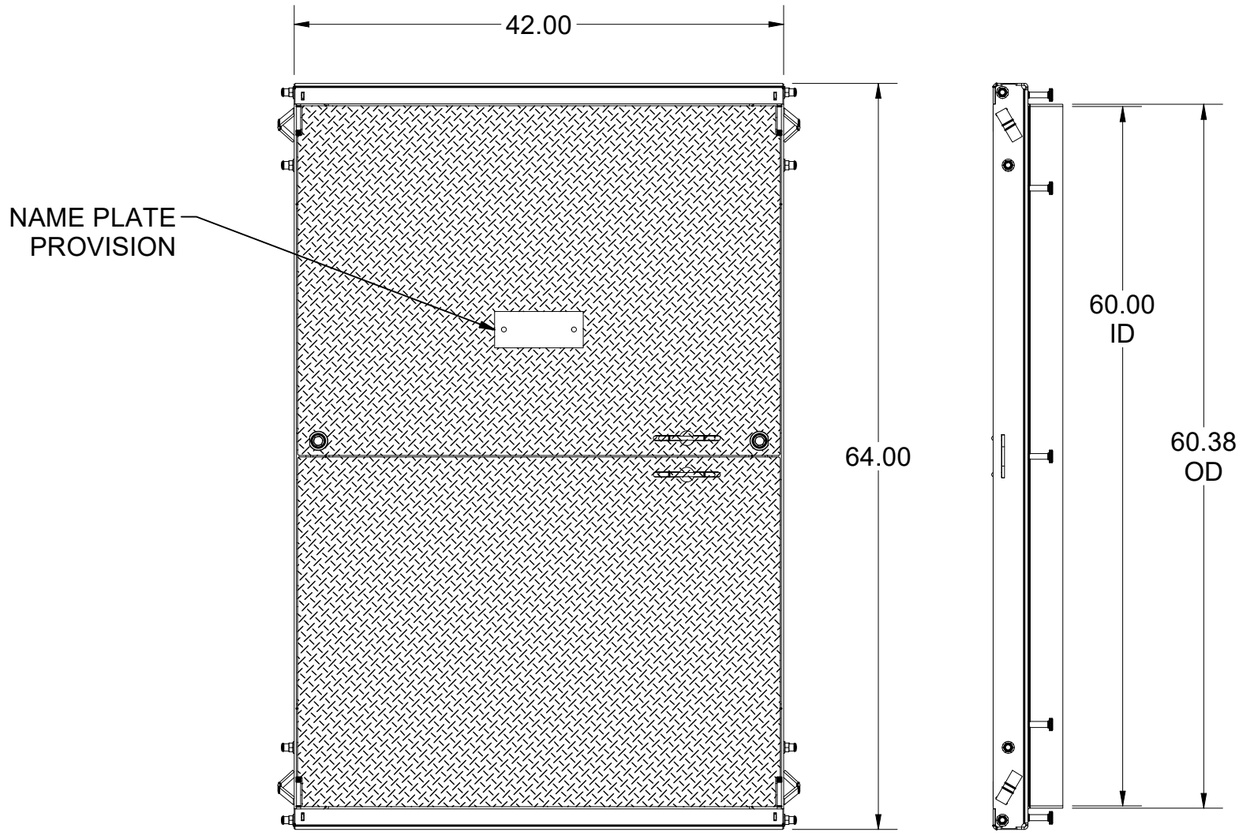

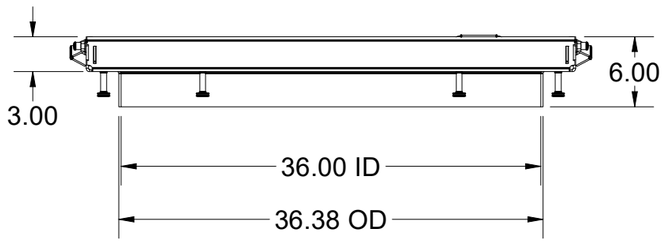

100006595.idw

ROBOT DOOR

LOADING CRITERIA: ASTM C1802 Load Level 04

16,000 lb load on 10" x 20" footprint, without impact restricted to parking spaces and areas within close proximity of roadways.

SURFACE:	Diamond Plate	FINISH:	Galvanized
WEIGHT:	418.08 lbs	MARKING:	None

Infrastructure
JENSEN
527 Dunn Circle, Sparks, NV 89431
775-352-2716 FAX: 755-358-8127
JENSENMETALTECH.COM

©2026 Jensen Infrastructure - All rights reserved.
All materials appearing as Jensen Infrastructure documents and the like are proprietary work product and are protected under U.S. copyright and other laws. Unless in conjunction with business conducted with Jensen Infrastructure , any use of Jensen Infrastructure work product without express, written consent is prohibited, and recipient is prohibited from distributing any and all work product to non-approved third parties under penalty of civil action.
This product shall only be produced in a Jensen Infrastructure facility.

DESCRIPTION:	CAS2-3660-CH4-DP-G-CL-FONT-OH06-10-30-35THG 36x60 Standard Cover Assembly (Loading Criteria Per ASTM C1802 Load Level 04, Steel, Hinged, Handle (1 Per Door), Diamond Plate, Galvanized, N/A, N/A 10-30-35THG) 06		
PART NUMBER:	100006595	DRAWN BY:	R. Dohr
CREATED:	12/3/2019	MODIFIED:	1/7/2026

REV:	B-4
SHEET:	1

BILL OF MATERIALS

ITEM	ITEM QTY	QTY	PART NUMBER	DESCRIPTION	PART NAME
1	1	1	200032899	FAS-3660-CH4-R-FONT-OH06	200032899
2	1	1	200032891	DAS2-B-3660-H4-DP-R-CL-FONT	200032891
3	1	1	200032897	DAS2-T-3660-H4-DP-R-CL-FONT	200032897
4	8	8	100026256	LOW-STRENGTH STEEL FLANGE NUT, 1/2" - 13 THREAD SIZE	100026256
5	8	8	100011418	WASHER FLAT 1/2 NARROW ZINC	100011418
6	2	2	100011407	Hex Bolt 1/2-13 UNC ZINC - PT - 2.25"	100011407
7	8	8	100007939	CAP VINYL .467 X 1/2	100007939
8	2	2	100007924	LANYARD 3/64 W/PIN COATED SS	100007924
9	2	2	100007918	Cotter Pin 0.094x1.25" 18-8SS	100007918
10	2	2	100007915	SPRING COMPRESSION 055 X 5/8 X 7/8 LONG	100007915
11	2	2	100007882	Rivet Blind Grip .1875" Large Domed Head Range-0.376-0.5" Steel	100007882
12	2	2	100007876	Bolt Shoulder Socket Head - 3/8-16 UNC - SD-0.5" - SL-0.3125" - Grade 5 - Zinc	100007876
13	4	4	100007859	RIVET NUT 3/8-16 FLAT KNURLED	100007859
14	2	2	100007857	NUT FINGER 1/2-13 BRASS	100007857
15	2	2	100007729	HEX NUT SLOTTED CASTLE HEAD 1/2-13 SS	100007729
16	2	2	100007727	TORSION HEX ROD 1/2 X 36 RAW	100007727
17	2	2	100007671	SPRING MOUNT ASSY .500	100007671
18	2	2	100007666	Hinge Assembly, Right, Steel	100007666
19	2	2	100007659	Hinge Assembly, Left, 1/2, Steel	100007659
20	2	2	100007492	HEX NUT NYLOCK - 1/2-13 UNC - GR5 - ZINC	100007492
21	4	4	100003823	Hex Bolt 1/2-13 UNC ZINC - PT - 1.5"	100003823
22	2	2	100007933	SAFETY LATCH ASSY FOR UNI AND 90 D HINGE	100007933
23	4	4	100007869	BOLT SOCKET CAP - 1/2-13 UNC - 1.75 - 316SS	100007869
24	4	4	100007873	BOLT SOCKET CAP - 3/8-16 UNC - 1.25 - ZINC	100007873

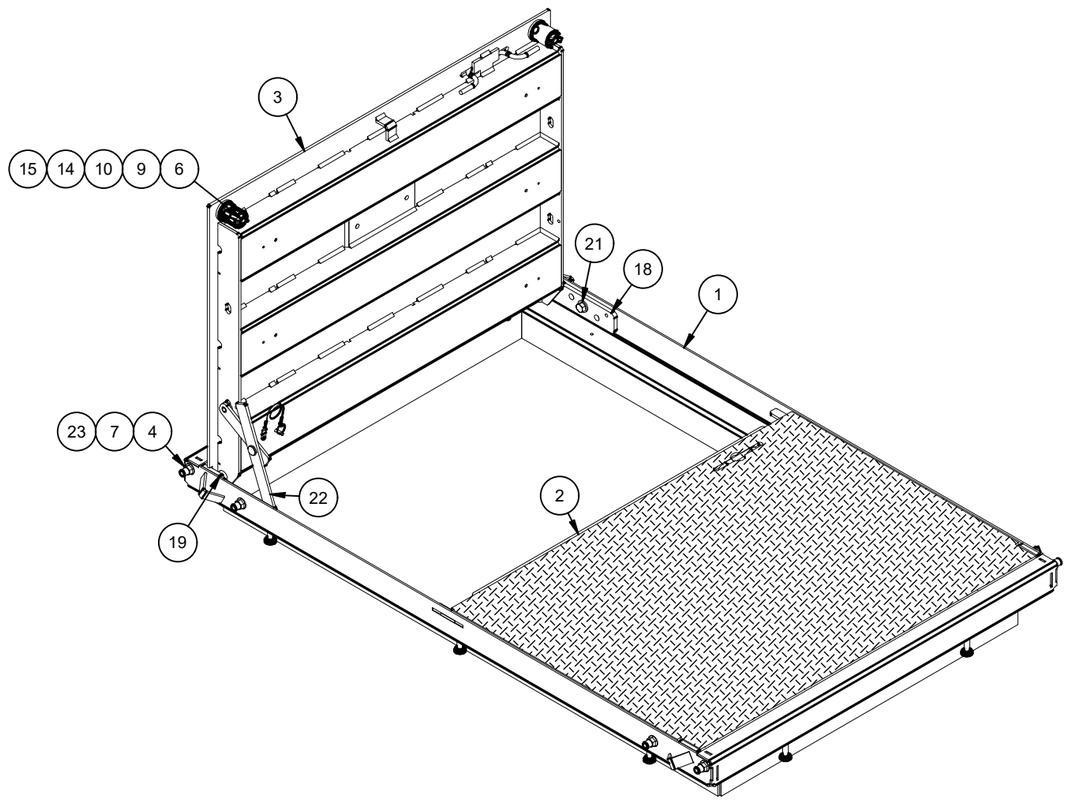

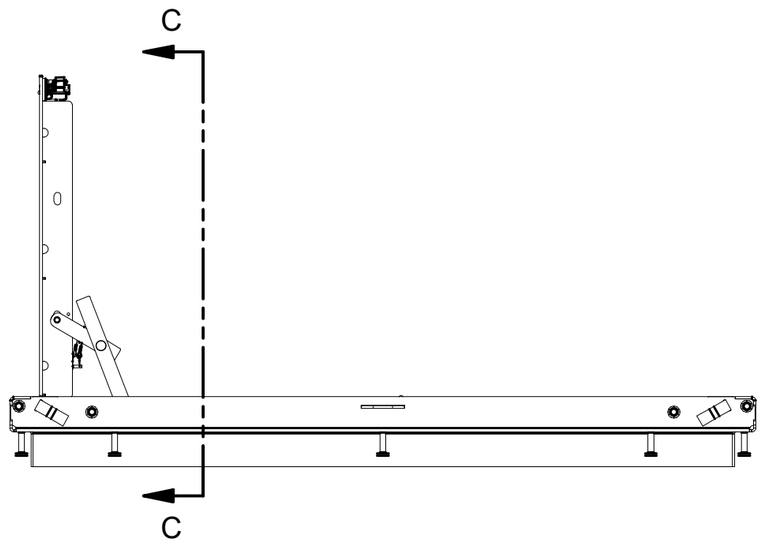

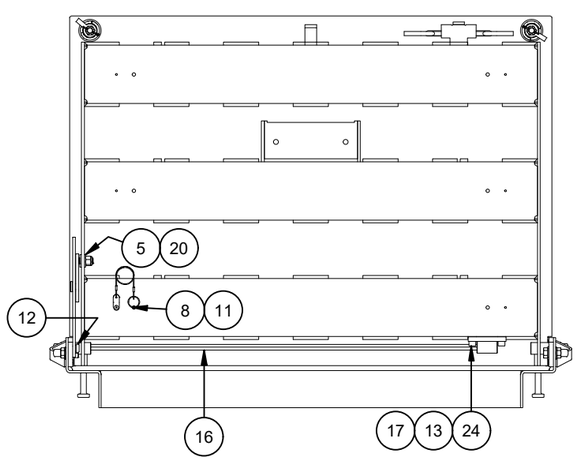

100006595.idw

REVISION HISTORY		
DESCRIPTION	DATE	REVISED BY
ECR 56995-1 UPDATED WELD CALLOUTS	5/20/2024	
58027-6 UPDATED LAP BAR/HANDLE RETAINER CUTOUTS IN STIFFENERS. SWAPPED HANDLE SIDE.	4/23/25	
57473-5: CHANGED BENT CHANNEL TO 2 INCH V OPENING. UPDATED BEND TABLE ACCORDINGLY.	7/08/2025	COLLIN HEYWOOD
REVISED WELDS TO MATCH EXISTING ROBOT DOOR PROGRAM. SWAPPED HANDLE SIDE FOR SAME REASON	1/7/2026	R. DOHR

MATERIAL FINISH: Galvanized

MATERIAL SURFACE: Diamond Plate

Infrastructure JENSEN

527 Dunn Circle, Sparks, NV 89431
775-352-2716 FAX: 755-358-8127
JENSENMETALTECH.COM

©2026 Jensen Infrastructure - All rights reserved. All materials appearing as Jensen Infrastructure documents and the like are proprietary work product and are protected under U.S. copyright and other laws. Unless in conjunction with business conducted with Jensen Infrastructure , any use of Jensen Infrastructure work product without express, written consent is prohibited, and recipient is prohibited from distributing any and all work product to non-approved third parties under penalty of civil action. This product shall only be produced in a Jensen Infrastructure facility.

PART NUMBER & DESCRIPTION: 100006595 CAS2-3660-CH4-DP-G-CL-FONT-OH06-10-30-35THG

REV: B-4

WEIGHT: 418.08 Lbs

DRAWN BY: R. Dohr

SHEET: 2

CREATED: 12/3/2019

MODIFIED: 1/7/2026

BURN LIST - BOM

PART NAME	ITEM QTY	QTY	DESCRIPTION	STOCK NUMBER	MATERIAL	MASS	SHEET
200032893	1	96.665 lbmass	Door Component Steel Plate, Bottom	100007736	SHT STL CQ DP RAW .25 - 36 KSI YIELD	96.665 lbmass	07
200032894	4	18.735 lbmass	Door Component Steel Side Bar	100007735	STL ASTM A36 SM-HRPO RAW .250	4.683 lbmass	08
200032896	6	76.670 lbmass	Door Component Steel Channel	100007840	SHT STL GR80 GA-11 SM-HR RAW .1196	12.778 lbmass	09
200032898	1	94.467 lbmass	Door Component Steel Plate, Top Nameplate	100007736	SHT STL CQ DP RAW .25 - 36 KSI YIELD	94.467 lbmass	10
200032900	2	37.892 lbmass	Frame Component Steel Frame End, Cast In	100007734	STL ASTM A36 SM-HRPO 60X120 RAW .1875	18.940 lbmass	11
200032901	2	56.350 lbmass	Frame Component Steel Frame Side, Cast In	100007734	STL ASTM A36 SM-HRPO 60X120 RAW .1875	28.175 lbmass	12
200087246	1	4.842 lbmass	Door Component Steel Lap Bar 36in, 2.5" Stiffener Offset	100007735	STL ASTM A36 SM-HRPO RAW .250	4.842 lbmass	13
200088891	1	1.910 lbmass	NAME PLATE BACKING PLATE	100007735	STL ASTM A36 SM-HRPO RAW .250	1.910 lbmass	14

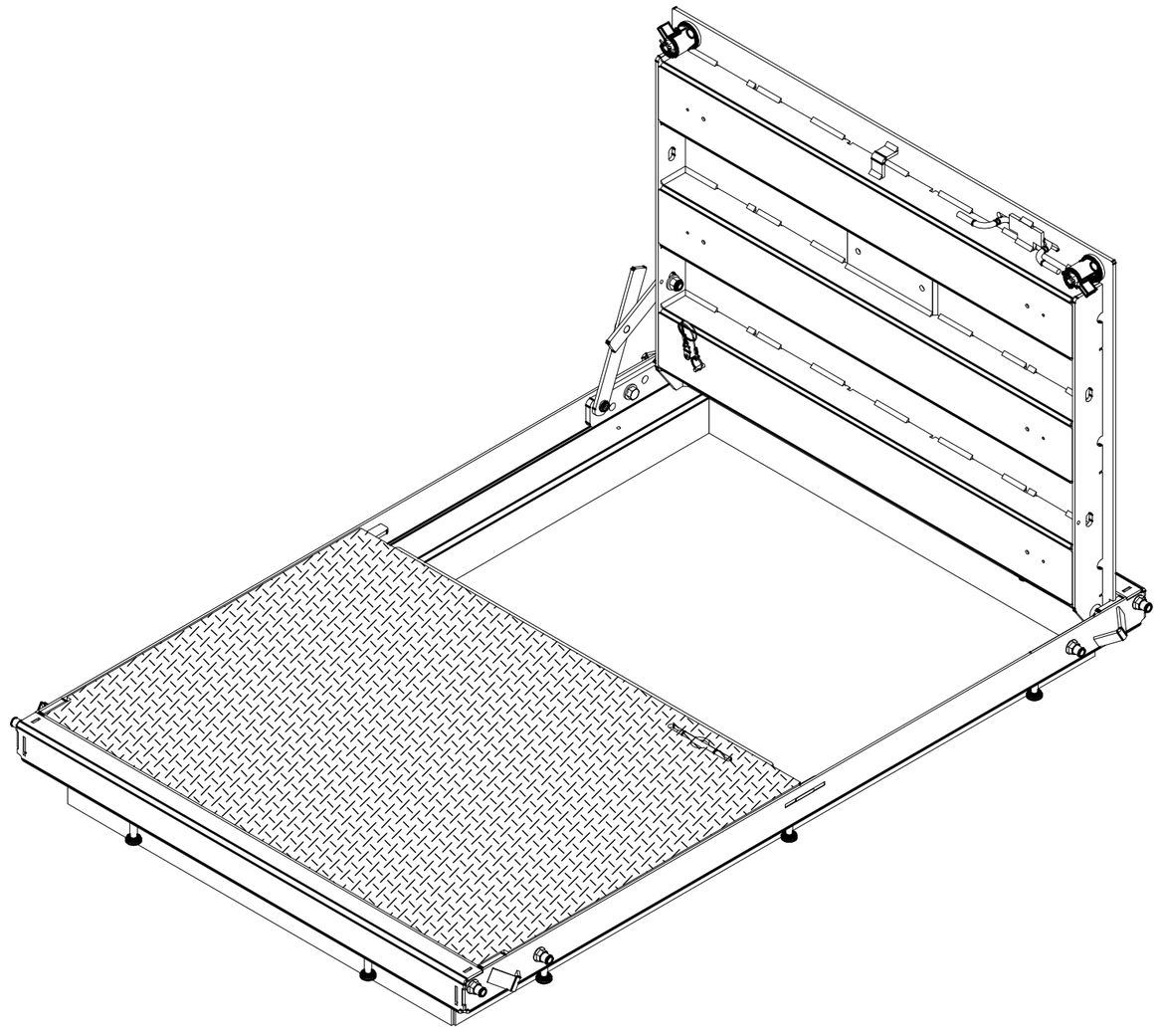

100006595.idw

MATERIAL FINISH: Galvanized

MATERIAL SURFACE: Diamond Plate

Infrastructure
JENSEN
527 Dunn Circle, Sparks, NV 89431
775-352-2716 FAX: 755-358-8127
JENSENMETALTECH.COM

©2026 Jensen Infrastructure - All rights reserved.
All materials appearing as Jensen Infrastructure documents and the like are proprietary work product and are protected under U.S. copyright and other laws. Unless in conjunction with business conducted with Jensen Infrastructure , any use of Jensen Infrastructure work product without express, written consent is prohibited, and recipient is prohibited from distributing any and all work product to non-approved third parties under penalty of civil action.
This product shall only be produced in a Jensen Infrastructure facility.

PART NUMBER & DESCRIPTION: 100006595
CAS2-3660-CH4-DP-G-CL-FONT-OH06-10-30-35THG

REV: B-4

WEIGHT: 418.08 Lbs

DRAWN BY: R. Dohr

CREATED: 12/3/2019

MODIFIED: 1/7/2026

SHEET: 3

BILL OF MATERIALS

ITEM	ITEM QTY	QTY	PART NUMBER	DESCRIPTION	PART NAME
1	1	94.467 lbmass	100007736	Door Component Steel Plate, Top Nameplate	200032898
2	2	9.367 lbmass	100007735	Door Component Steel Side Bar	200032894
3	3	38.335 lbmass	100007840	Door Component Steel Channel	200032896
4	1	1.910 lbmass	100007735	NAME PLATE BACKING PLATE	200088891
5	1	1	100007644	LEAF PULL HANDLE A36 3/8IN DIAMETER	100007644
6	1	1	100007647	LIFTING BRACKET STEEL LEAF	100007647
7	1	1	100007646	HANDLE RETAINER STL	100007646
8	2	2	100007970	CAM TOWER CAST STEEL	100007970

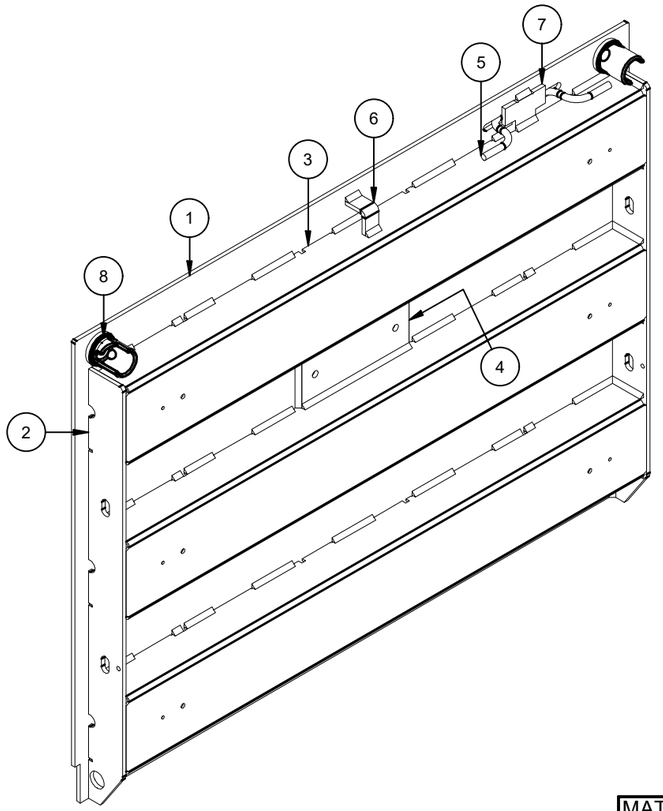

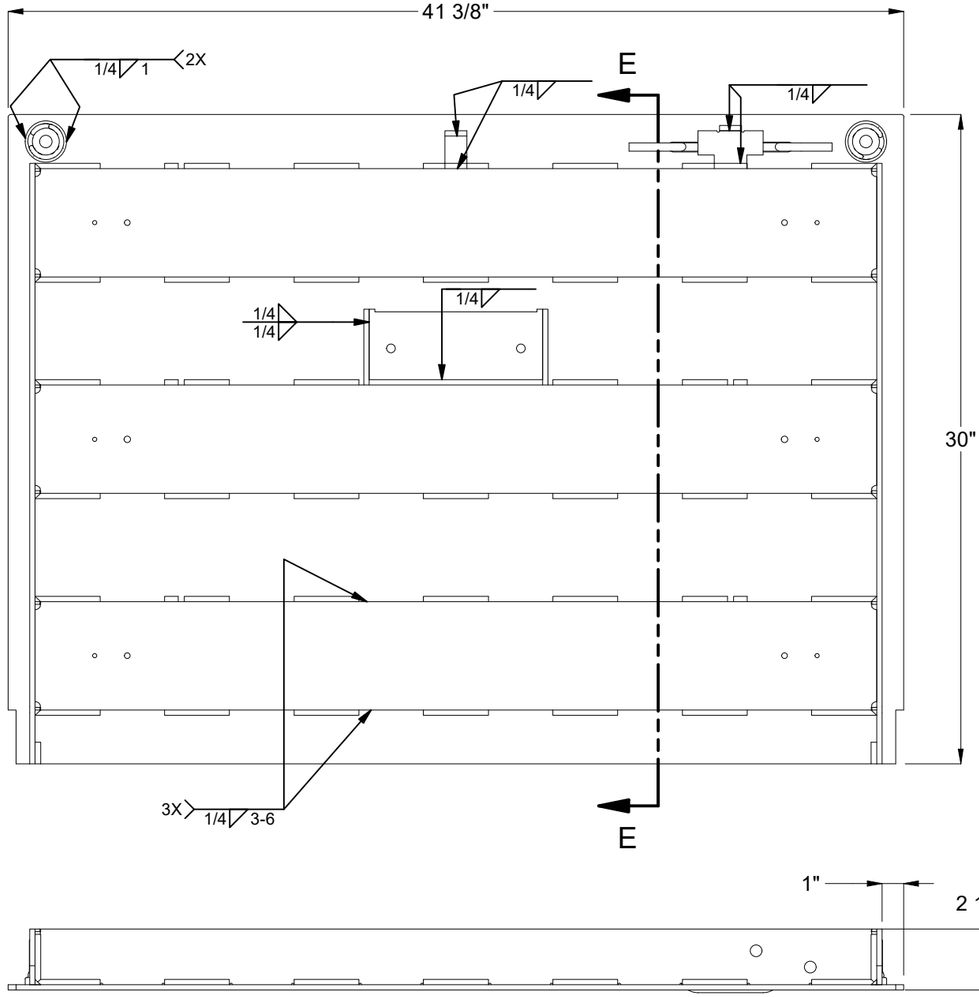

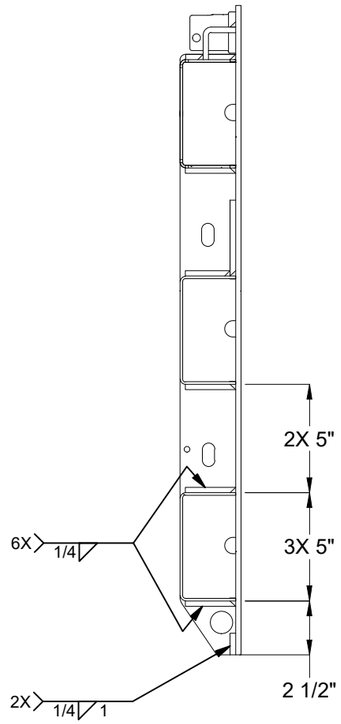

SECTION E-E

MATERIAL FINISH: Raw	Infrastructure JENSEN 527 Dunn Circle, Sparks, NV 89431 775-352-2716 FAX: 755-358-8127 *JENSENMETALTECH.COM*	©2026 Jensen Infrastructure - All rights reserved. All materials appearing as Jensen Infrastructure documents and the like are proprietary work product and are protected under U.S. copyright and other laws. Unless in conjunction with business conducted with Jensen Infrastructure , any use of Jensen Infrastructure work product without express, written consent is prohibited, and recipient is prohibited from distributing any and all work product to non-approved third parties under penalty of civil action. This product shall only be produced in a Jensen Infrastructure facility.	PART NUMBER & DESCRIPTION: 200032897 DAS2-T-3660-H4-DP-R-CL-FONT	REV: B-4
MATERIAL SURFACE: Diamond Plate			WEIGHT: 147.34 Lbs CREATED: 12/3/2019	DRAWN BY: R. Dohr MODIFIED: 1/7/2026	SHEET: 4

100006595.idw

BILL OF MATERIALS

ITEM	ITEM QTY	QTY	PART NUMBER	DESCRIPTION	PART NAME
1	1	96.665 lbmass	100007736	Door Component Steel Plate, Bottom	200032893
2	3	38.335 lbmass	100007840	Door Component Steel Channel	200032896
3	2	9.367 lbmass	100007735	Door Component Steel Side Bar	200032894
4	1	4.842 lbmass	100007735	Door Component Steel Lap Bar 36in, 2.5" Stiffener Offset	200087246
5	1	1	100007644	LEAF PULL HANDLE A36 3/8IN DIAMETER	100007644
6	1	1	100007647	LIFTING BRACKET STEEL LEAF	100007647

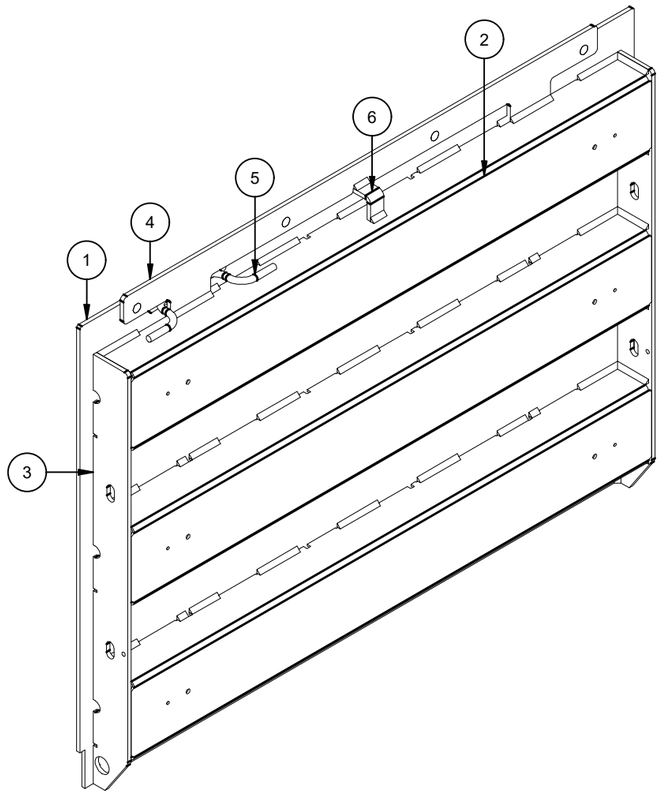

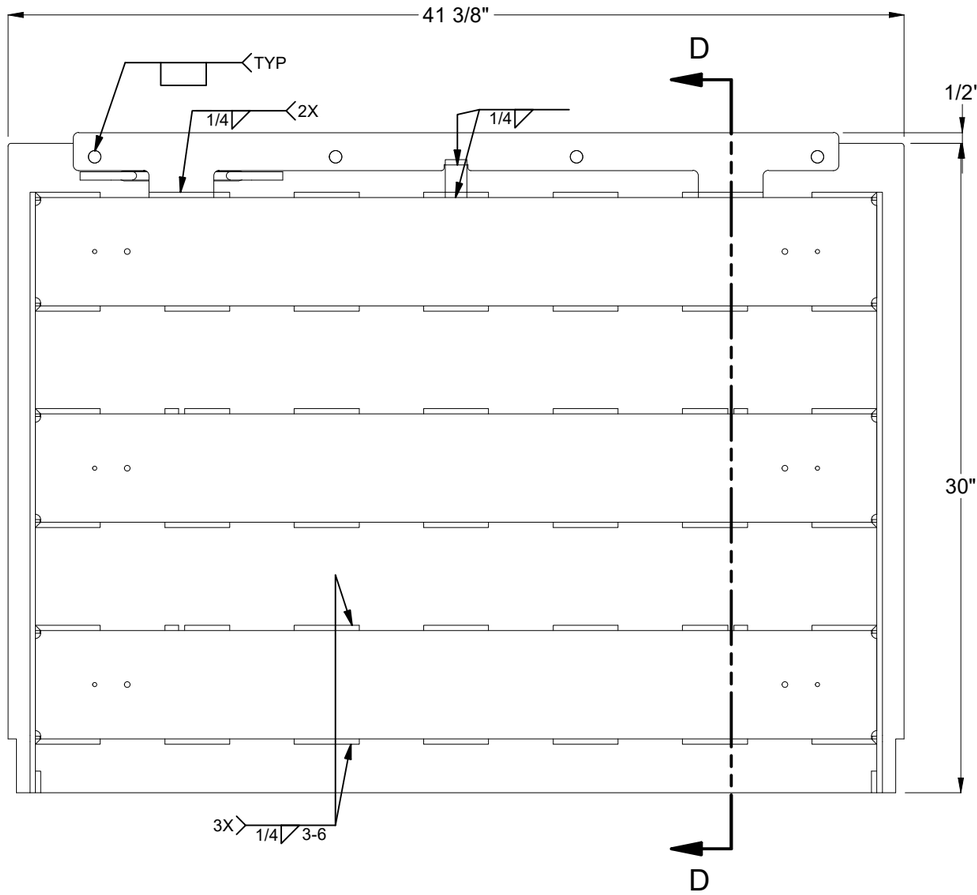

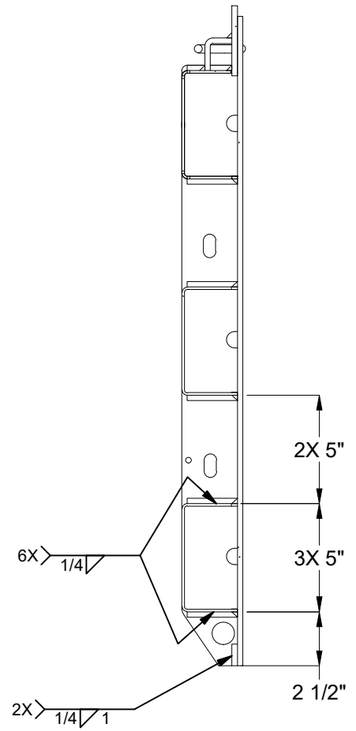

SECTION D-D

MATERIAL FINISH: Raw	Infrastructure JENSEN 527 Dunn Circle, Sparks, NV 89431 775-352-2716 FAX: 755-358-8127 *JENSENMETALTECH.COM*	©2026 Jensen Infrastructure - All rights reserved. All materials appearing as Jensen Infrastructure documents and the like are proprietary work product and are protected under U.S. copyright and other laws. Unless in conjunction with business conducted with Jensen Infrastructure , any use of Jensen Infrastructure work product without express, written consent is prohibited, and recipient is prohibited from distributing any and all work product to non-approved third parties under penalty of civil action. This product shall only be produced in a Jensen Infrastructure facility.	PART NUMBER & DESCRIPTION: 200032891 DAS2-B-3660-H4-DP-R-CL-FONT
MATERIAL SURFACE: Diamond Plate			WEIGHT: 150.93 Lbs / DRAWN BY: R. Dohr / CREATED: 12/3/2019 / MODIFIED: 1/7/2026

REV: B-4

SHEET: 5

100006595.idw

BILL OF MATERIALS

ITEM	ITEM QTY	QTY	PART NUMBER	DESCRIPTION	PART NAME
1	2	56.350 lbmass	100007734	Frame Component Steel Frame Side, Cast In	200032901
2	2	37.892 lbmass	100007734	Frame Component Steel Frame End, Cast In	200032900
3	4	4	200018691	FRAME BOLT DOUBLER SLOT	200018691
4	2	2	200100755	Frame Cam Latch Catch Plate - 1/4" A36, Dual Door, 0.8125" Overhang	200100755
5	4	4	100007641	FRAME LIFTING BRACKET	100007641
6	10	10	100007889	STUD NELSON WELD H4L-HEADED A36 1/2X2-1/8	100007889

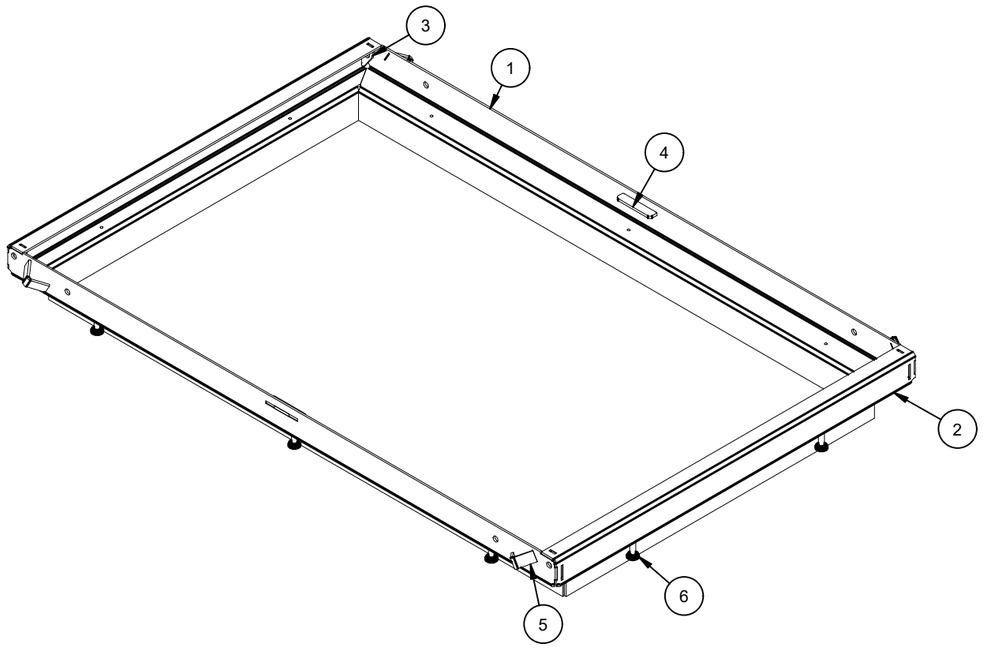

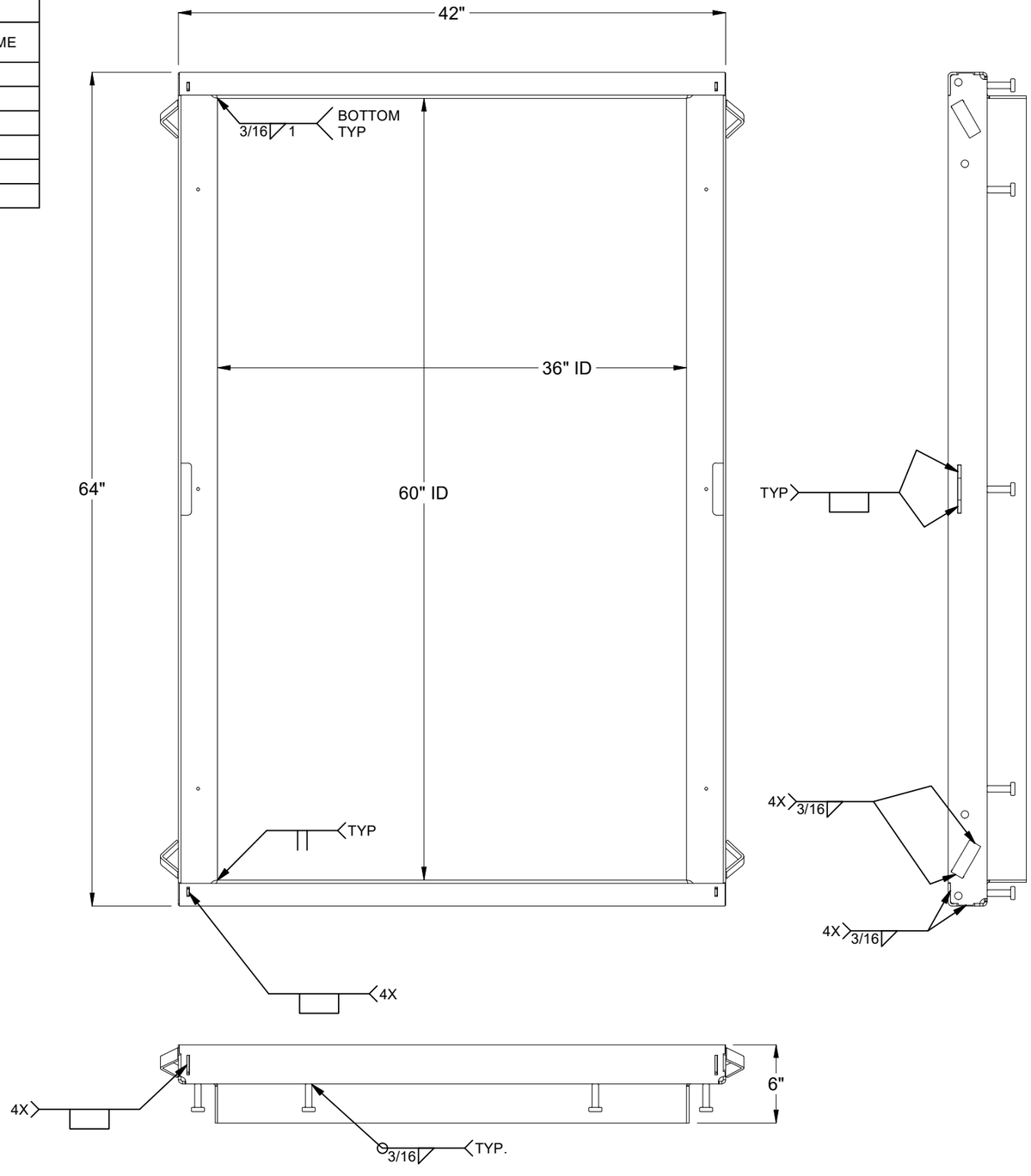

100006595.idw

MATERIAL FINISH: Raw	Infrastructure JENSEN 527 Dunn Circle, Sparks, NV 89431 775-352-2716 FAX: 755-358-8127 *JENSENMETALTECH.COM*	©2026 Jensen Infrastructure - All rights reserved. All materials appearing as Jensen Infrastructure documents and the like are proprietary work product and are protected under U.S. copyright and other laws. Unless in conjunction with business conducted with Jensen Infrastructure , any use of Jensen Infrastructure work product without express, written consent is prohibited, and recipient is prohibited from distributing any and all work product to non-approved third parties under penalty of civil action. This product shall only be produced in a Jensen Infrastructure facility.	PART NUMBER & DESCRIPTION: 200032899 FAS-3660-CH4-R-FONT-OH06 — REV: B-4
MATERIAL SURFACE: Smooth			WEIGHT: 97.49 Lbs — DRAWN BY: R. Dohr — SHEET: 6
			CREATED: 12/3/2019 — MODIFIED: 1/7/2026

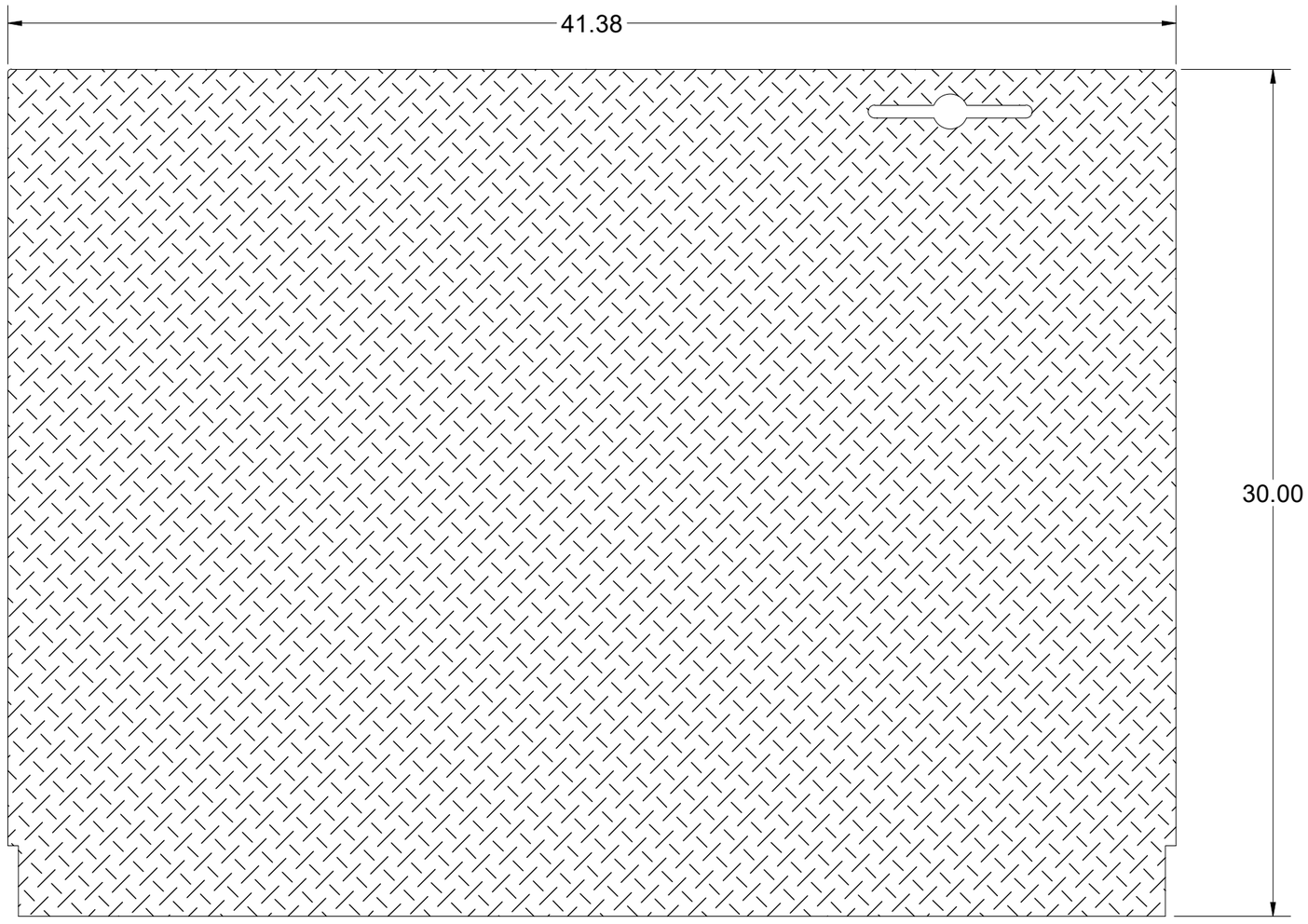

100006595.idw

BEND TABLE				MATERIAL IFS: 100007736
BEND RADIUS	V-OPENING	BEND ANGLE	BEND DEDUCTION	MATERIAL THK: 0.25
-	-	- 0	-	MAT DESCRIPTION: SHT STL CQ DP RAW .25 - 36 KSI YIELD

Infrastructure
JENSEN
527 Dunn Circle, Sparks, NV 89431
775-352-2716 FAX: 755-358-8127
JENSENMETALTECH.COM

©2026 Jensen Infrastructure - All rights reserved.
All materials appearing as Jensen Infrastructure documents and the like are proprietary work product and are protected under U.S. copyright and other laws. Unless in conjunction with business conducted with Jensen Infrastructure , any use of Jensen Infrastructure work product without express, written consent is prohibited, and recipient is prohibited from distributing any and all work product to non-approved third parties under penalty of civil action.
This product shall only be produced in a Jensen Infrastructure facility.

NAME & DESCRIPTION:	200032893 Door Component Steel Plate, Bottom	REV: B-4
WEIGHT: 96.665 lbmass	DRAWN BY: R. Dohr	SHEET: 7 OF 14
CREATED: 12/3/2019	MODIFIED: 1/7/2026	

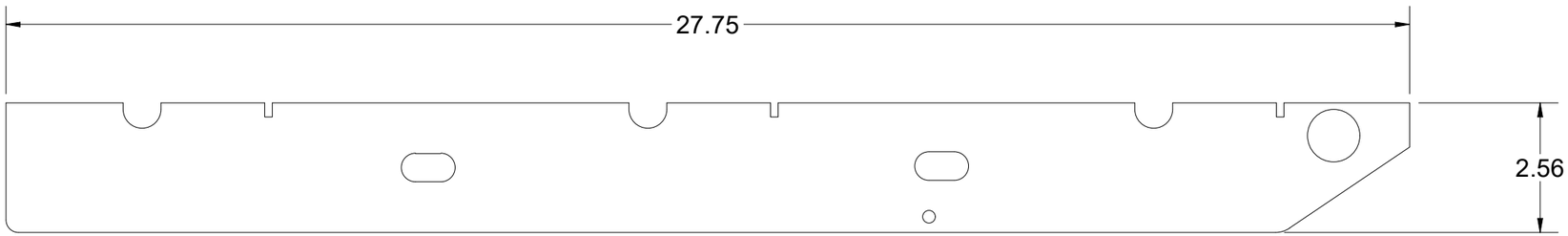

BEND TABLE				MATERIAL IFS: 100007735
BEND RADIUS	V-OPENING	BEND ANGLE	BEND DEDUCTION	MATERIAL THK: 0.25
-	-	- 0	-	MAT DESCRIPTION: STL ASTM A36 SM-HRPO RAW .250

Infrastructure
JENSEN
527 Dunn Circle, Sparks, NV 89431
775-352-2716 FAX: 755-358-8127
JENSENMETALTECH.COM

©2026 Jensen Infrastructure - All rights reserved.
All materials appearing as Jensen Infrastructure documents and the like are proprietary work product and are protected under U.S. copyright and other laws. Unless in conjunction with business conducted with Jensen Infrastructure , any use of Jensen Infrastructure work product without express, written consent is prohibited, and recipient is prohibited from distributing any and all work product to non-approved third parties under penalty of civil action.
This product shall only be produced in a Jensen Infrastructure facility.

NAME & DESCRIPTION: 200032894 Door Component Steel Side Bar		REV: B-4
WEIGHT: 4.683 lbmass	DRAWN BY: R. Dohr	SHEET: 8 OF 14
CREATED: 12/3/2019	MODIFIED: 1/7/2026	

100006595.idw

PART IS NOT SYMMETRIC

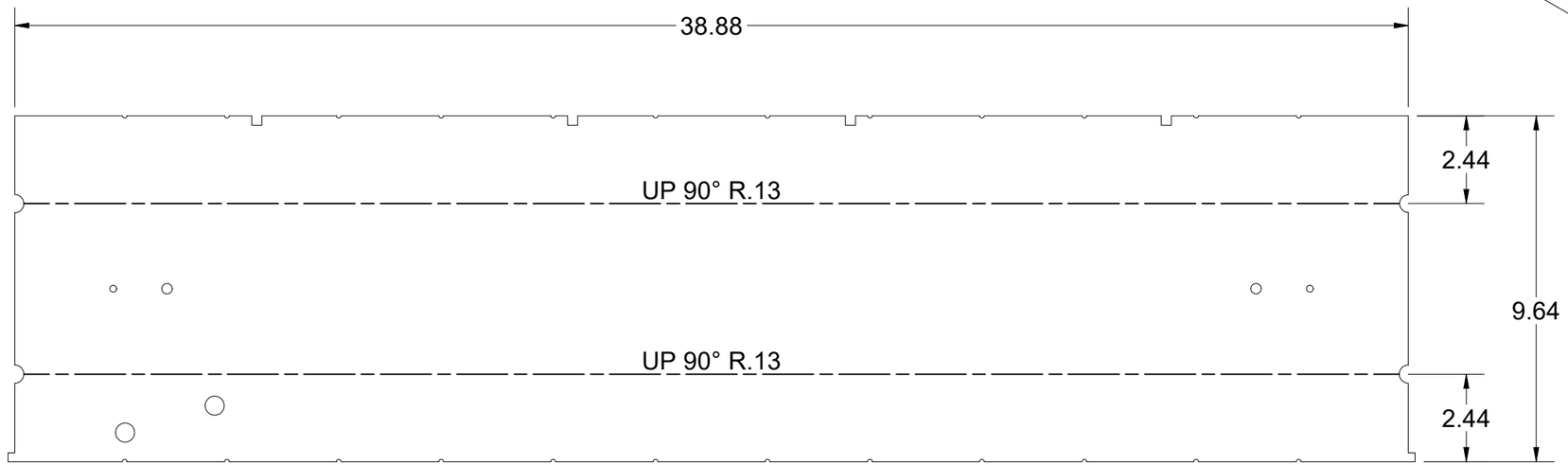

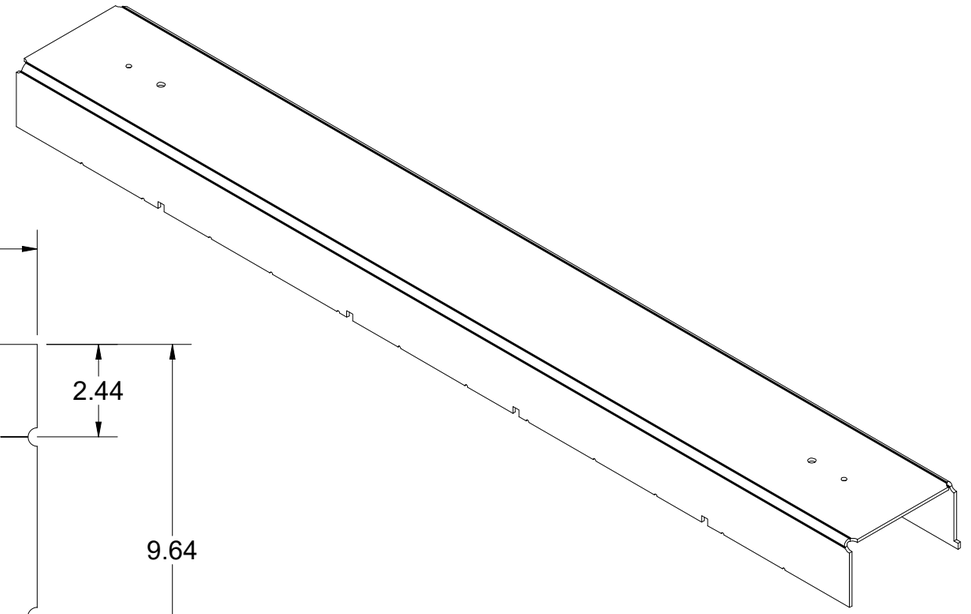

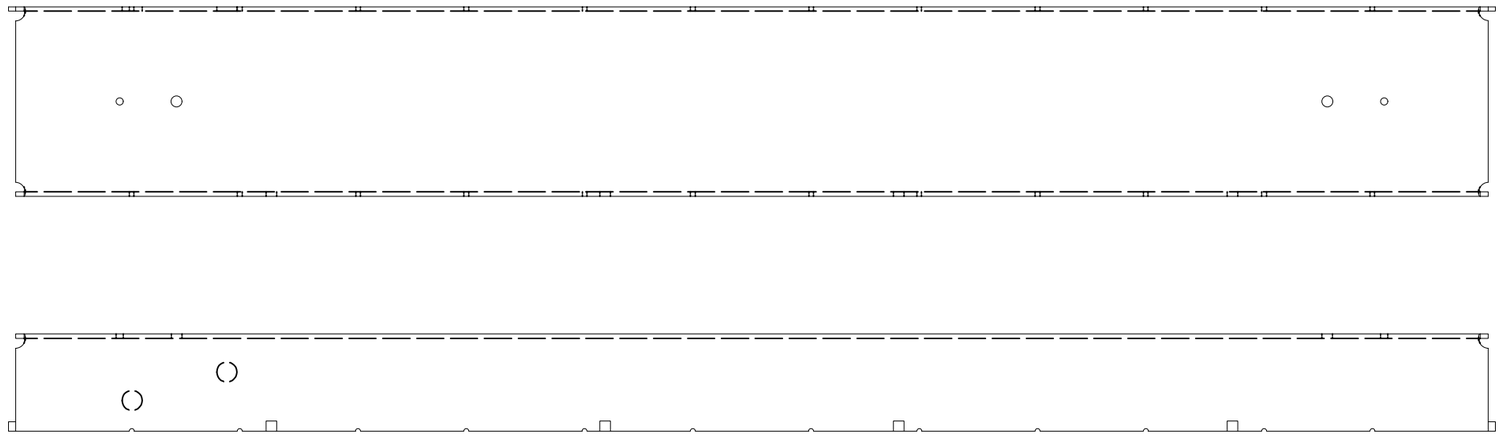

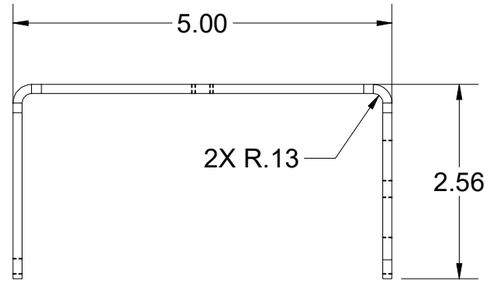

BEND TABLE			
BEND RADIUS	V-OPENING	BEND ANGLE	BEND DEDUCTION
0.125	2	90	0.243

MATERIAL IFS: 100007840

MATERIAL THK: 0.1196

MAT DESCRIPTION: SHT STL GR80 GA-11 SM-HR RAW .1196

Infrastructure JENSEN

527 Dunn Circle, Sparks, NV 89431
775-352-2716 FAX: 755-358-8127
JENSENMETALTECH.COM

©2026 Jensen Infrastructure - All rights reserved.
All materials appearing as Jensen Infrastructure documents and the like are proprietary work product and are protected under U.S. copyright and other laws. Unless in conjunction with business conducted with Jensen Infrastructure , any use of Jensen Infrastructure work product without express, written consent is prohibited, and recipient is prohibited from distributing any and all work product to non-approved third parties under penalty of civil action.
This product shall only be produced in a Jensen Infrastructure facility.

NAME & DESCRIPTION: 200032896 Door Component Steel Channel

REV: B-4

WEIGHT: 12.778 lbmass

DRAWN BY: R. Dohr

CREATED: 12/3/2019

MODIFIED: 1/7/2026

SHEET: 9 OF 14

100006595.idw

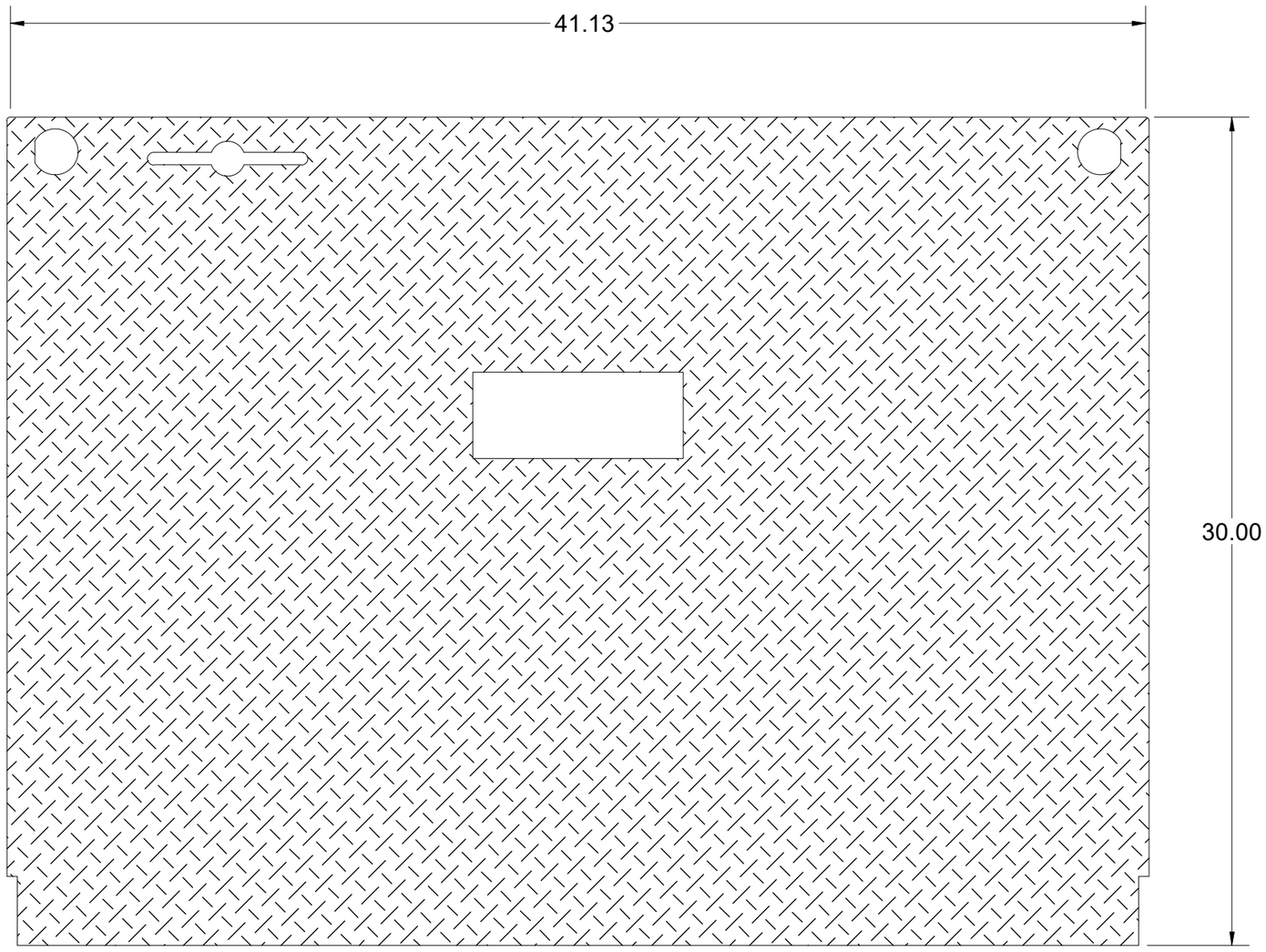

100006595.idw

BEND TABLE			
BEND RADIUS	V-OPENING	BEND ANGLE	BEND DEDUCTION
-	-	- 0	-

MATERIAL IFS: 100007736

MATERIAL THK: 0.25

MAT DESCRIPTION: SHT STL CQ DP RAW .25 - 36 KSI YIELD

Infrastructure
JENSEN
527 Dunn Circle, Sparks, NV 89431
775-352-2716 FAX: 755-358-8127
JENSENMETALTECH.COM

©2026 Jensen Infrastructure - All rights reserved.
All materials appearing as Jensen Infrastructure documents and the like are proprietary work product and are protected under U.S. copyright and other laws. Unless in conjunction with business conducted with Jensen Infrastructure , any use of Jensen Infrastructure work product without express, written consent is prohibited, and recipient is prohibited from distributing any and all work product to non-approved third parties under penalty of civil action.
This product shall only be produced in a Jensen Infrastructure facility.

NAME & DESCRIPTION: 200032898
Door Component Steel Plate, Top Nameplate

REV: B-4

WEIGHT: 94.467 lbmass

DRAWN BY: R. Dohr

CREATED: 12/3/2019

MODIFIED: 1/7/2026

SHEET: 10 OF 14

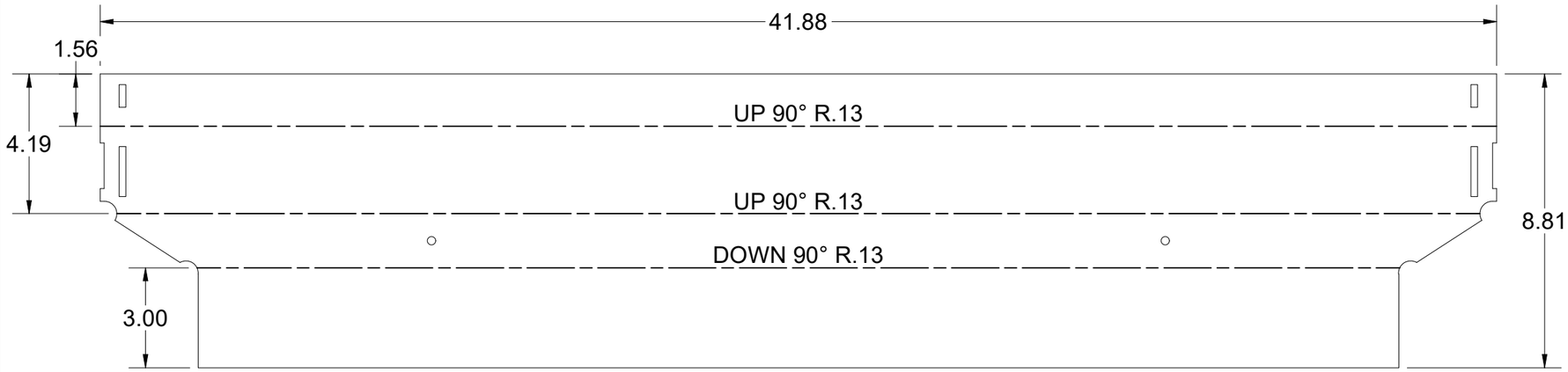

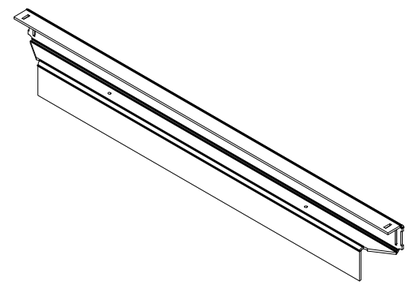



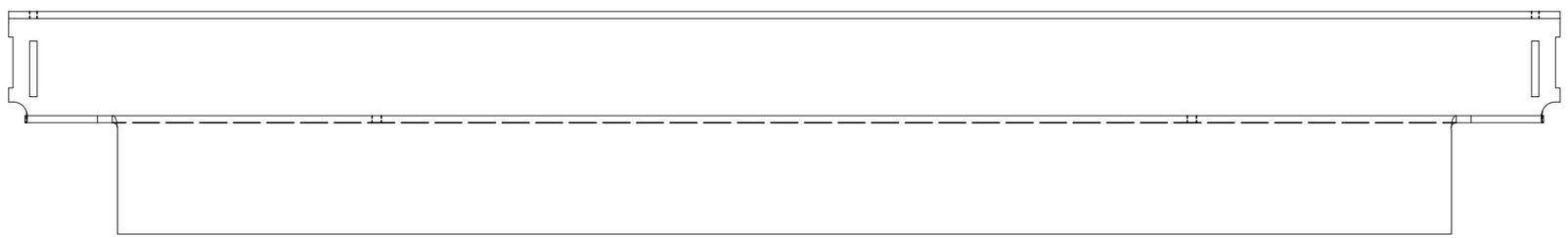

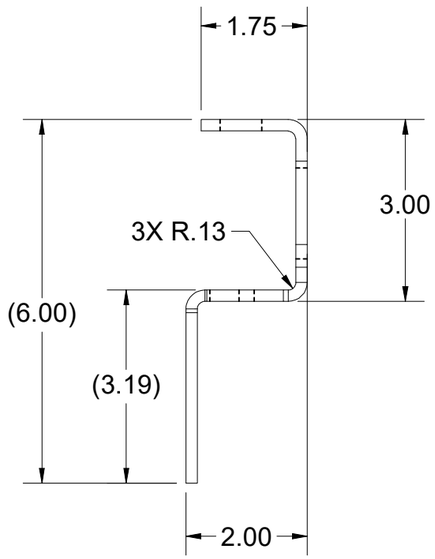

BEND TABLE				MATERIAL IFS: 100007734	Infrastructure JENSEN 527 Dunn Circle, Sparks, NV 89431 775-352-2716 FAX: 755-358-8127 *JENSENMETALTECH.COM*	©2026 Jensen Infrastructure - All rights reserved. All materials appearing as Jensen Infrastructure documents and the like are proprietary work product and are protected under U.S. copyright and other laws. Unless in conjunction with business conducted with Jensen Infrastructure , any use of Jensen Infrastructure work product without express, written consent is prohibited, and recipient is prohibited from distributing any and all work product to non-approved third parties under penalty of civil action. This product shall only be produced in a Jensen Infrastructure facility.	NAME & DESCRIPTION: 200032900 Frame Component Steel Frame End, Cast In	REV: B-4
BEND RADIUS	V-OPENING	BEND ANGLE	BEND DEDUCTION	MATERIAL THK: 0.1875			WEIGHT: 18.940 lbmass	DRAWN BY: R. Dohr	SHEET: 11 OF 14
0.125	2	90	0.375	MAT DESCRIPTION: STL ASTM A36 SM-HRPO 60X120 RAW .1875			CREATED: 12/3/2019	MODIFIED: 1/7/2026	

100006595.idw

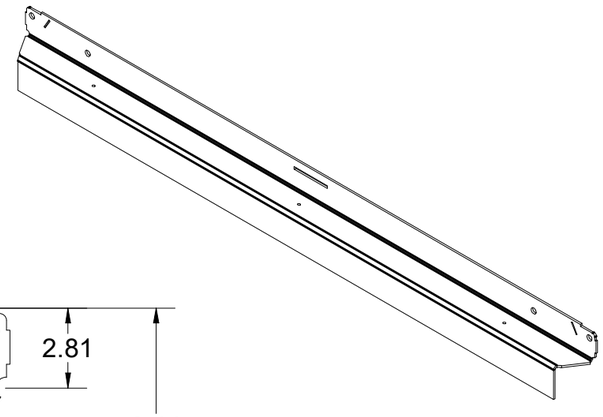

PART IS SYMMETRIC

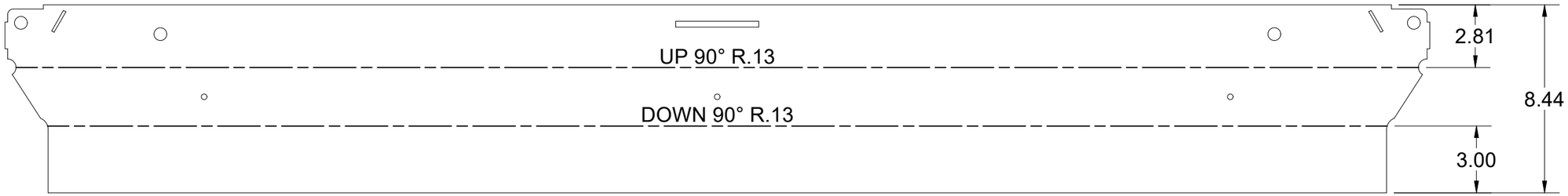

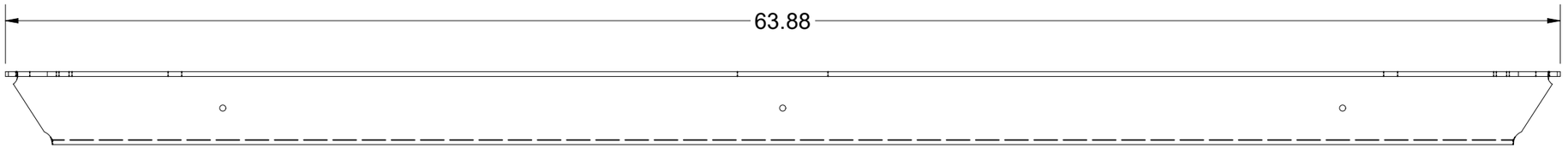

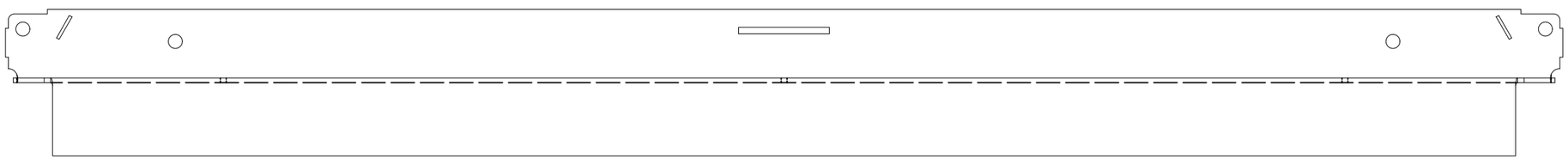

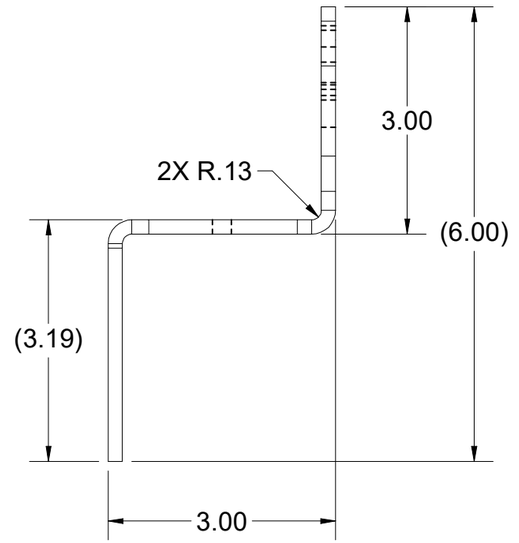

BEND TABLE			
BEND RADIUS	V-OPENING	BEND ANGLE	BEND DEDUCTION
0.125	2	90	0.375

MATERIAL IFS: 100007734

MATERIAL THK: 0.1875

MAT DESCRIPTION: STL ASTM A36 SM-HRPO 60X120 RAW .1875

Infrastructure JENSEN

527 Dunn Circle, Sparks, NV 89431
775-352-2716 FAX: 755-358-8127
JENSENMETALTECH.COM

©2026 Jensen Infrastructure - All rights reserved. All materials appearing as Jensen Infrastructure documents and the like are proprietary work product and are protected under U.S. copyright and other laws. Unless in conjunction with business conducted with Jensen Infrastructure , any use of Jensen Infrastructure work product without express, written consent is prohibited, and recipient is prohibited from distributing any and all work product to non-approved third parties under penalty of civil action. This product shall only be produced in a Jensen Infrastructure facility.

NAME & DESCRIPTION: 200032901 Frame Component Steel Frame Side, Cast In

REV: B-4

WEIGHT: 28.175 lbmass

DRAWN BY: R. Dohr

CREATED: 12/3/2019

MODIFIED: 1/7/2026

SHEET: 12 OF 14

100006595.idw

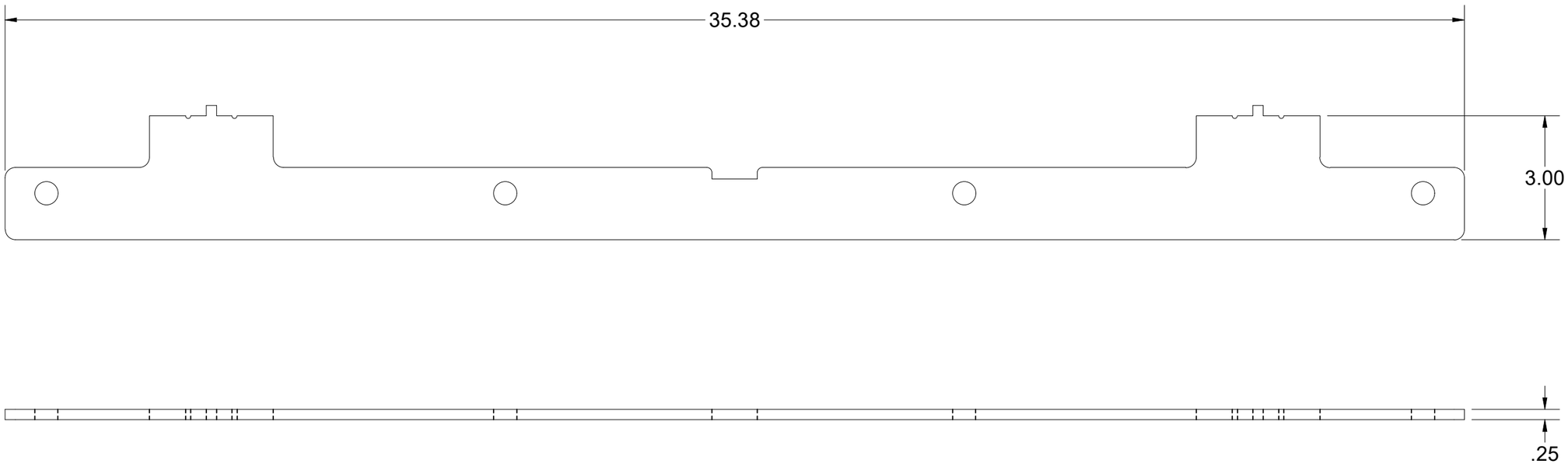

BEND TABLE				MATERIAL IFS: 100007735
BEND RADIUS	V-OPENING	BEND ANGLE	BEND DEDUCTION	MATERIAL THK: 0.25
-	-	- 0	-	MAT DESCRIPTION: STL ASTM A36 SM-HRPO RAW .250

Infrastructure
JENSEN
527 Dunn Circle, Sparks, NV 89431
775-352-2716 FAX: 755-358-8127
JENSENMETALTECH.COM

©2026 Jensen Infrastructure - All rights reserved.
All materials appearing as Jensen Infrastructure documents and the like are proprietary work product and are protected under U.S. copyright and other laws. Unless in conjunction with business conducted with Jensen Infrastructure , any use of Jensen Infrastructure work product without express, written consent is prohibited, and recipient is prohibited from distributing any and all work product to non-approved third parties under penalty of civil action.
This product shall only be produced in a Jensen Infrastructure facility.

NAME & DESCRIPTION: 200087246 Door Component Steel Lap Bar 36in, 2.5" Stiffener Offset		REV: B-4
WEIGHT: 4.842 lbmass	DRAWN BY: R. Dohr	SHEET: 13 OF 14
CREATED: 12/3/2019	MODIFIED: 1/7/2026	

100006595.idw

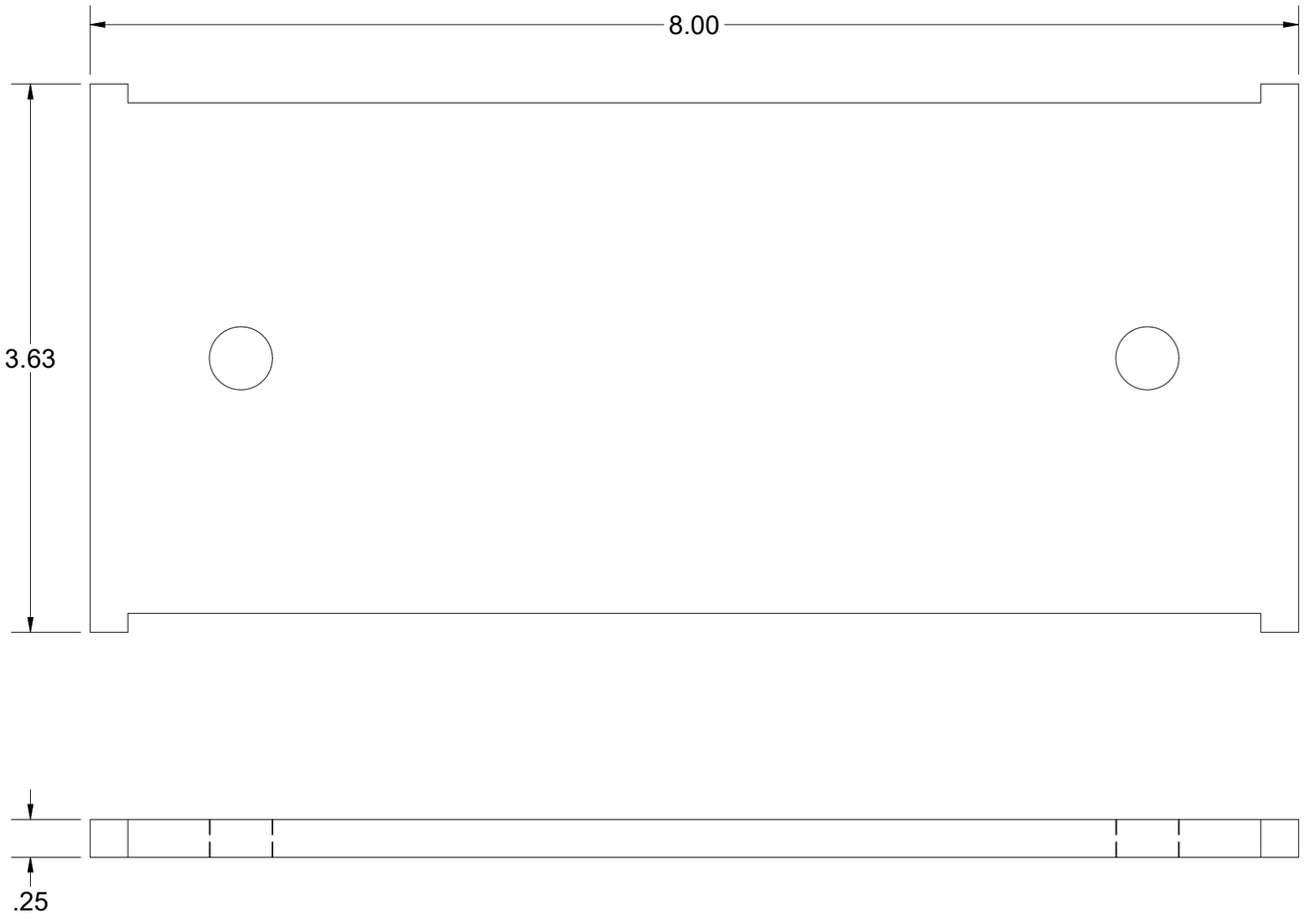

BEND TABLE				MATERIAL IFS: 100007735
BEND RADIUS	V-OPENING	BEND ANGLE	BEND DEDUCTION	MATERIAL THK: 0.25
-	-	-	-	MAT DESCRIPTION: STL ASTM A36 SM-HRPO RAW .250

Infrastructure
JENSEN
527 Dunn Circle, Sparks, NV 89431
775-352-2716 FAX: 755-358-8127
JENSENMETALTECH.COM

©2026 Jensen Infrastructure - All rights reserved.
All materials appearing as Jensen Infrastructure documents and the like are proprietary work product and are protected under U.S. copyright and other laws. Unless in conjunction with business conducted with Jensen Infrastructure , any use of Jensen Infrastructure work product without express, written consent is prohibited, and recipient is prohibited from distributing any and all work product to non-approved third parties under penalty of civil action.
This product shall only be produced in a Jensen Infrastructure facility.

NAME & DESCRIPTION:	200088891 NAME PLATE BACKING PLATE	REV: B-4
WEIGHT: 1.910 lbmass	DRAWN BY: R. Dohr	SHEET: 14 OF 14
CREATED: 12/3/2019	MODIFIED: 1/7/2026	

100006595.idw