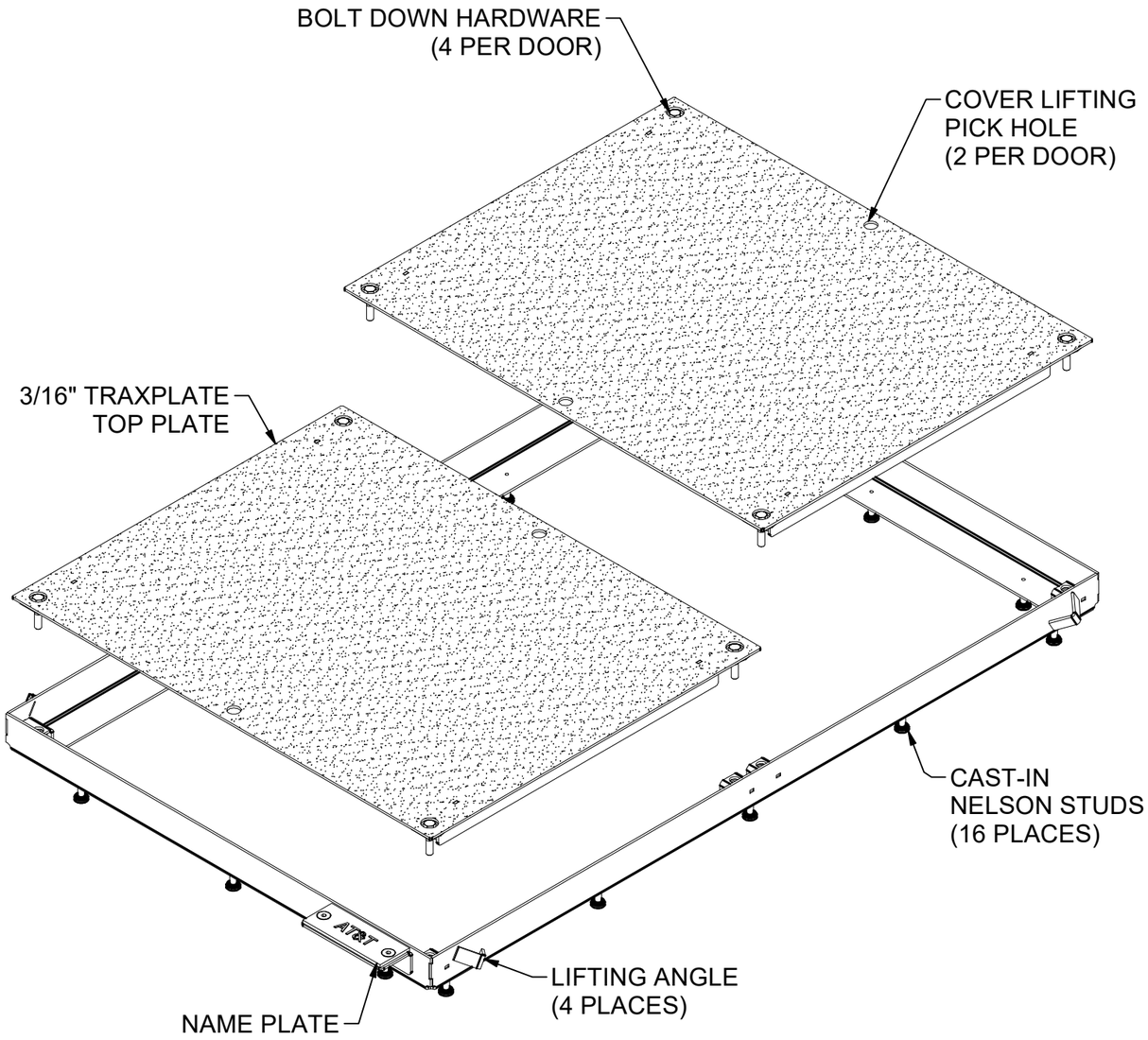

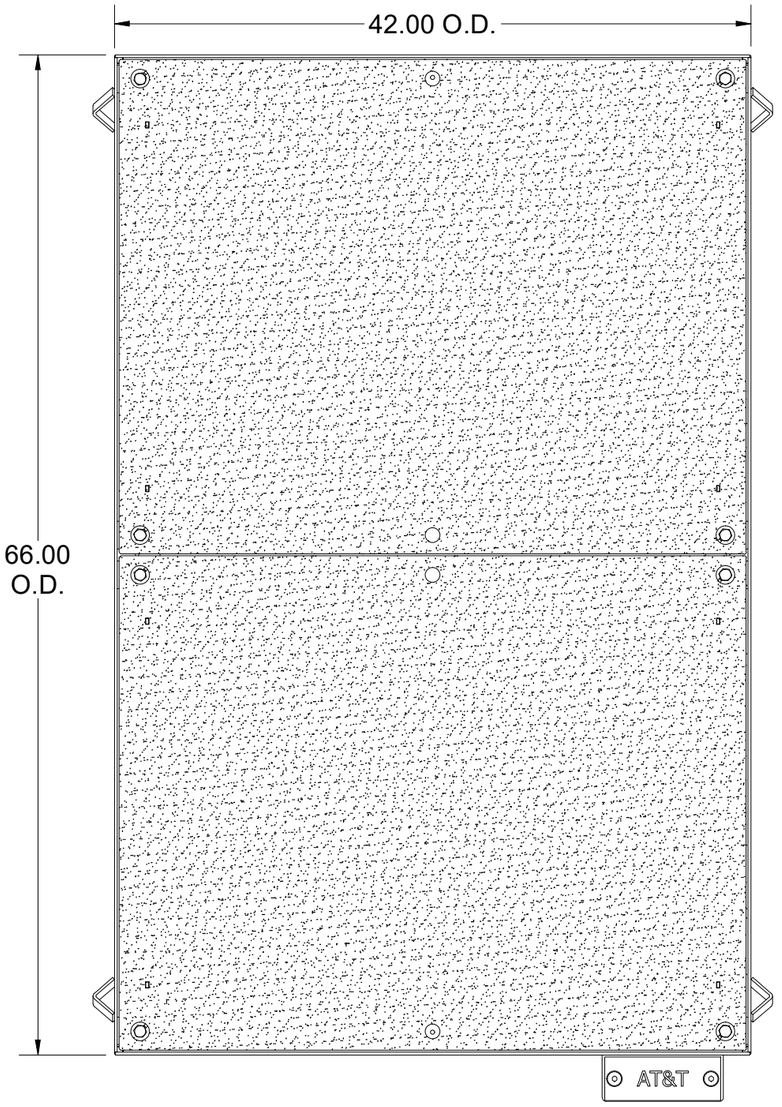

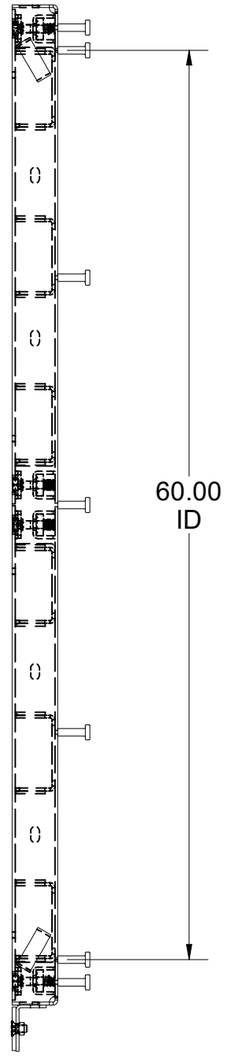

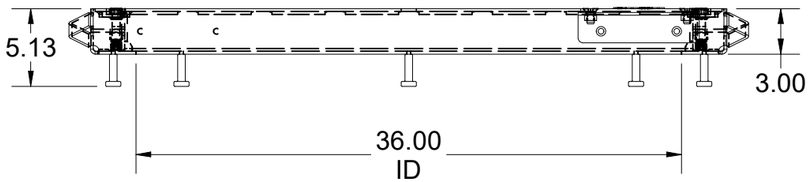

100006594.idw

LOADING CRITERIA: ASTM C1802 Load Level 05

16,000 lb load on 10" x 20" footprint, with 30% impact restricted to unrestricted parking lanes and alleyways where traffic speed is limited to 15 miles per hour.

SURFACE:	TraxPlate™	FINISH:	Galvanized
WEIGHT:	352.11 lbs	MARKING:	As Noted

Infrastructure
JENSEN
527 Dunn Circle, Sparks, NV 89431
775-352-2716 FAX: 755-358-8127
JENSENMETALTECH.COM

©2026 Jensen Infrastructure - All rights reserved.
All materials appearing as Jensen Infrastructure documents and the like are proprietary work product and are protected under U.S. copyright and other laws. Unless in conjunction with business conducted with Jensen Infrastructure , any use of Jensen Infrastructure work product without express, written consent is prohibited, and recipient is prohibited from distributing any and all work product to non-approved third parties under penalty of civil action.
This product shall only be produced in a Jensen Infrastructure facility.

DESCRIPTION:	CAS2-3660-CD5-TRX-G-BD-FONT-ATT-OH03 36x60 Standard Cover Assembly (ASTM C1802 Load Level 05, Steel, Drop In, Pickhole, TraxPlate™, Galvanized, AT&T) 03			REV:	A-2
PART NUMBER:	100006594	DRAWN BY:	R. Dohr	SHEET:	1
CREATED:	5/8/2026	MODIFIED:	6/5/2026		

BILL OF MATERIALS

ITEM	ITEM QTY	QTY	PART NUMBER	DESCRIPTION	PART NAME
1	1	1	200118909	FAS-3660-CD4-R-OH06	200118909
2	2	2	200118908	DAS2-T-3660-D4-TRX-R-BD	200118908
3	8	8	100007441	STRUT FITTING SPRING NUT 1/2-13 UNC 1-5/8 CHANNEL REGULAR SPRING ZINC	100007441
4	8	8	100007866	Round Push Nut, Steel, for 1/2" Screw Size	100007866
5	2	2	100007733	Bolt Socket Flat Countersunk Head - 1/2-13 UNC - Grade 5 - Zinc - FT - 1"	100007733
6	8	8	100011407	Hex Bolt 1/2-13 UNC ZINC - PT - 2.25"	100011407
7	1	1	100007966	NAME PLATE CAST ALUM - AT&T	100007966

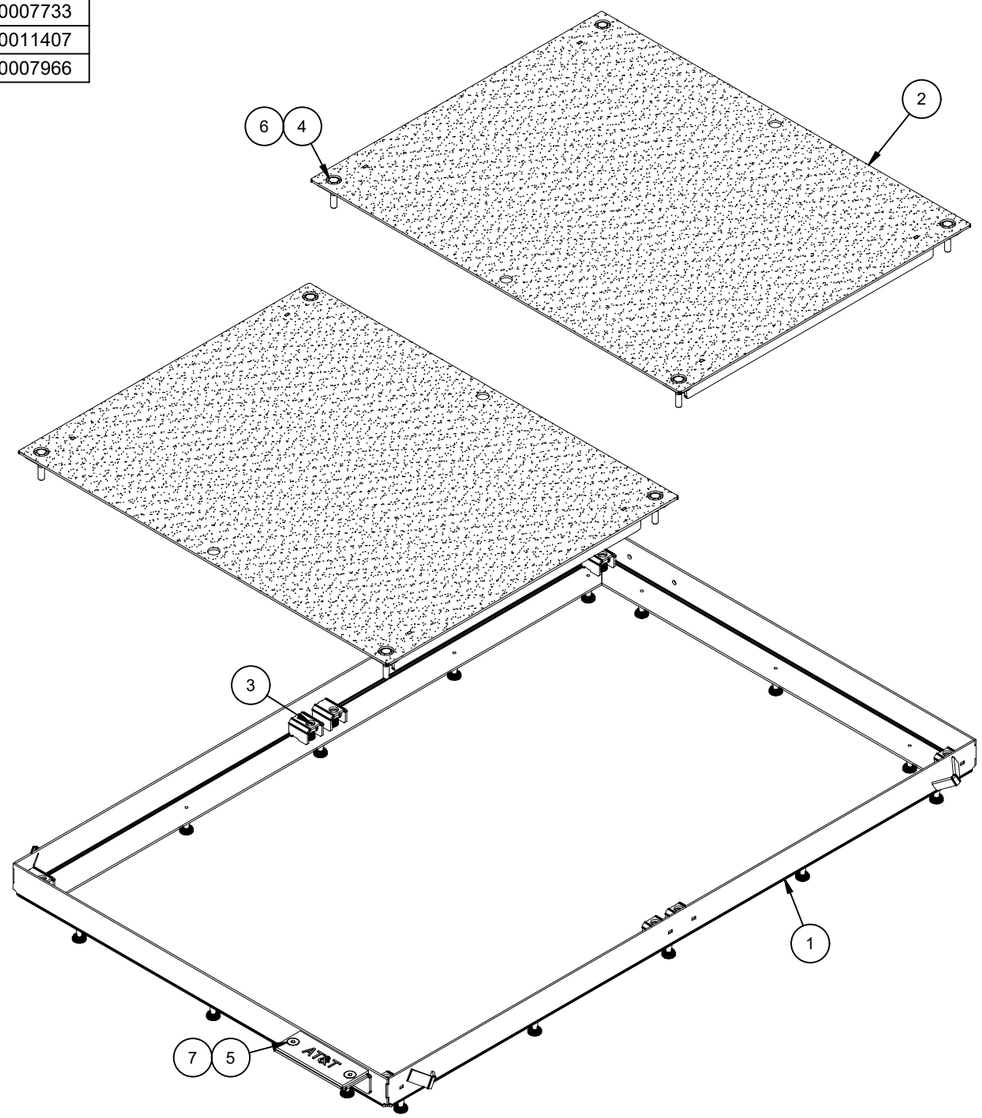

100006594.idw

REVISION HISTORY		
DESCRIPTION	DATE	REVISED BY
60818-1: CONVERTED TO INVENTOR	5/08/2026	C. HEYWOOD
MADE LOAD LEVEL 5. RERAN CALCS.	6/5/2026	R. DOHR

MATERIAL FINISH: Galvanized

MATERIAL SURFACE: TraxPlate™

Infrastructure JENSEN
527 Dunn Circle, Sparks, NV 89431
775-352-2716 FAX: 755-358-8127
JENSENMETALTECH.COM

©2026 Jensen Infrastructure - All rights reserved.
All materials appearing as Jensen Infrastructure documents and the like are proprietary work product and are protected under U.S. copyright and other laws. Unless in conjunction with business conducted with Jensen Infrastructure , any use of Jensen Infrastructure work product without express, written consent is prohibited, and recipient is prohibited from distributing any and all work product to non-approved third parties under penalty of civil action.
This product shall only be produced in a Jensen Infrastructure facility.

PART NUMBER & DESCRIPTION: 100006594 CAS2-3660-CD5-TRX-G-BD-FONT-ATT-OH03

REV: A-2

WEIGHT: 352.11 Lbs

DRAWN BY: R. Dohr

CREATED: 5/8/2026

MODIFIED: 6/5/2026

SHEET: 2

BURN LIST - BOM

PART NAME	ITEM QTY	QTY	DESCRIPTION	STOCK NUMBER	MATERIAL	MASS	SHEET
200118913	2	24.419 lbmass	Frame Component Steel Frame End, Cast In	100007734	STL ASTM A36 SM-HRPO 60X120 RAW .1875	12.209 lbmass	06
200118914	2	38.963 lbmass	Frame Component Steel Frame Side, Cast In	100007734	STL ASTM A36 SM-HRPO 60X120 RAW .1875	19.482 lbmass	07
200118911	6	115.335 lbmass	Door Component Steel Channel	100007821	SHT STL GR80 SM-HRPO RAW .1875	19.223 lbmass	08
200118912	4	15.179 lbmass	Door Component Steel Side Bar	100007821	SHT STL GR80 SM-HRPO RAW .1875	3.795 lbmass	09
200118910	2	142.829 lbmass	Door Component Steel Plate, Top	100007821	SHT STL GR80 SM-HRPO RAW .1875	71.415 lbmass	10

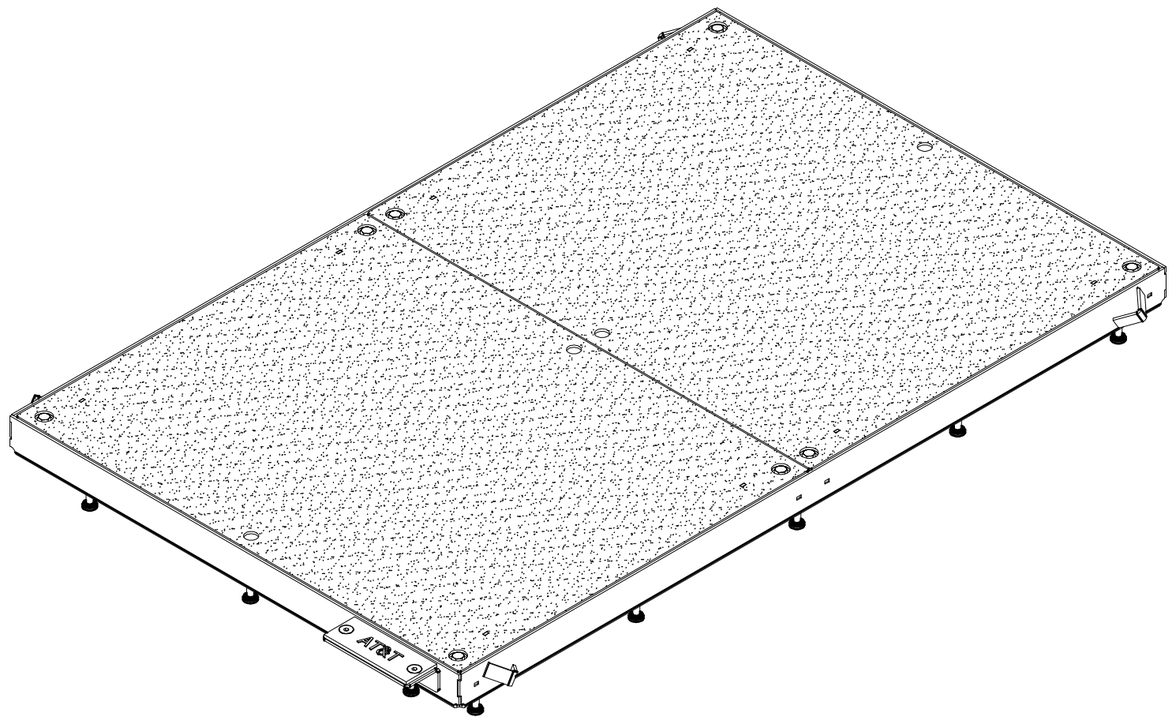

100006594.idw

MATERIAL FINISH: Galvanized

MATERIAL SURFACE: TraxPlate™

Infrastructure JENSEN
527 Dunn Circle, Sparks, NV 89431
775-352-2716 FAX: 755-358-8127
JENSENMETALTECH.COM

©2026 Jensen Infrastructure - All rights reserved.
All materials appearing as Jensen Infrastructure documents and the like are proprietary work product and are protected under U.S. copyright and other laws. Unless in conjunction with business conducted with Jensen Infrastructure , any use of Jensen Infrastructure work product without express, written consent is prohibited, and recipient is prohibited from distributing any and all work product to non-approved third parties under penalty of civil action.
This product shall only be produced in a Jensen Infrastructure facility.

PART NUMBER & DESCRIPTION: 100006594 CAS2-3660-CD5-TRX-G-BD-FONT-ATT-OH03

REV: A-2

WEIGHT: 352.11 Lbs

DRAWN BY: R. Dohr

SHEET: 3

CREATED: 5/8/2026

MODIFIED: 6/5/2026

BILL OF MATERIALS

ITEM	ITEM QTY	QTY	PART NUMBER	DESCRIPTION	PART NAME
1	1	71.415 lbmass	100007821	Door Component Steel Plate, Top	200118910
2	2	7.590 lbmass	100007821	Door Component Steel Side Bar	200118912
3	3	57.668 lbmass	100007821	Door Component Steel Channel	200118911
4	4	4	100007675	CAM BASE	100007675

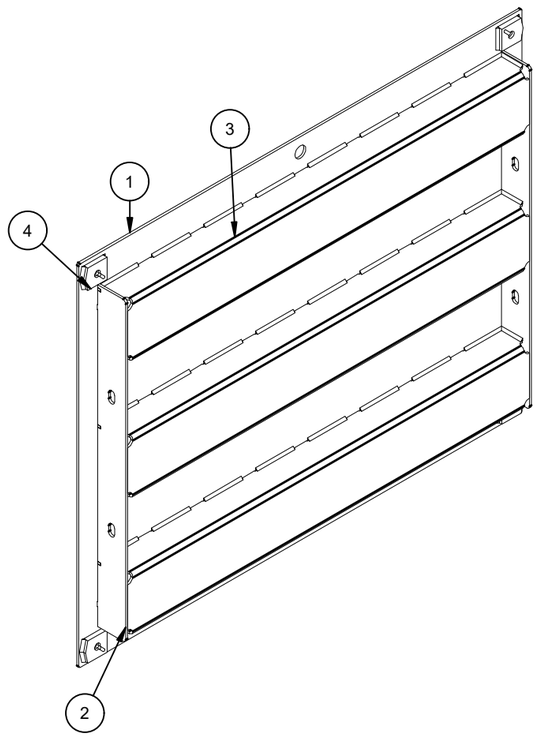

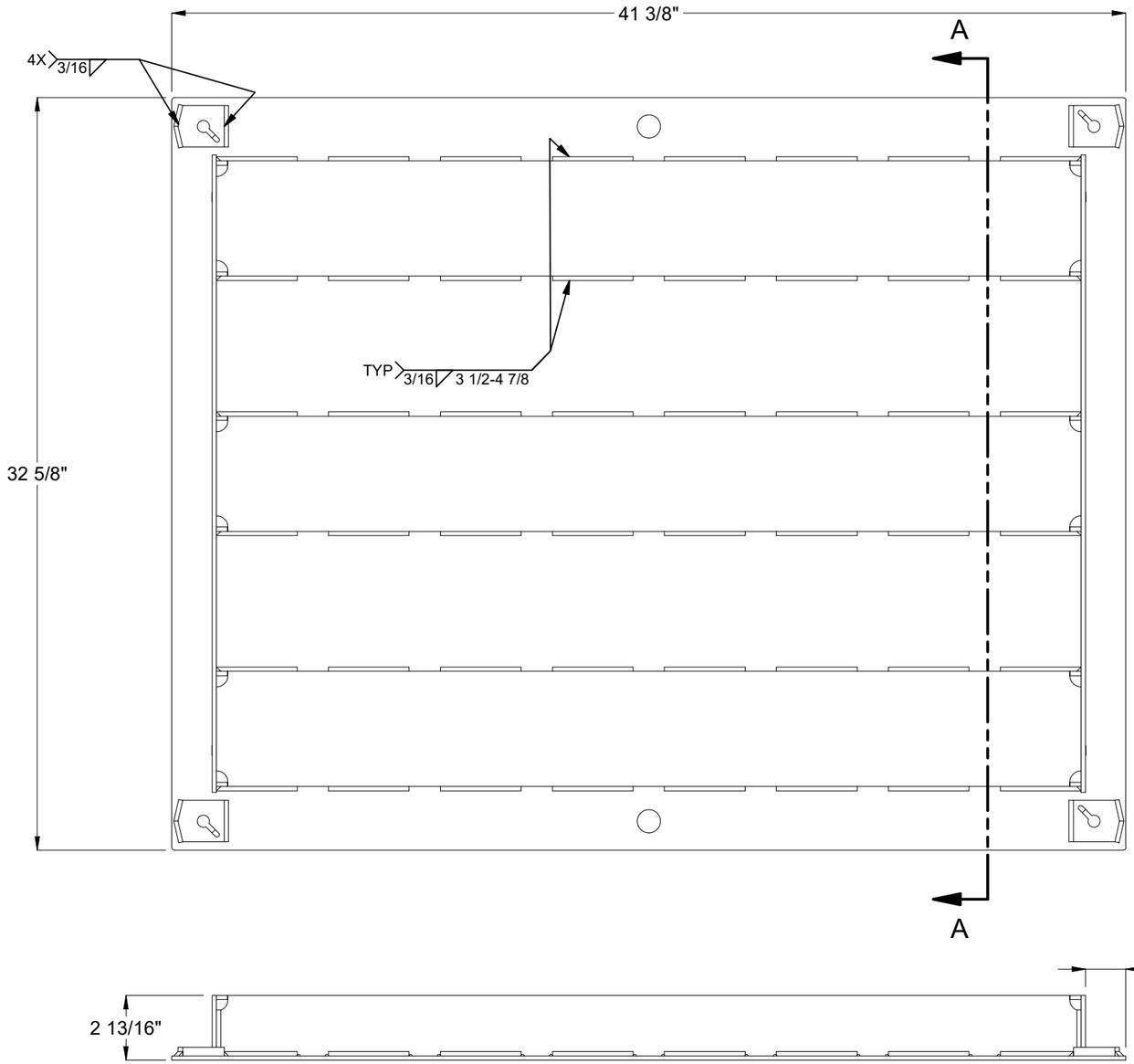

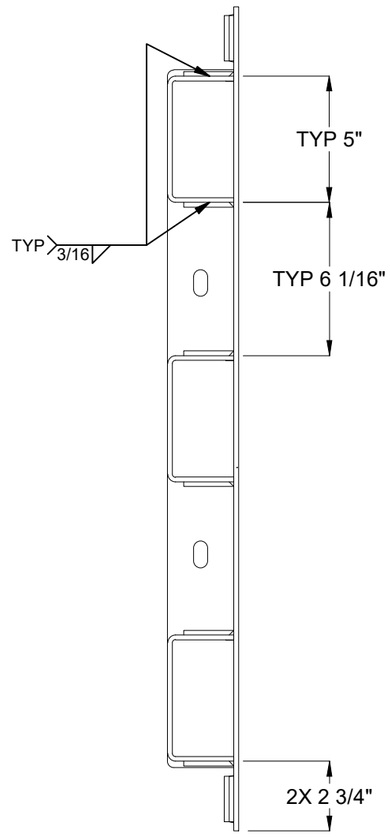

SECTION A-A
SCALE 1/6

100006594.idw

TWO DOORS NEEDED PER ASSEMBLY

MATERIAL FINISH: Raw	Jensen Infrastructure 527 Dunn Circle, Sparks, NV 89431 775-352-2716 FAX: 755-358-8127 *JENSENMETALTECH.COM*	©2026 Jensen Infrastructure - All rights reserved. All materials appearing as Jensen Infrastructure documents and the like are proprietary work product and are protected under U.S. copyright and other laws. Unless in conjunction with business conducted with Jensen Infrastructure , any use of Jensen Infrastructure work product without express, written consent is prohibited, and recipient is prohibited from distributing any and all work product to non-approved third parties under penalty of civil action. This product shall only be produced in a Jensen Infrastructure facility.	PART NUMBER & DESCRIPTION: 200118908 DAS2-T-3660-D4-TRX-R-BD	REV: A-2
MATERIAL SURFACE: TraxPlate™			WEIGHT: 138.8 Lbs CREATED: 5/8/2026	DRAWN BY: R. Dohr MODIFIED: 6/5/2026	SHEET: 4

BILL OF MATERIALS

ITEM	ITEM QTY	QTY	PART NUMBER	DESCRIPTION	PART NAME
1	2	24.419 lbmass	100007734	Frame Component Steel Frame End, Cast In	200118913
2	2	38.963 lbmass	100007734	Frame Component Steel Frame Side, Cast In	200118914
3	8	8	100024179	SPRING NUT BRACKET	100024179
4	4	4	100007641	FRAME LIFTING BRACKET	100007641
5	1	1	100007667	NAME PLATE FRAME ANGLE	100007667
6	2	2	100007728	NUT SELF-CLINCH 1/2-13 S-0813-1 RAW	100007728
7	16	16	100007889	Anchor Weld Stud - H4L - 0.5" - A29/A108 - 2.125"	100007889

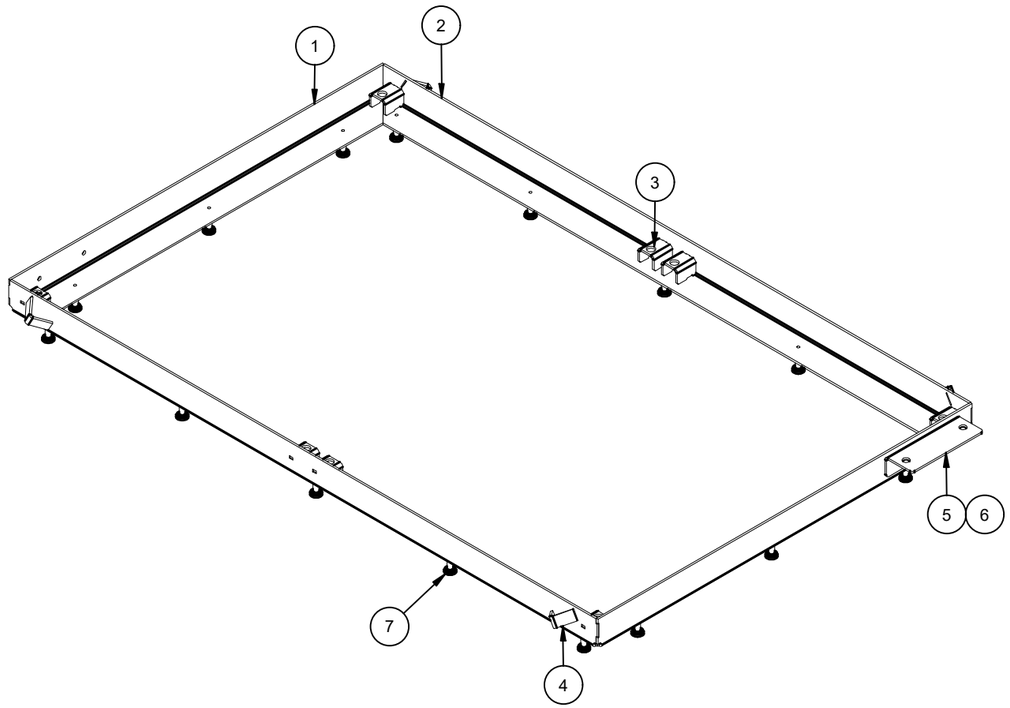

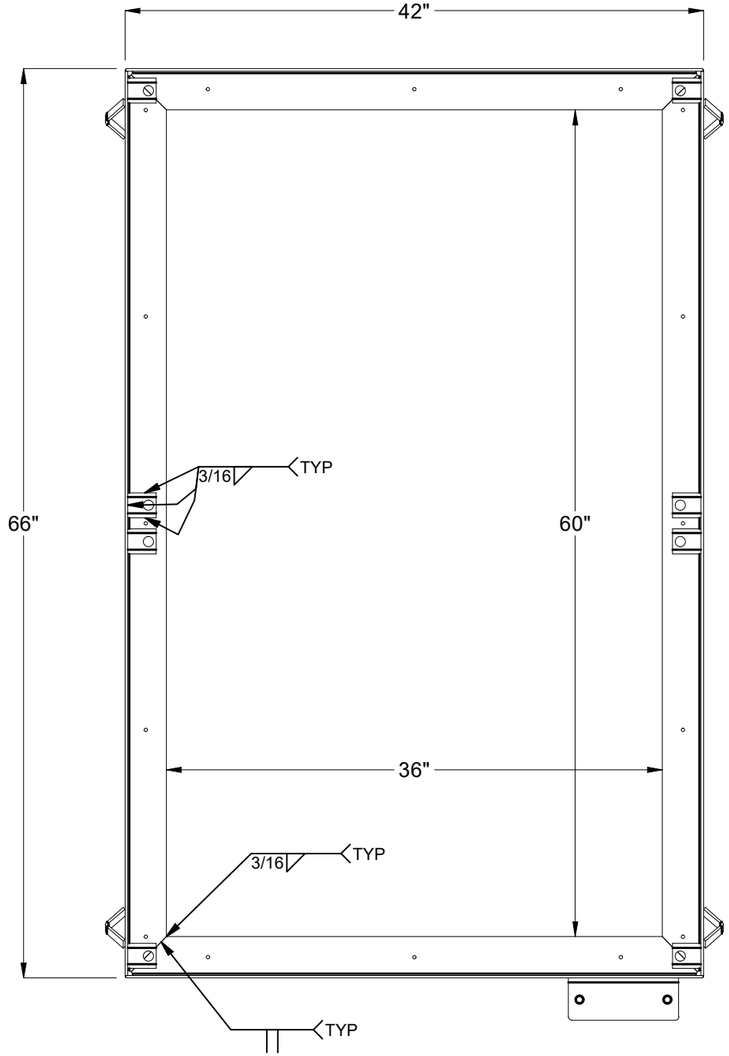

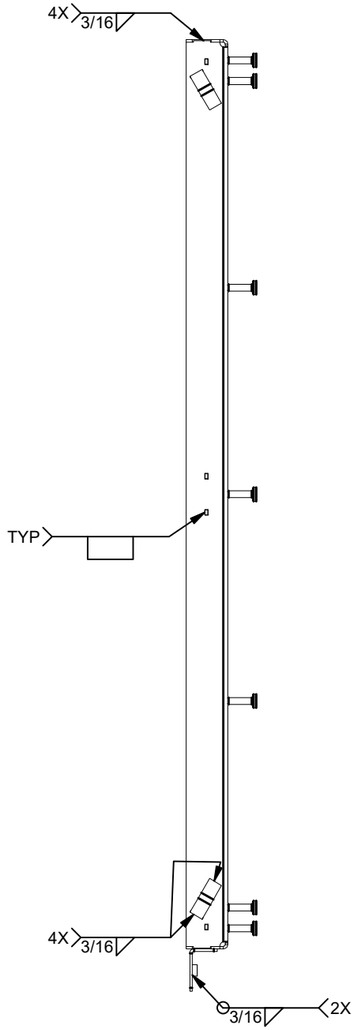

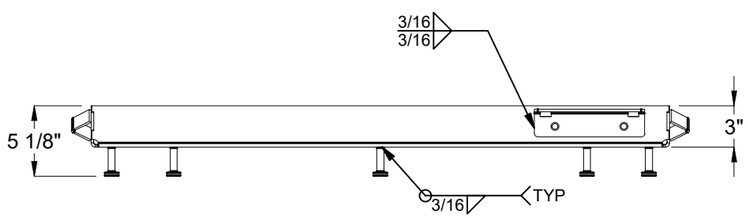

100006594.idw

MATERIAL FINISH: Raw	Infrastructure JENSEN 527 Dunn Circle, Sparks, NV 89431 775-352-2716 FAX: 755-358-8127 *JENSENMETALTECH.COM*	©2026 Jensen Infrastructure - All rights reserved. All materials appearing as Jensen Infrastructure documents and the like are proprietary work product and are protected under U.S. copyright and other laws. Unless in conjunction with business conducted with Jensen Infrastructure , any use of Jensen Infrastructure work product without express, written consent is prohibited, and recipient is prohibited from distributing any and all work product to non-approved third parties under penalty of civil action. This product shall only be produced in a Jensen Infrastructure facility.	PART NUMBER & DESCRIPTION: 200118909 FAS-3660-CD4-R-OH06	REV: A-2
MATERIAL SURFACE: Smooth			WEIGHT: 72.28 Lbs / DRAWN BY: R. Dohr	SHEET: 5
			CREATED: 5/8/2026 / MODIFIED: 6/5/2026	

NON-SYMMETRIC

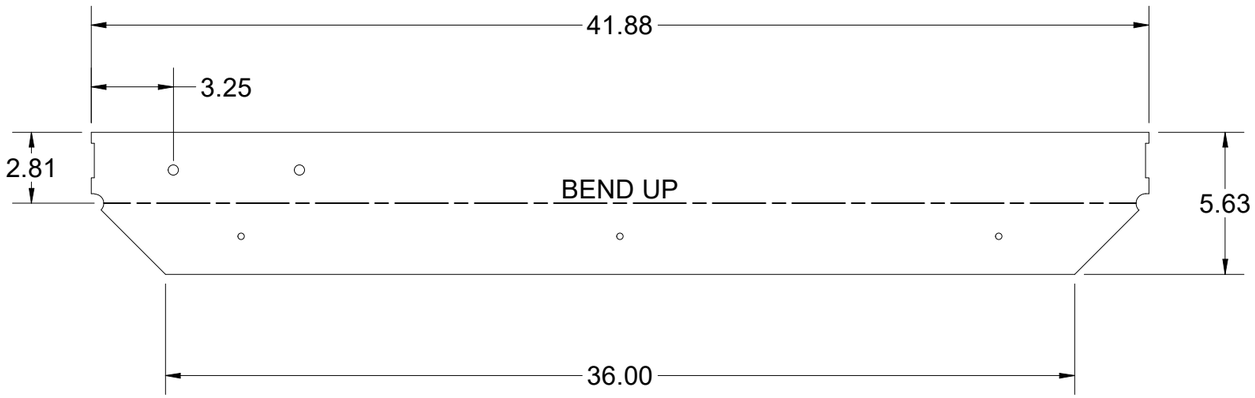

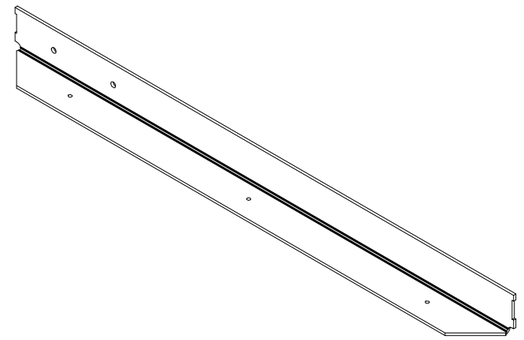

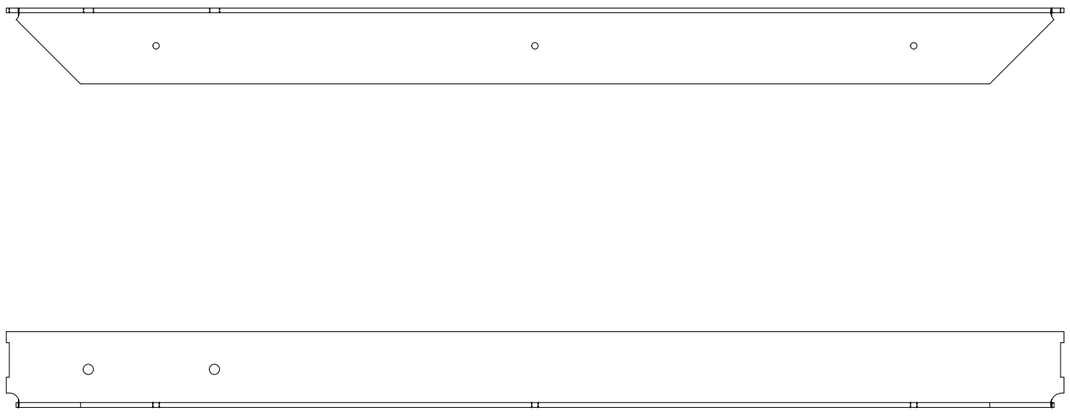

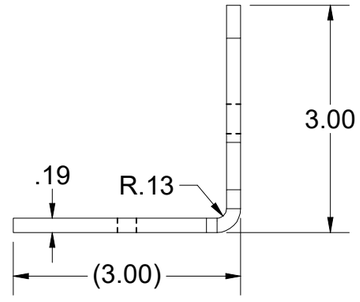

BEND TABLE				MATERIAL IFS: 100007734
BEND RADIUS	V-OPENING	BEND ANGLE	BEND DEDUCTION	MATERIAL THK: 0.1875
0.125	2	90	0.375	MAT DESCRIPTION: STL ASTM A36 SM-HRPO 60X120 RAW .1875

Infrastructure JENSEN
527 Dunn Circle, Sparks, NV 89431
775-352-2716 FAX: 755-358-8127
JENSENMETALTECH.COM

©2026 Jensen Infrastructure - All rights reserved. All materials appearing as Jensen Infrastructure documents and the like are proprietary work product and are protected under U.S. copyright and other laws. Unless in conjunction with business conducted with Jensen Infrastructure , any use of Jensen Infrastructure work product without express, written consent is prohibited, and recipient is prohibited from distributing any and all work product to non-approved third parties under penalty of civil action. This product shall only be produced in a Jensen Infrastructure facility.

NAME & DESCRIPTION:	200118913 Frame Component Steel Frame End, Cast In		REV: A-2
WEIGHT: 12.209 lbmass		DRAWN BY: R. Dohr	SHEET: 6 OF 10
CREATED: 5/8/2026		MODIFIED: 6/5/2026	

100006594.idw

SYMMETRIC

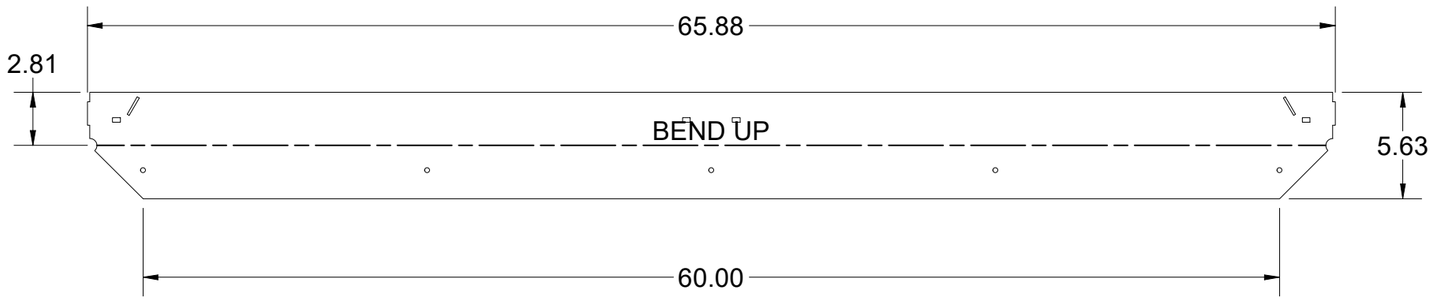

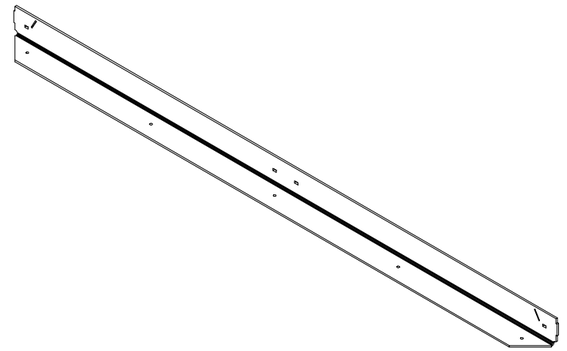

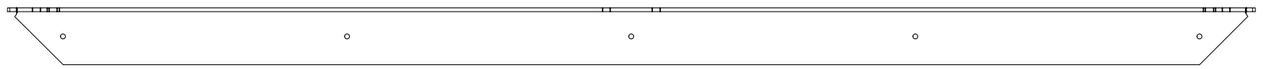

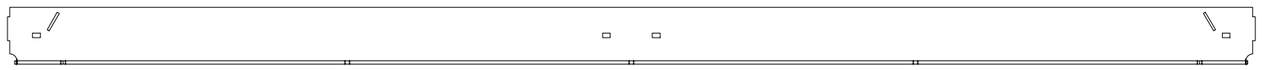

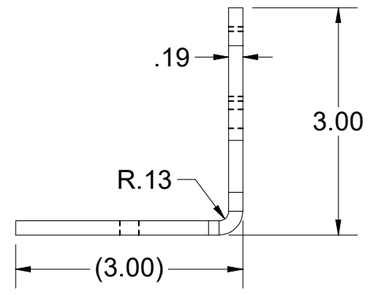

BEND TABLE				MATERIAL IFS: 100007734
BEND RADIUS	V-OPENING	BEND ANGLE	BEND DEDUCTION	MATERIAL THK: 0.1875
0.125	2	90	0.375	MAT DESCRIPTION: STL ASTM A36 SM-HRPO 60X120 RAW .1875

Infrastructure JENSEN
527 Dunn Circle, Sparks, NV 89431
775-352-2716 FAX: 755-358-8127
JENSENMETALTECH.COM

©2026 Jensen Infrastructure - All rights reserved.
All materials appearing as Jensen Infrastructure documents and the like are proprietary work product and are protected under U.S. copyright and other laws. Unless in conjunction with business conducted with Jensen Infrastructure , any use of Jensen Infrastructure work product without express, written consent is prohibited, and recipient is prohibited from distributing any and all work product to non-approved third parties under penalty of civil action.
This product shall only be produced in a Jensen Infrastructure facility.

NAME & DESCRIPTION: 200118914 Frame Component Steel Frame Side, Cast In		REV: A-2
WEIGHT: 19.482 lbmass	DRAWN BY: R. Dohr	SHEET: 7 OF 10
CREATED: 5/8/2026	MODIFIED: 6/5/2026	

100006594.idw

SYMMETRIC

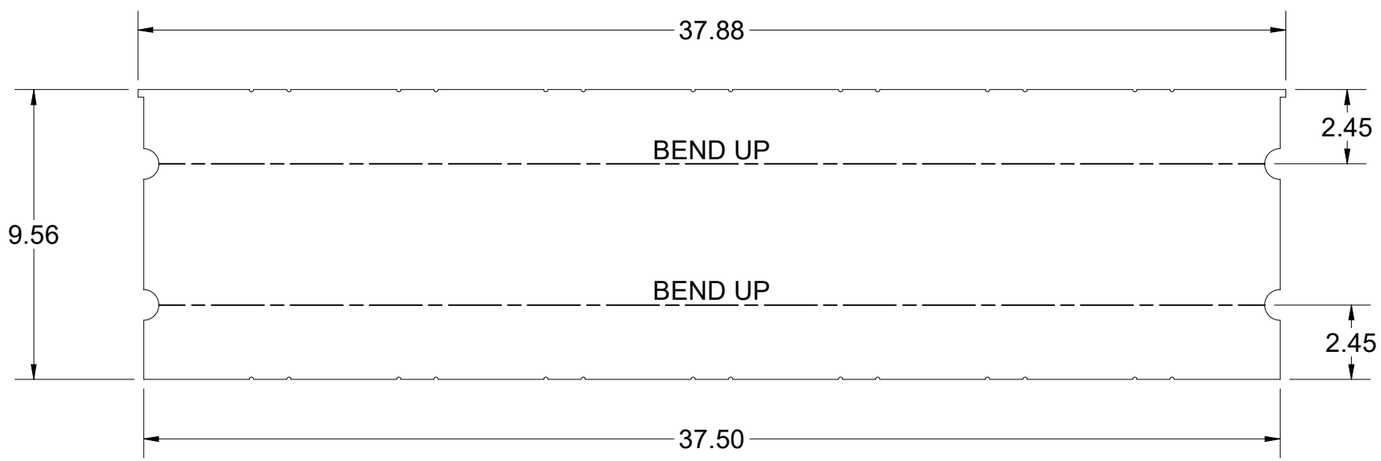

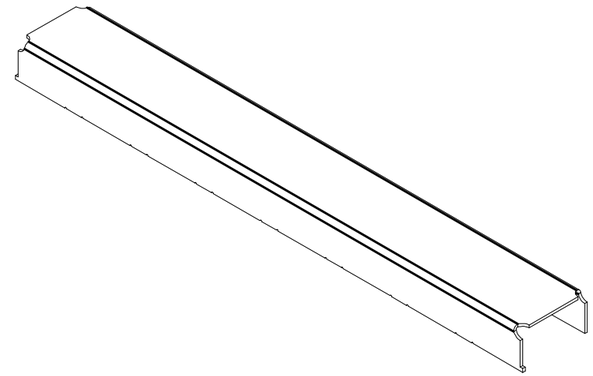

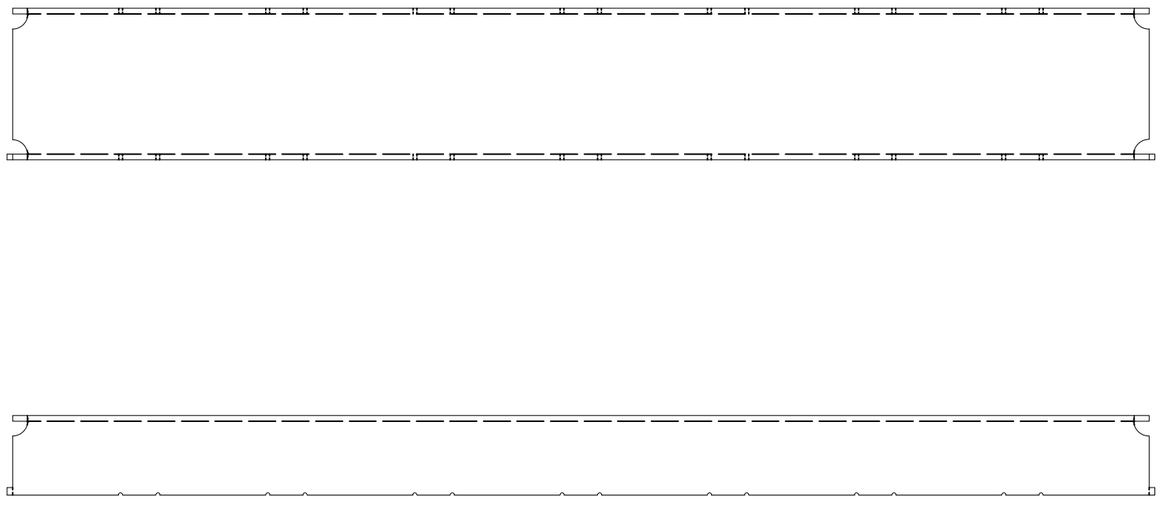

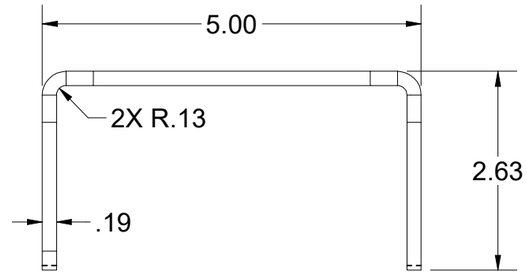

BEND TABLE				MATERIAL IFS: 100007821
BEND RADIUS	V-OPENING	BEND ANGLE	BEND DEDUCTION	MATERIAL THK: 0.1875
0.125	2	90	0.345	MAT DESCRIPTION: SHT STL GR80 SM-HRPO RAW .1875

Infrastructure JENSEN

527 Dunn Circle, Sparks, NV 89431
775-352-2716 FAX: 755-358-8127
JENSENMETALTECH.COM

©2026 Jensen Infrastructure - All rights reserved.
All materials appearing as Jensen Infrastructure documents and the like are proprietary work product and are protected under U.S. copyright and other laws. Unless in conjunction with business conducted with Jensen Infrastructure , any use of Jensen Infrastructure work product without express, written consent is prohibited, and recipient is prohibited from distributing any and all work product to non-approved third parties under penalty of civil action.
This product shall only be produced in a Jensen Infrastructure facility.

NAME & DESCRIPTION: 200118911 Door Component Steel Channel		REV: A-2
WEIGHT: 19.223 lbmass	DRAWN BY: R. Dohr	SHEET: 8 OF 10
CREATED: 5/8/2026	MODIFIED: 6/5/2026	

100006594.idw

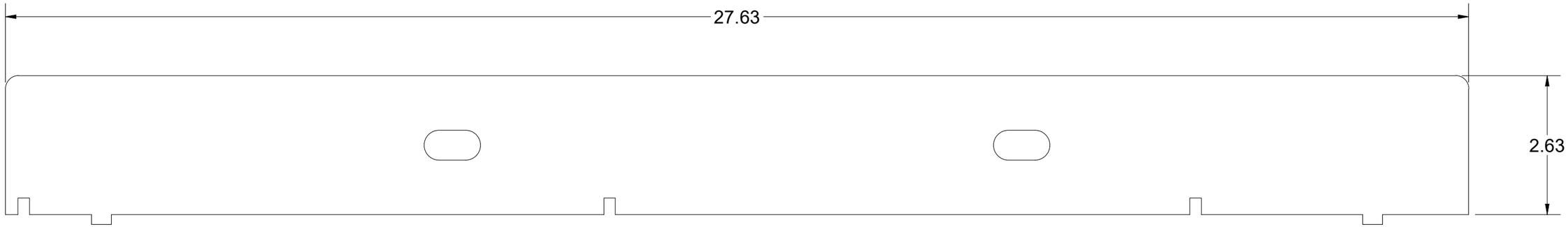



BEND TABLE				MATERIAL IFS: 100007821
BEND RADIUS	V-OPENING	BEND ANGLE	BEND DEDUCTION	MATERIAL THK: 0.1875
-	-	- 0	-	MAT DESCRIPTION: SHT STL GR80 SM-HRPO RAW .1875

Infrastructure
JENSEN
527 Dunn Circle, Sparks, NV 89431
775-352-2716 FAX: 755-358-8127
JENSENMETALTECH.COM

©2026 Jensen Infrastructure - All rights reserved.
All materials appearing as Jensen Infrastructure documents and the like are proprietary work product and are protected under U.S. copyright and other laws. Unless in conjunction with business conducted with Jensen Infrastructure , any use of Jensen Infrastructure work product without express, written consent is prohibited, and recipient is prohibited from distributing any and all work product to non-approved third parties under penalty of civil action.
This product shall only be produced in a Jensen Infrastructure facility.

NAME & DESCRIPTION:		REV:
200118912 Door Component Steel Side Bar		A-2
WEIGHT: 3.795 lbmass	DRAWN BY: R. Dohr	SHEET: 9 OF 10
CREATED: 5/8/2026	MODIFIED: 6/5/2026	

100006594.idw

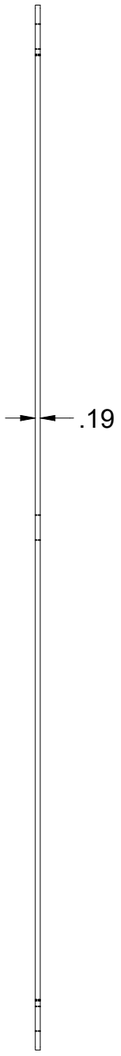

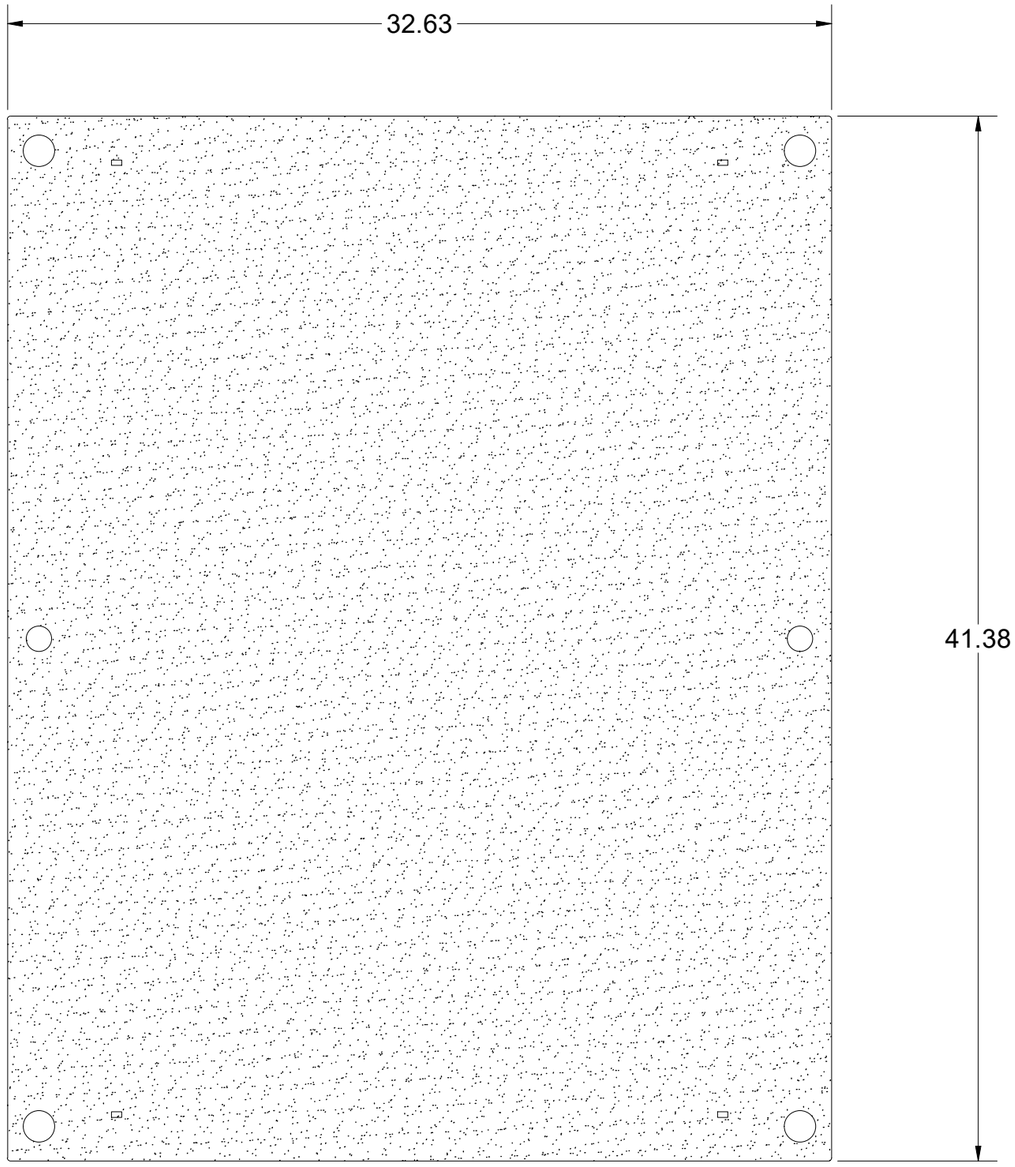

100006594.idw

BEND TABLE			
BEND RADIUS	V-OPENING	BEND ANGLE	BEND DEDUCTION
-	-	- 0	-

MATERIAL IFS: 100007821

MATERIAL THK: 0.1875

MAT DESCRIPTION: SHT STL GR80 SM-HRPO RAW .1875

Infrastructure
JENSEN
527 Dunn Circle, Sparks, NV 89431
775-352-2716 FAX: 755-358-8127
JENSENMETALTECH.COM

©2026 Jensen Infrastructure - All rights reserved.
All materials appearing as Jensen Infrastructure documents and the like are proprietary work product and are protected under U.S. copyright and other laws. Unless in conjunction with business conducted with Jensen Infrastructure , any use of Jensen Infrastructure work product without express, written consent is prohibited, and recipient is prohibited from distributing any and all work product to non-approved third parties under penalty of civil action.
This product shall only be produced in a Jensen Infrastructure facility.

NAME & DESCRIPTION: 200118910
Door Component Steel Plate, Top

REV: A-2

WEIGHT: 71.415 lbmass

DRAWN BY: R. Dohr

CREATED: 5/8/2026

MODIFIED: 6/5/2026

SHEET: 10 OF 10