DESIGN NOTES
■ DESIGNED IN ACCORDANCE WITH H-20-44 BRIDGE LOADING USING 5,500 PSI COMPRESSIVE STRENGTH CONCRETE AND 60,000 PSI YIELD STRENGTH ASTM A-706 STEEL REINFORCEMENT PER CALCS. #32362.
■ ALL PARTS TO BE STENCILED: MFG DATE / JOB NUMBER / PRODUCT ID / WEIGHT.

BILL OF MATERIALS

ITEM	UNIT QTY	QTY	PART NUMBER	DESCRIPTION
1	14.329 ft^3	14.329 ft^3	100024079	CONCRETE #19 SCC
2	1	4	100002870	ANCHOR DOGBONE P52 2T X 6-3/4" GALV
3	1	2	100002867	ANCHOR DOGBONE P52 2T X 3-3/8" GALV
4	1	1	100006672	FAS-2424-C-G-FONT
5	1	4	100008114	INSERT THREADED METAL 1/2-13 UNC 1-1/2 IN OPEN
6	1	1	100005912	PULL IRON OFFSET .875DIA 3.375 IH X 12.125L X 6.5W GALV
7	1	1	300155265	REINFORCING MAT 300155265

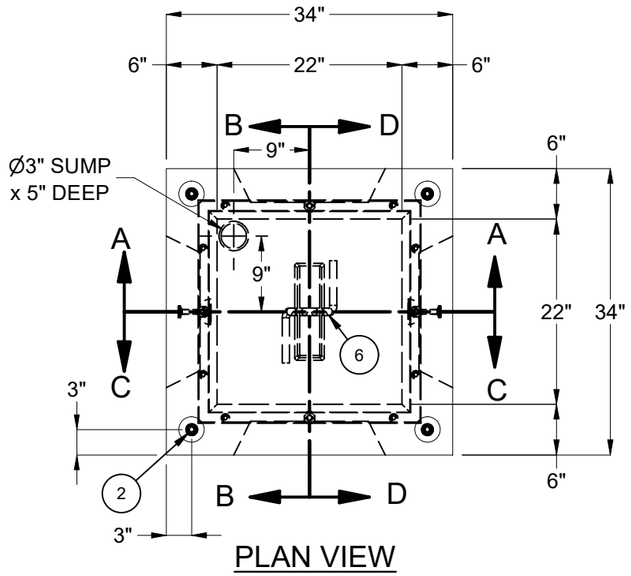

PLAN VIEW

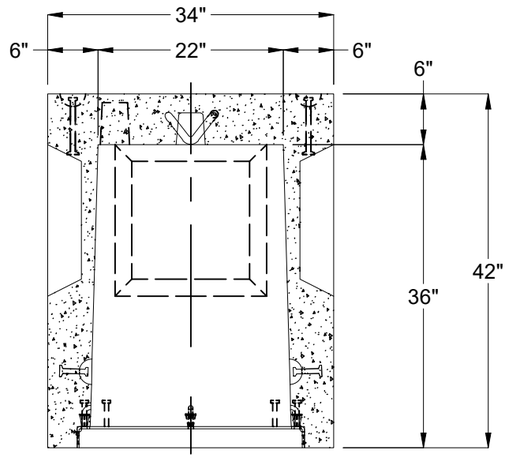

SECTION A-A

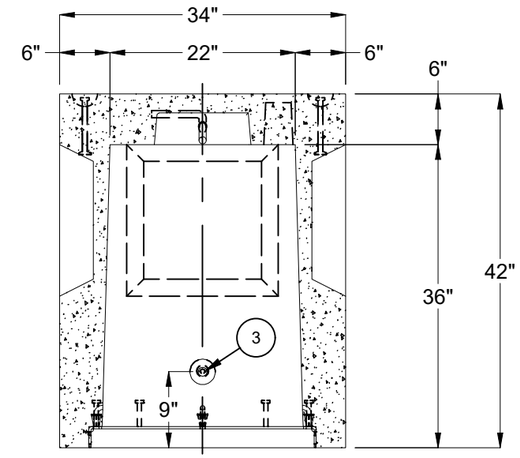

SECTION B-B

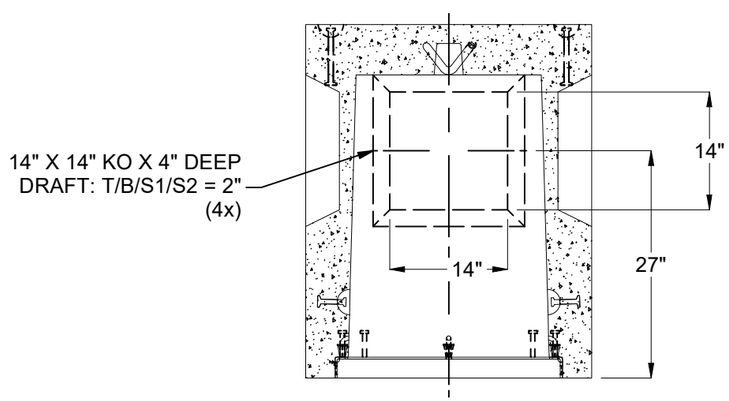

SECTION C-C

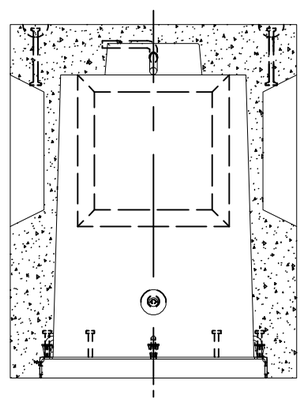

SECTION D-D

LIFTING NOTES
■ INSTALLATION: THIS CONCRETE PRODUCT IS DESIGNED TO BE LIFTED AT 5500 PSI WITH 2 LIFT CONNECTIONS EQUALLY LOADED TO 2 LIFTING POINTS AT A MINIMUM 60° SLING ANGLE, MEASURED FROM HORIZONTAL.
■ DEMOLDING: THIS CONCRETE PRODUCT IS DESIGNED TO BE LIFTED AT 2500 PSI WITH 4 LIFT CONNECTIONS EQUALLY LOADED TO 4 LIFTING POINTS AT A MINIMUM 90° SLING ANGLE, MEASURED FROM HORIZONTAL.
*All rigging shall be design by a qualified professional. Loading diagrams show illustrations of possible rigging setups to achieve the required sling angle and load leg equalization. Other valid rigging configurations are possible. A qualified professional must be consulted prior to lifting.

RIGGING DIAGRAMS*

INSTALLATION	F	DEMOLDING	E

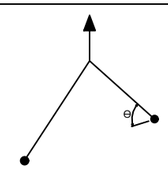

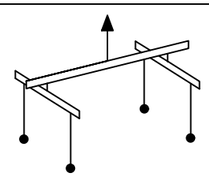

BURY DEPTH:	0.0' - 0.0' to Top		
WATER LEVEL:	3.0'	APPROX. WEIGHT:	2166.33 Lbs
DESIGN SPEC:	ACI 318,ASTM C857	LOADING SPEC:	A-16 (AASHTO HS20-44)
REINFORCEMENT TYPE:	Rebar	LIFTING TYPE:	Dogbone

JENSEN PRECAST EST. 1968

WWW.JENSENPRECAST.COM

©2024 Jensen Precast- All rights reserved.
All materials appearing as Jensen Precast documents and the like are proprietary work product and are protected under U.S. copyright and other laws.
Unless in conjunction with business conducted with Jensen Precast, any use of Jensen Precast work product without express, written consent is prohibited, and recipient is prohibited from distributing any and all work product to non-approved third parties under penalty of civil action.

REVISION HISTORY

REV	DESCRIPTION	DATE	APPROVED
B-1	INITIAL RELEASE INVENTOR	3/27/2024	

DESCRIPTION:	Vault 2424x36 Rect. Bottom Section Knockout Sump Cast-In Frame CASTING LAYOUT		REV: B-1
PART NUMBER:	100006577	DRAWN BY:	J. Prado
CREATED:	8/16/2019	MODIFIED:	3/27/2024
			SHEET: 1 OF 1

100006577.idw