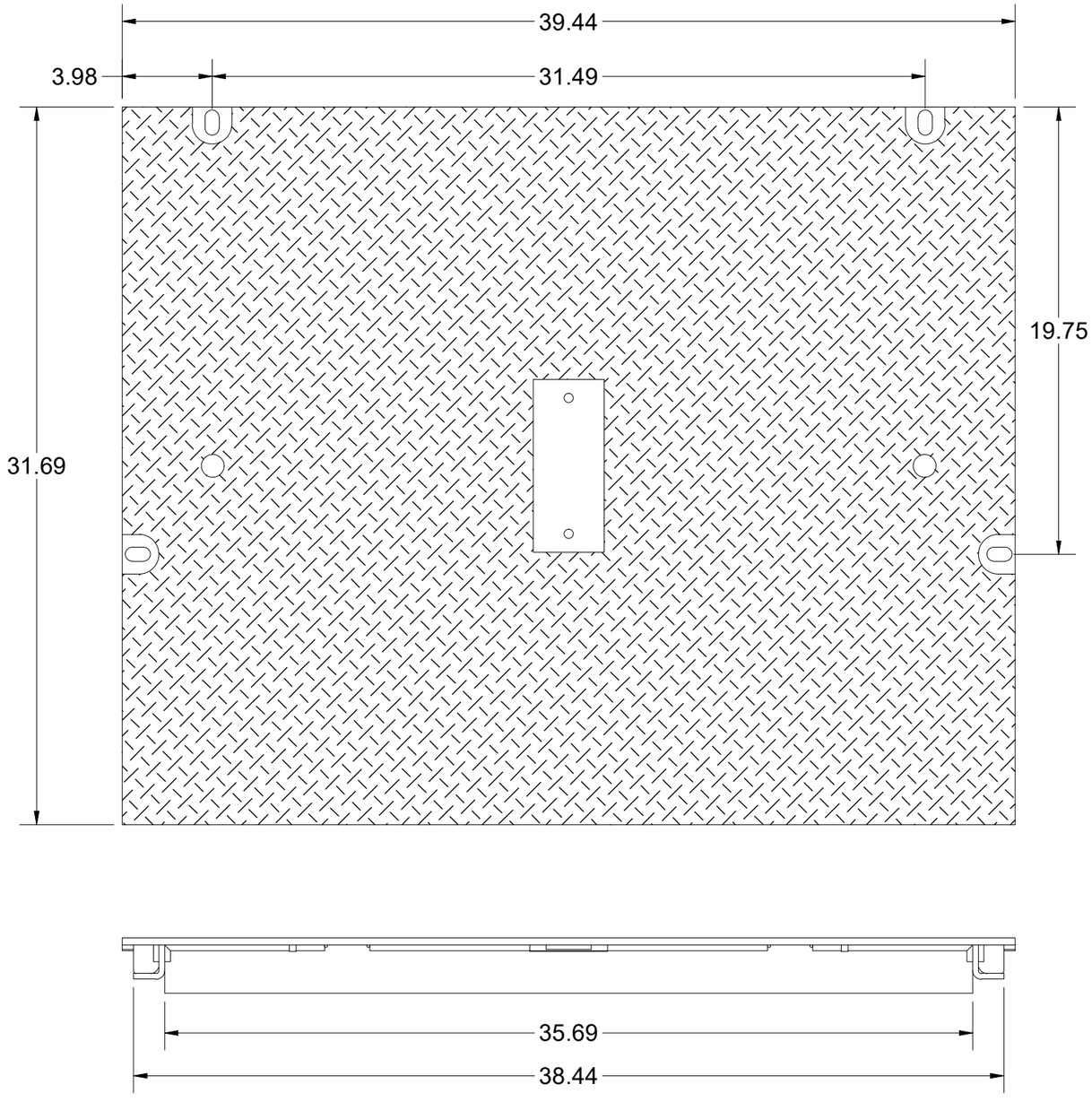

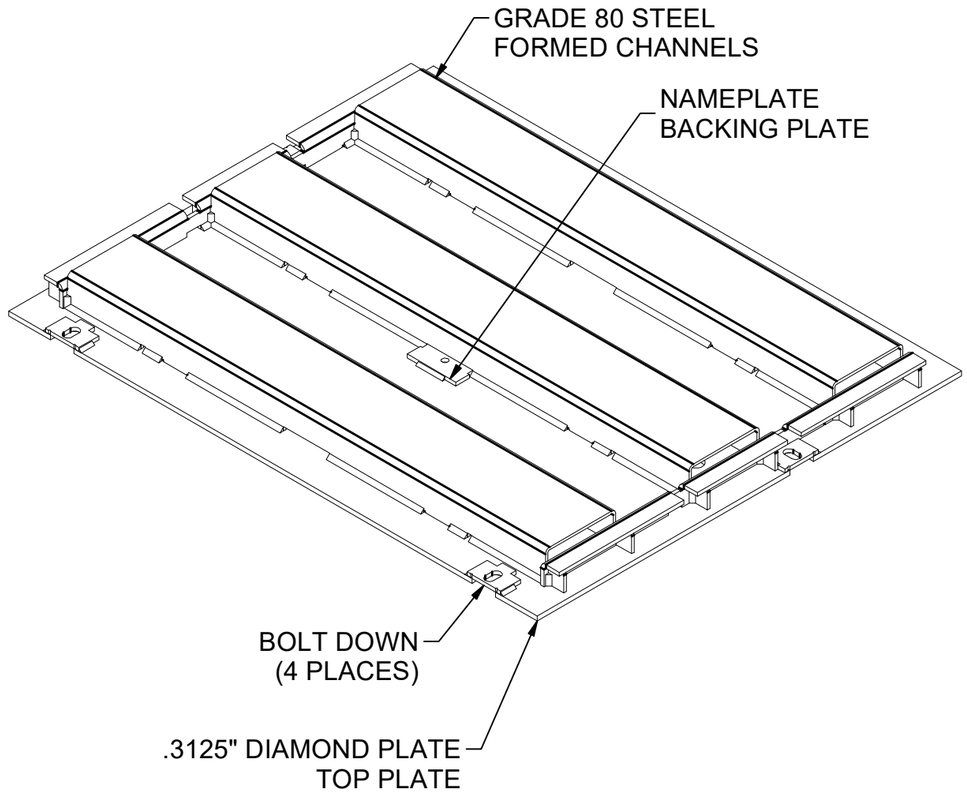

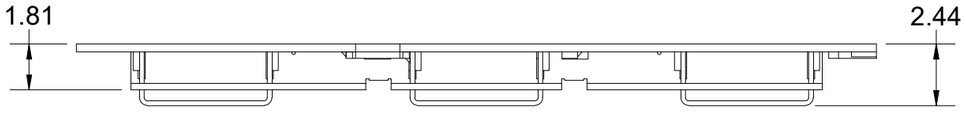

DESIGNED FOR ROBOT WELDING

LOADING CRITERIA: ASTM C1802 Load Level 05

16,000 lb load on 10" x 20" footprint, with 30% impact restricted to unrestricted parking lanes and alleyways where traffic speed is limited to 15 miles per hour.

SURFACE:	Diamond Plate	FINISH:	Galvanized
WEIGHT:	181.67 lbs	MARKING:	As Noted

Infrastructure
JENSEN
527 Dunn Circle, Sparks, NV 89431
775-352-2716 FAX: 755-358-8127
JENSENMETALTECH.COM

©2026 Jensen Infrastructure - All rights reserved. All materials appearing as Jensen Infrastructure documents and the like are proprietary work product and are protected under U.S. copyright and other laws. Unless in conjunction with business conducted with Jensen Infrastructure , any use of Jensen Infrastructure work product without express, written consent is prohibited, and recipient is prohibited from distributing any and all work product to non-approved third parties under penalty of civil action. This product shall only be produced in a Jensen Infrastructure facility.

DESCRIPTION:	DAS1-T-3660-D5-DP-G-BD-FONT-(SC3660-T)		
	36x60 Standard Door Assembly (ASTM C1802 Load Level 05, Top Door, Steel, Drop In, Handle (2 Per Door), Diamond Plate, Galvanized, N/A (SC3660-T))		
PART NUMBER:	100006541	DRAWN BY:	M. Newman
CREATED:	6/9/2025	MODIFIED:	6/11/2026

REV: A-5

SHEET: 1

100006541.idw

BILL OF MATERIALS

ITEM	ITEM QTY	QTY	PART NUMBER	DESCRIPTION	PART NAME
1	1	116.440 lbmass	100007824	Door Component Steel Plate, Bottom	200102183
2	3	51.537 lbmass	100007821	Door Component Steel Stiffener, Plate	200102187
3	2	9.047 lbmass	100007735	Door Component Steel Side Bar, Trough	200102192
4	4	0.999 lbmass	100007735	Recessed Boltdown Plate, 1.5" X 3" X 1/4", Steel	200119587
5	1	1	100007685	NAME PLATE BACKING PLATE	100007685



FLIP THIS WELD
TO AVOID BLOCKING
BOLTDOWN PLATE

VIEW C-C
SCALE 1/7

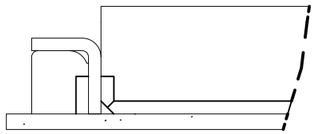

SECTION B-B

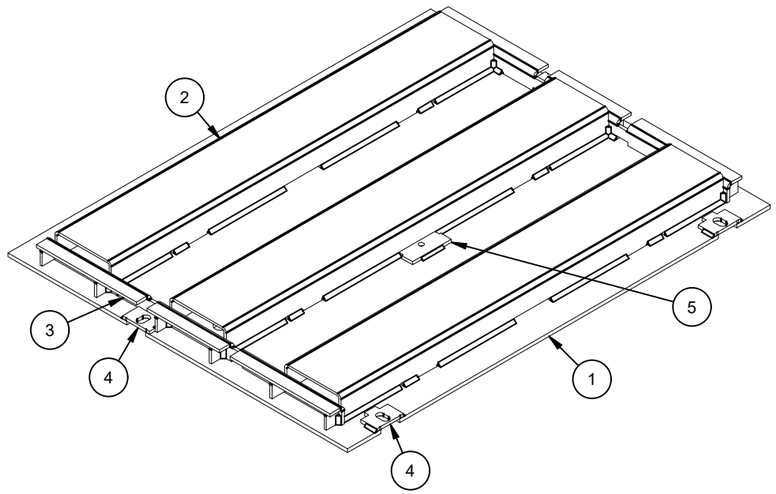

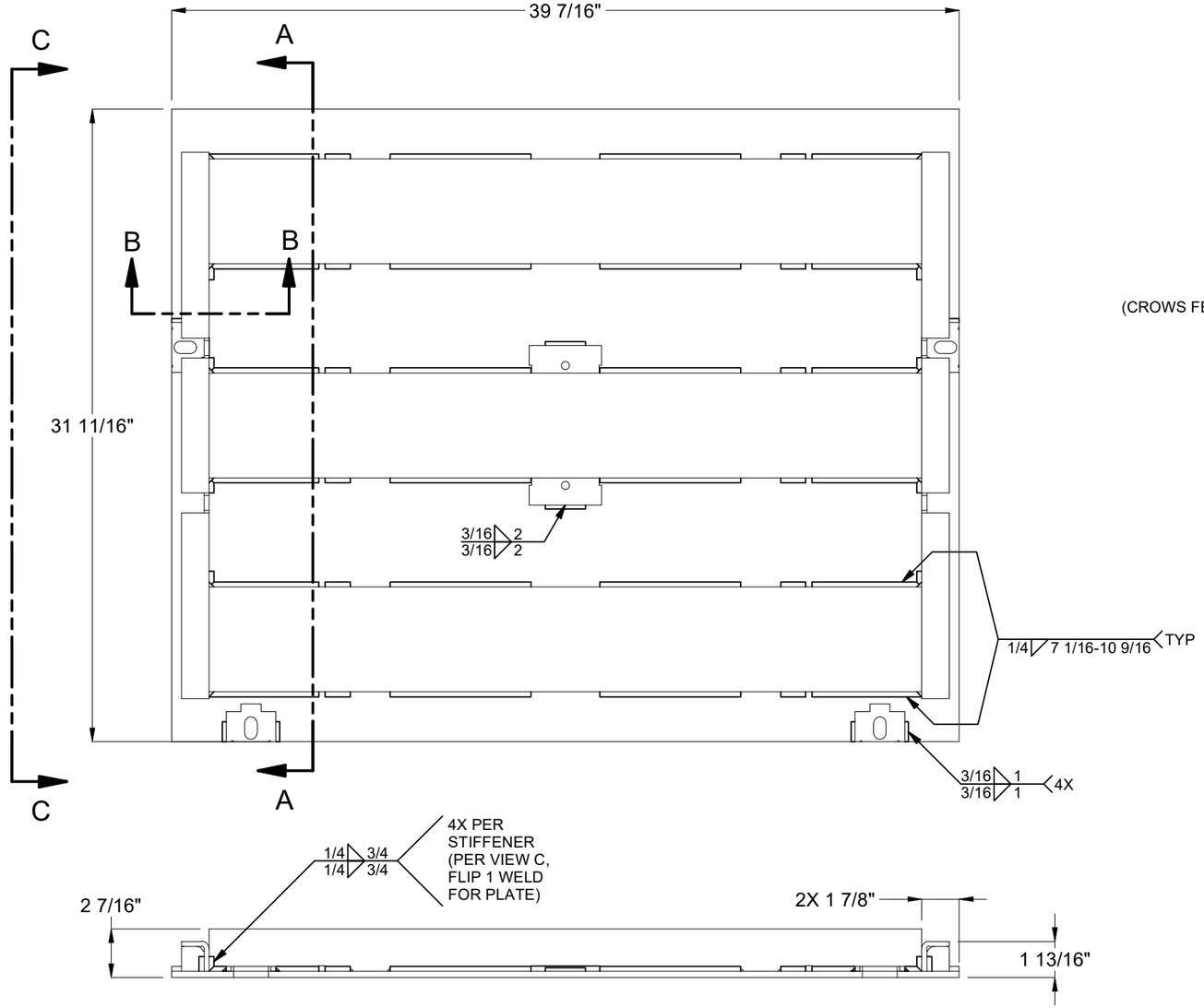

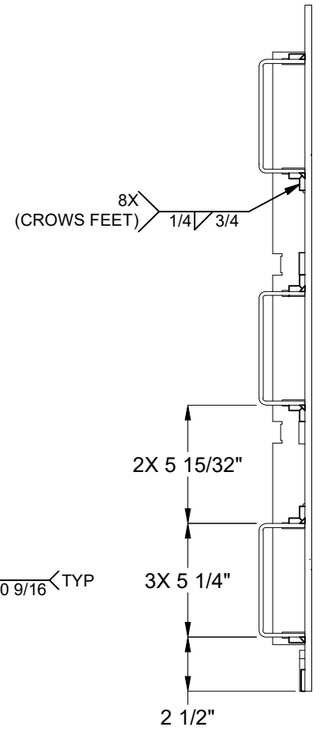

SECTION A-A
SCALE 1/7

100006541.idw

DESIGNED FOR ROBOT WELDING

REVISION HISTORY		
DESCRIPTION	DATE	REVISED BY
57129-7: UPDATED DESIGN TO FIT CALCS IN FOLDER. UPDATED DRAWING.	6/12/2025	COLLIN HEYWOOD
57129-7: SWAPPED BOLT DOWNS TO 1.5"	5/27/2026	R. DOHR
UPDATED WELDS; ADDED INDICATORS; CHANGED TO LL 5	6/11/2026	M. Newman

MATERIAL FINISH: Galvanized

MATERIAL SURFACE: Diamond Plate

Infrastructure JENSEN
527 Dunn Circle, Sparks, NV 89431
775-352-2716 FAX: 755-358-8127
JENSENMETALTECH.COM

©2026 Jensen Infrastructure - All rights reserved. All materials appearing as Jensen Infrastructure documents and the like are proprietary work product and are protected under U.S. copyright and other laws. Unless in conjunction with business conducted with Jensen Infrastructure , any use of Jensen Infrastructure work product without express, written consent is prohibited, and recipient is prohibited from distributing any and all work product to non-approved third parties under penalty of civil action. This product shall only be produced in a Jensen Infrastructure facility.

PART NUMBER & DESCRIPTION: 100006541 DAS1-T-3660-D5-DP-G-BD-FONT-(SC3660-T)

REV: A-5

WEIGHT: 181.67 Lbs

DRAWN BY: M. Newman

SHEET: 2

CREATED: 6/9/2025

MODIFIED: 6/11/2026

BURN LIST - BOM

PART NAME	ITEM QTY	QTY	DESCRIPTION	STOCK NUMBER	MATERIAL	MASS	SHEET
200102183	1	116.440 lbmass	Door Component Steel Plate, Bottom	100007824	SHT STL CQ DP RAW .3125 - 36 KSI YIELD	116.440 lbmass	04
200102187	3	51.537 lbmass	Door Component Steel Stiffener, Plate	100007821	SHT STL GR80 SM-HRPO RAW .1875	17.179 lbmass	05
200102192	2	9.047 lbmass	Door Component Steel Side Bar, Trough	100007735	STL ASTM A36 SM-HRPO RAW .250	4.523 lbmass	06
200119587	4	0.999 lbmass	Recessed Boltdown Plate, 1.5" X 3" X 1/4", Steel	100007735	STL ASTM A36 SM-HRPO RAW .250	0.250 lbmass	07

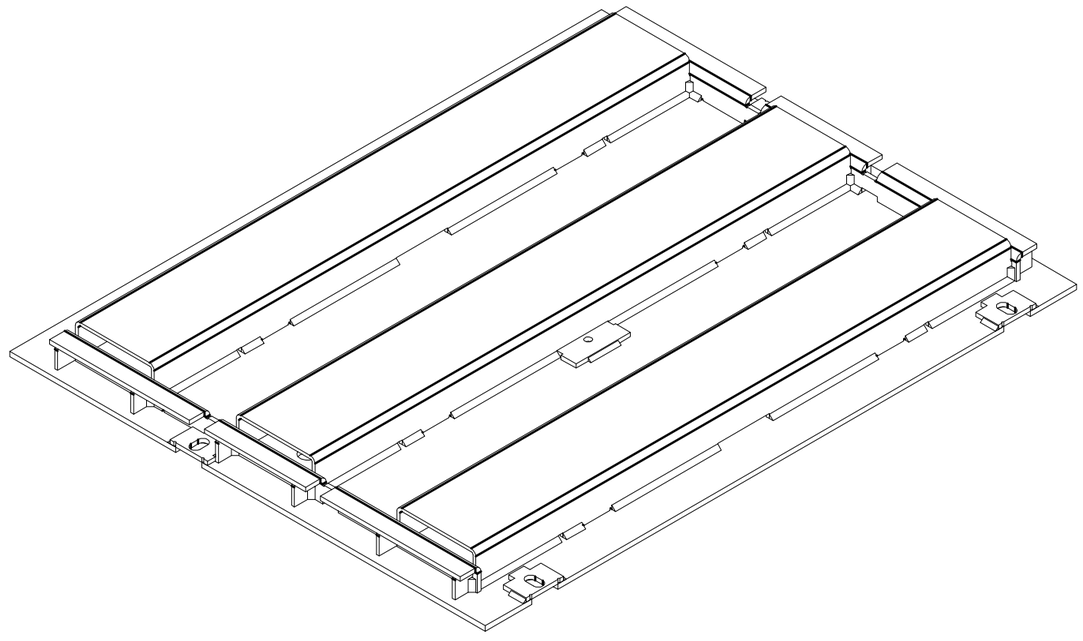

100006541.idw

MATERIAL FINISH: Galvanized

MATERIAL SURFACE: Diamond Plate

Infrastructure
JENSEN
527 Dunn Circle, Sparks, NV 89431
775-352-2716 FAX: 755-358-8127
JENSENMETALTECH.COM

©2026 Jensen Infrastructure - All rights reserved.
All materials appearing as Jensen Infrastructure documents and the like are proprietary work product and are protected under U.S. copyright and other laws. Unless in conjunction with business conducted with Jensen Infrastructure , any use of Jensen Infrastructure work product without express, written consent is prohibited, and recipient is prohibited from distributing any and all work product to non-approved third parties under penalty of civil action.
This product shall only be produced in a Jensen Infrastructure facility.

PART NUMBER & DESCRIPTION: 100006541
DAS1-T-3660-D5-DP-G-BD-FONT-(SC3660-T)

REV: A-5

WEIGHT: 181.67 Lbs

DRAWN BY: M. Newman

CREATED: 6/9/2025

MODIFIED: 6/11/2026

SHEET: 3

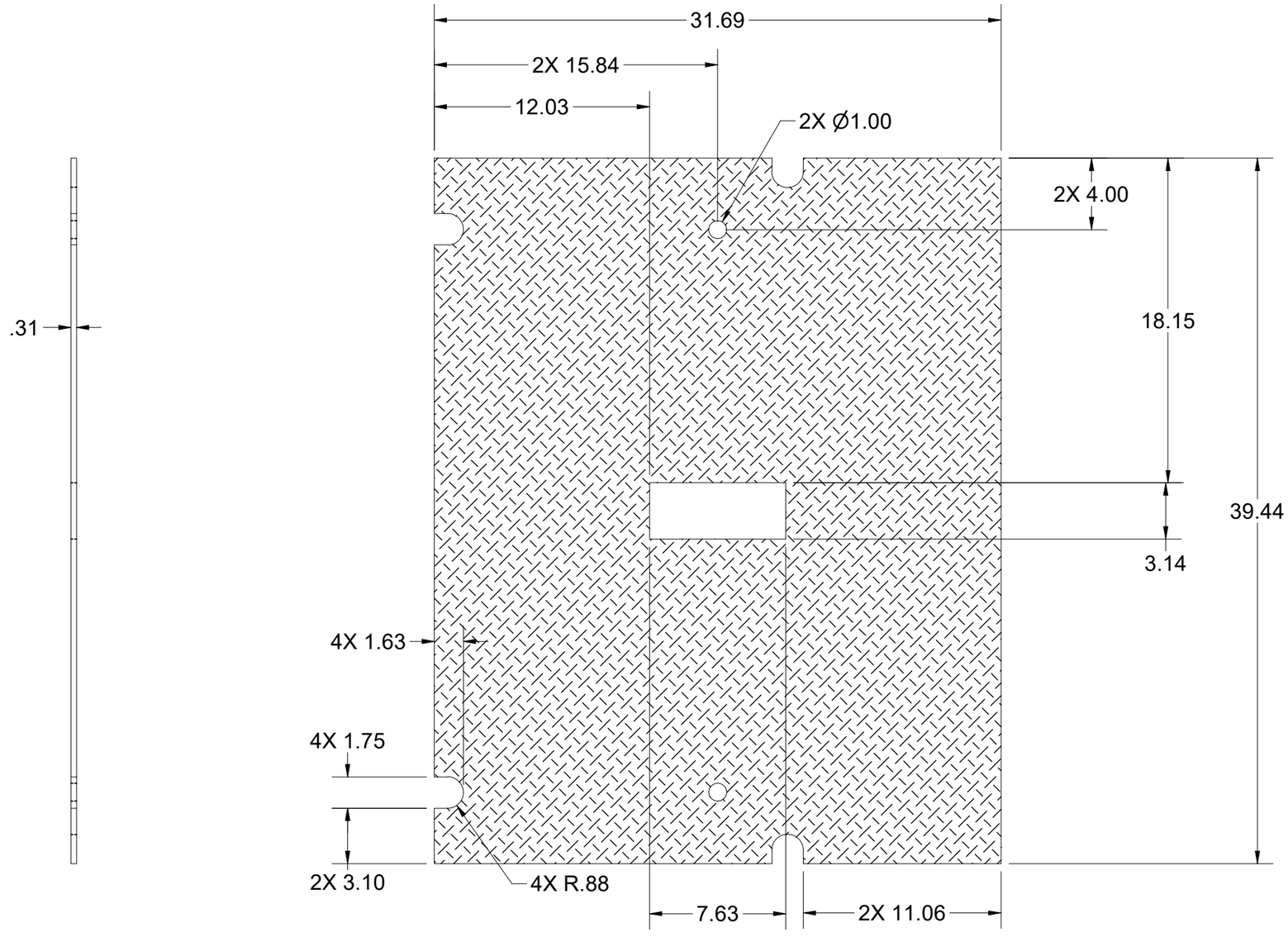

100006541.idw

BEND TABLE				MATERIAL IFS: 100007824				
BEND RADIUS	V-OPENING	BEND ANGLE	BEND DEDUCTION	MATERIAL THK: 0.3125				
-	-	- 0	-	MAT DESCRIPTION: SHT STL CQ DP RAW .3125 - 36 KSI YIELD				

Infrastructure JENSEN
527 Dunn Circle, Sparks, NV 89431
775-352-2716 FAX: 755-358-8127
JENSENMETALTECH.COM

©2026 Jensen Infrastructure - All rights reserved.
All materials appearing as Jensen Infrastructure documents and the like are proprietary work product and are protected under U.S. copyright and other laws. Unless in conjunction with business conducted with Jensen Infrastructure , any use of Jensen Infrastructure work product without express, written consent is prohibited, and recipient is prohibited from distributing any and all work product to non-approved third parties under penalty of civil action.
This product shall only be produced in a Jensen Infrastructure facility.

NAME & DESCRIPTION:	200102183 Door Component Steel Plate, Bottom	REV:
WEIGHT: 116.440 lbmass	DRAWN BY: M. Newman	SHEET: 4 OF 7
CREATED: 6/9/2025	MODIFIED: 6/11/2026	

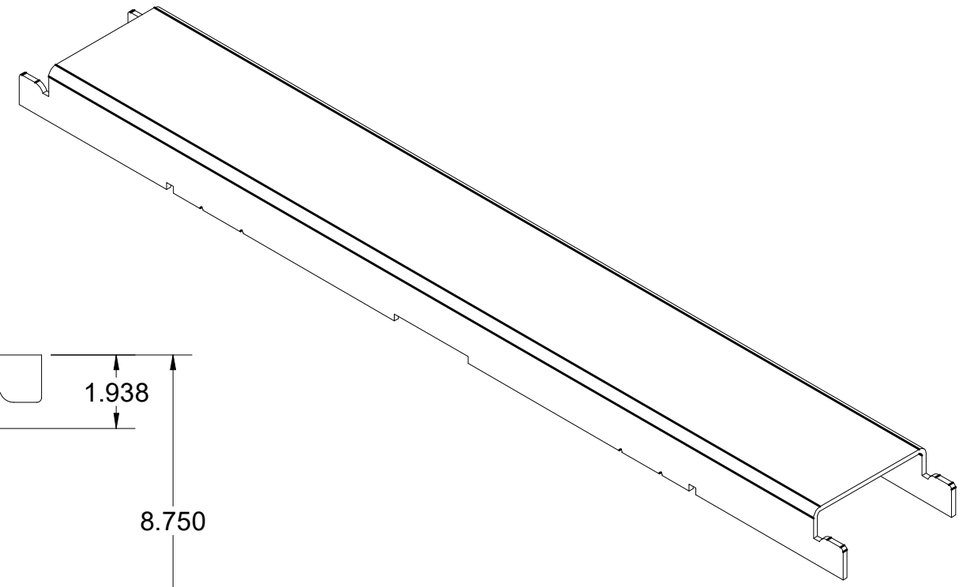

SYMMETRIC

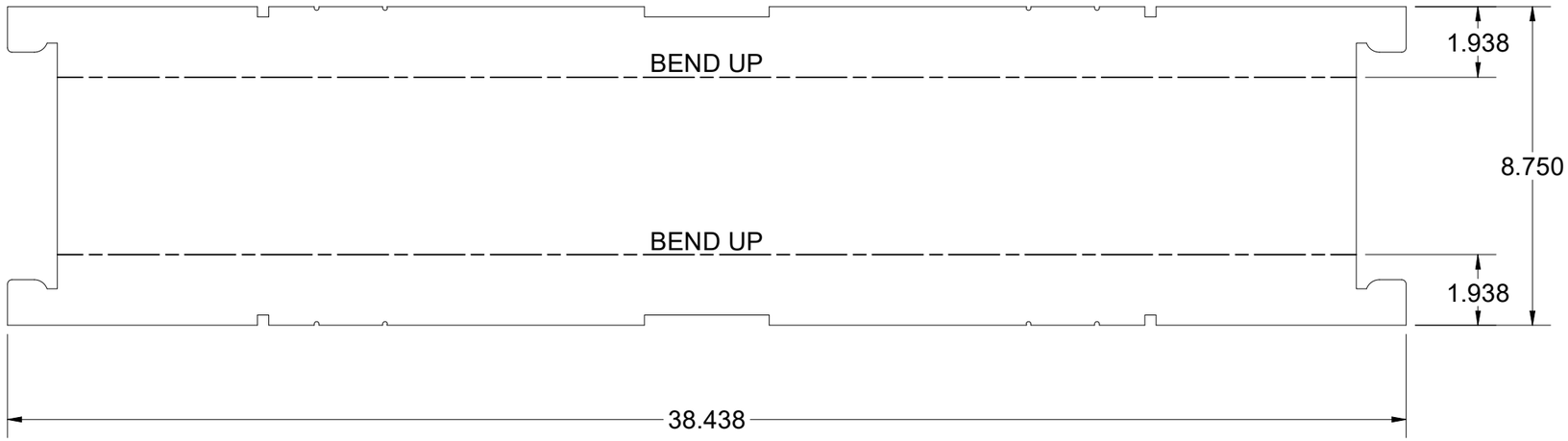





BEND TABLE				MATERIAL IFS: 100007821
BEND RADIUS	V-OPENING	BEND ANGLE	BEND DEDUCTION	MATERIAL THK: 0.1875
0.125	2	90	0.375	MAT DESCRIPTION: SHT STL GR80 SM-HRPO RAW .1875

Infrastructure JENSEN
527 Dunn Circle, Sparks, NV 89431
775-352-2716 FAX: 755-358-8127
JENSENMETALTECH.COM

©2026 Jensen Infrastructure - All rights reserved. All materials appearing as Jensen Infrastructure documents and the like are proprietary work product and are protected under U.S. copyright and other laws. Unless in conjunction with business conducted with Jensen Infrastructure , any use of Jensen Infrastructure work product without express, written consent is prohibited, and recipient is prohibited from distributing any and all work product to non-approved third parties under penalty of civil action. This product shall only be produced in a Jensen Infrastructure facility.

NAME & DESCRIPTION:	200102187 Door Component Steel Stiffener, Plate		REV:
WEIGHT: 17.179 lbmass	DRAWN BY: M. Newman		SHEET: 5 OF 7
CREATED: 6/9/2025	MODIFIED: 6/11/2026		

100006541.idw

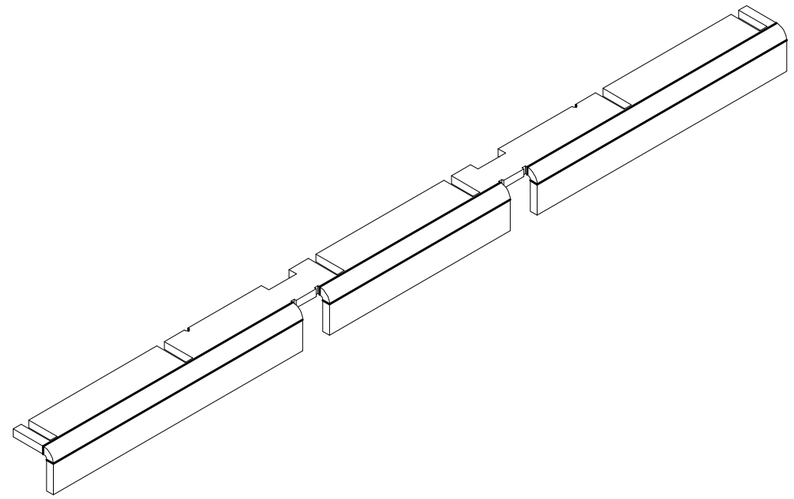

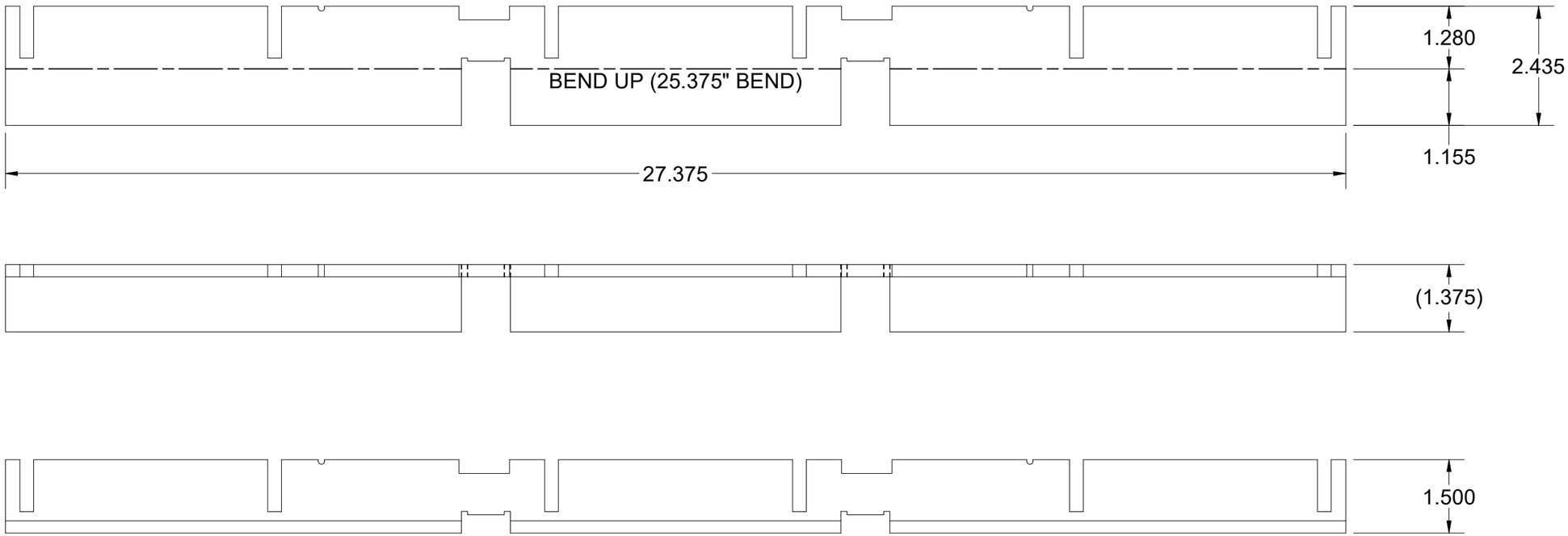

BEND TABLE				MATERIAL IFS: 100007735
BEND RADIUS	V-OPENING	BEND ANGLE	BEND DEDUCTION	MATERIAL THK: 0.25
0.125	2	90	0.44	MAT DESCRIPTION: STL ASTM A36 SM-HRPO RAW .250

Infrastructure
JENSEN
527 Dunn Circle, Sparks, NV 89431
775-352-2716 FAX: 755-358-8127
JENSENMETALTECH.COM

©2026 Jensen Infrastructure - All rights reserved.
All materials appearing as Jensen Infrastructure documents and the like are proprietary work product and are protected under U.S. copyright and other laws. Unless in conjunction with business conducted with Jensen Infrastructure , any use of Jensen Infrastructure work product without express, written consent is prohibited, and recipient is prohibited from distributing any and all work product to non-approved third parties under penalty of civil action.
This product shall only be produced in a Jensen Infrastructure facility.

NAME & DESCRIPTION: 200102192 Door Component Steel Side Bar, Trough		REV: A-5
WEIGHT: 4.523 lbmass	DRAWN BY: M. Newman	SHEET: 6 OF 7
CREATED: 6/9/2025	MODIFIED: 6/11/2026	

100006541.idw

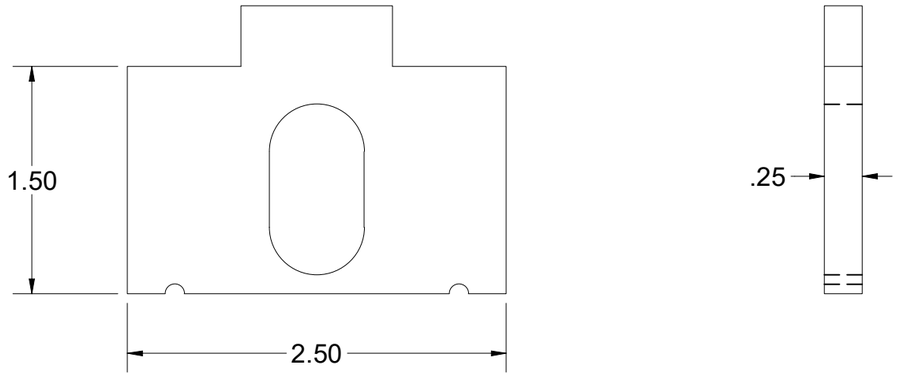

BEND TABLE				MATERIAL IFS: 100007735			
BEND RADIUS	V-OPENING	BEND ANGLE	BEND DEDUCTION	MATERIAL THK: 0.25			
-	-	- 0	-	MAT DESCRIPTION: STL ASTM A36 SM-HRPO RAW .250			

Infrastructure
JENSEN
527 Dunn Circle, Sparks, NV 89431
775-352-2716 FAX: 755-358-8127
JENSENMETALTECH.COM

©2026 Jensen Infrastructure - All rights reserved.
All materials appearing as Jensen Infrastructure documents and the like are proprietary work product and are protected under U.S. copyright and other laws. Unless in conjunction with business conducted with Jensen Infrastructure , any use of Jensen Infrastructure work product without express, written consent is prohibited, and recipient is prohibited from distributing any and all work product to non-approved third parties under penalty of civil action.
This product shall only be produced in a Jensen Infrastructure facility.

NAME & DESCRIPTION: 200119587 Recessed Boltdown Plate, 1.5" X 3" X 1/4", Steel		REV: A-5
WEIGHT: 0.250 lbmass	DRAWN BY: M. Newman	SHEET: 7 OF 7
CREATED: 6/9/2025	MODIFIED: 6/11/2026	

100006541.idw