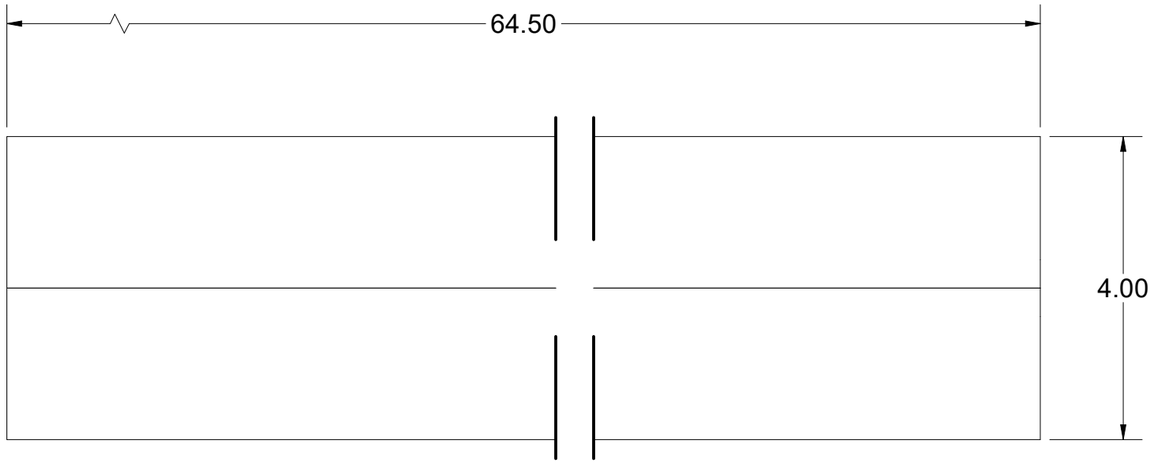

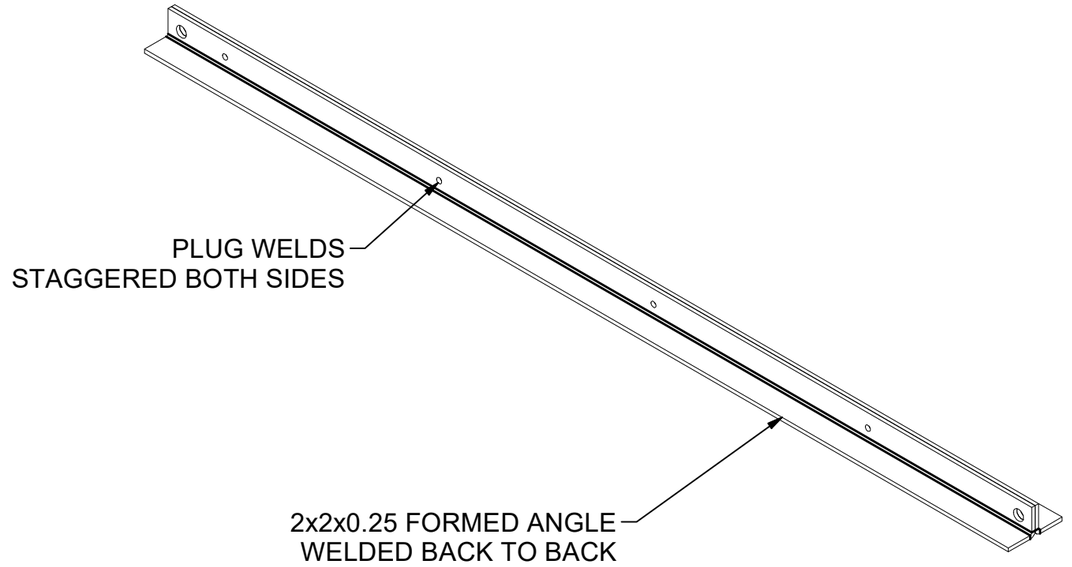

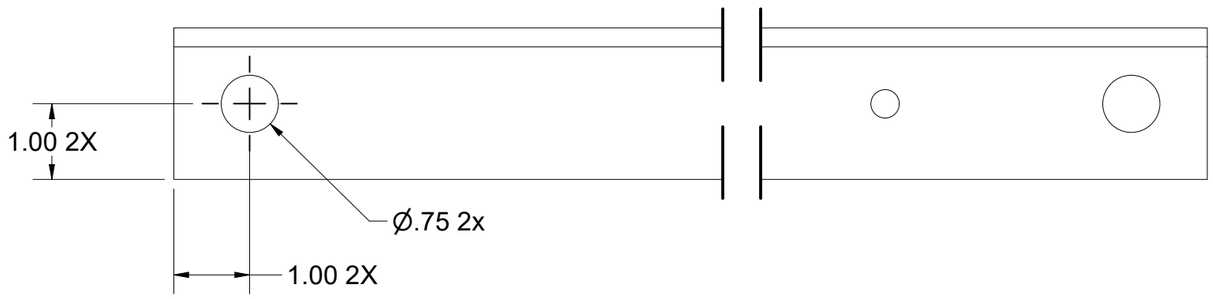

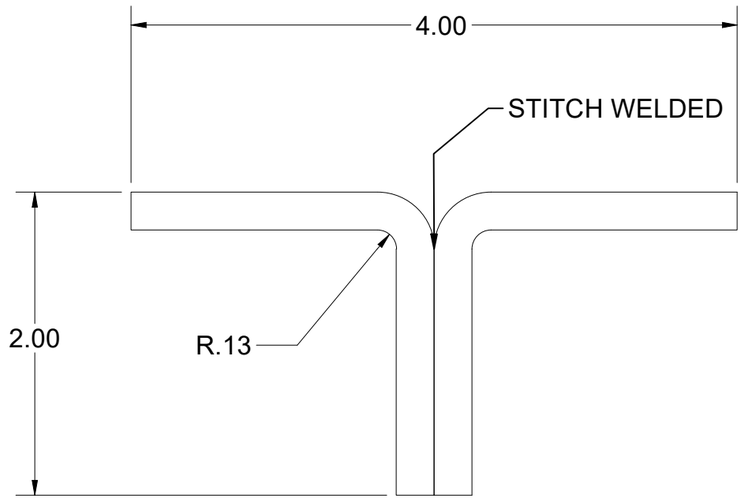

ASTM C1802:

SURFACE:	Smooth	FINISH:	Galvanized
WEIGHT:	33.18 lbs	MARKING:	

JENSEN METALTECH
450 E. GLENDALE AVE. SPARKS. NV 89431
775-352-2716 FAX: 755-358-8127
JENSENMETALTECH.COM

©2021 Jensen Precast- All rights reserved.
All materials appearing as Jensen Precast documents and the like are proprietary work product and are protected under U.S. copyright and other laws.
Unless in conjunction with business conducted with Jensen Precast, any use of Jensen Precast work product without express, written consent is prohibited, and recipient is prohibited from distributing any and all work product to non-approved third parties under penalty of civil action.

DESCRIPTION:	Support Beam 64.5in T Beam Support Beam 64.5in T Beam	REV:	A
PART NUMBER:	100006401	DRAWN BY:	T. Kosher
CREATED:		MODIFIED:	5/10/2021
		SHEET:	1

100006401.idw

BILL OF MATERIALS

ITEM	UNIT QTY	QTY	PART NUMBER	DESCRIPTION
1	1	2	200037308	2 X 2 X 0.25 64.5 BEAM ANGLE

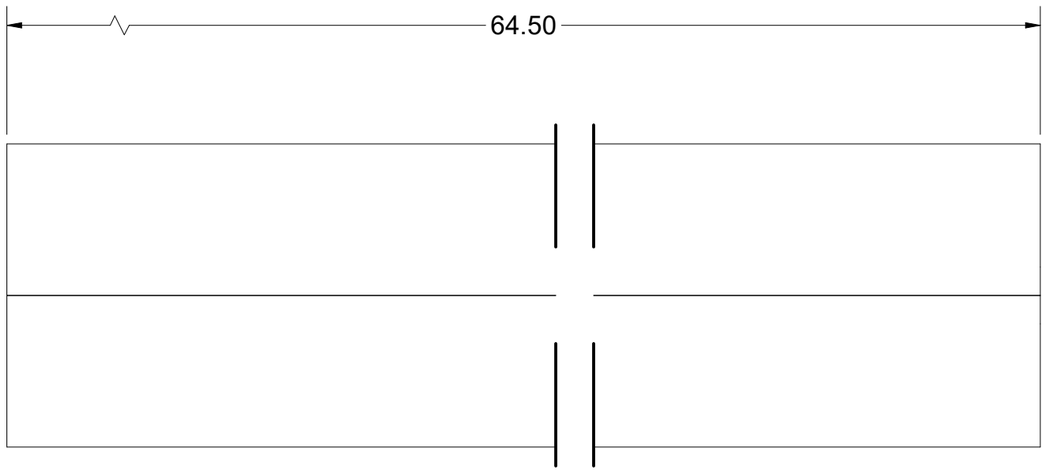

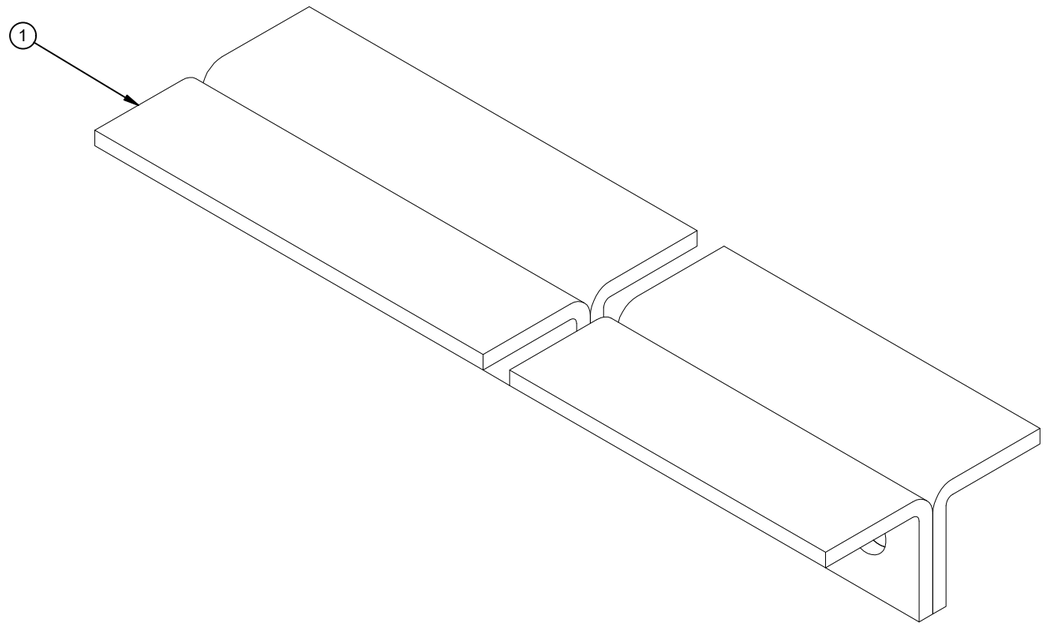

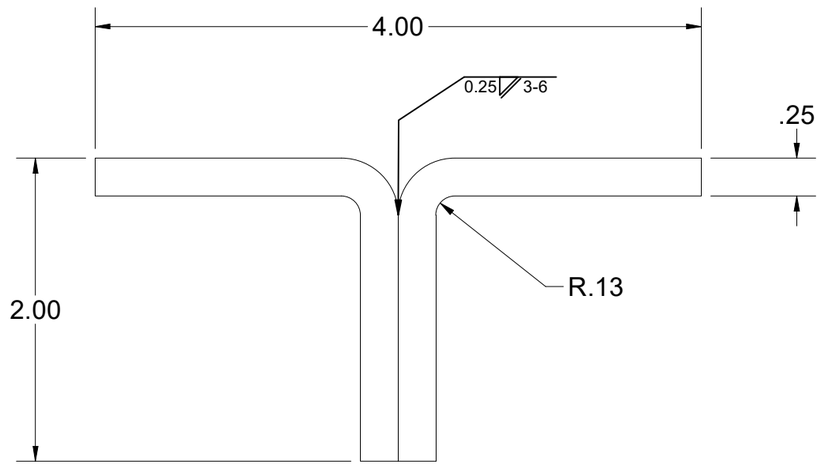

100006401.idw

MATERIAL FINISH: Galvanized	JENSEN METALTECH 450 E. GLENDALE AVE. SPARKS. NV 89431 775-352-2716 FAX: 755-358-8127 *JENSENMETALTECH.COM*	©2021 Jensen Precast- All rights reserved. All materials appearing as Jensen Precast documents and the like are proprietary work product and are protected under U.S. copyright and other laws. Unless in conjunction with business conducted with Jensen Precast, any use of Jensen Precast work product without express, written consent is prohibited, and recipient is prohibited from distributing any and all work product to non-approved third parties under penalty of civil action.	PART NUMBER & DESCRIPTION: 100006401 Support Beam 64.5in T Beam — REV: A
MATERIAL SURFACE: Smooth			WEIGHT: 33.18 Lbs — DRAWN BY: T. Kosher — SHEET: 1
			CREATED: — MODIFIED: 5/10/2021

BURN LIST - BOM

PART NUMBER	ITEM QTY	DESCRIPTION	STOCK NUMBER	MATERIAL	MASS
200037308	2	2 X 2 X 0.25 64.5 BEAM ANGLE	100007735	STL ASTM A36 SM-HRPO RAW .250	16.588 lbmass

100006401.idw

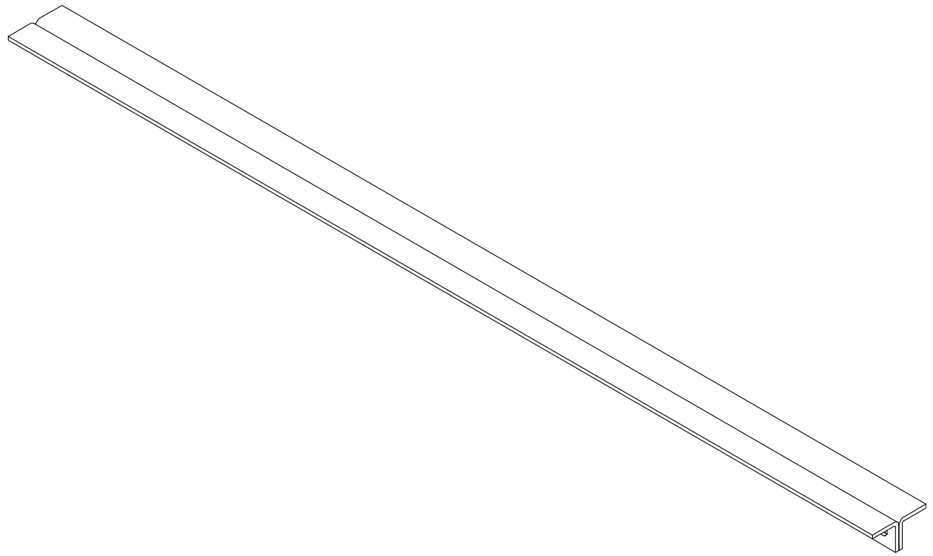

MATERIAL FINISH: Galvanized

MATERIAL SURFACE: Smooth

JENSEN METALTECH
450 E. GLENDALE AVE. SPARKS. NV 89431
775-352-2716 FAX: 755-358-8127
JENSENMETALTECH.COM

©2021 Jensen Precast- All rights reserved.
All materials appearing as Jensen Precast documents and the like are proprietary work product and are protected under U.S. copyright and other laws.
Unless in conjunction with business conducted with Jensen Precast, any use of Jensen Precast work product without express, written consent is prohibited, and recipient is prohibited from distributing any and all work product to non-approved third parties under penalty of civil action.

PART NUMBER & DESCRIPTION: 100006401 Support Beam 64.5in T Beam

REV: A

WEIGHT: 33.18 Lbs

DRAWN BY: T. Kosher

CREATED:

MODIFIED: 5/10/2021

SHEET: 2

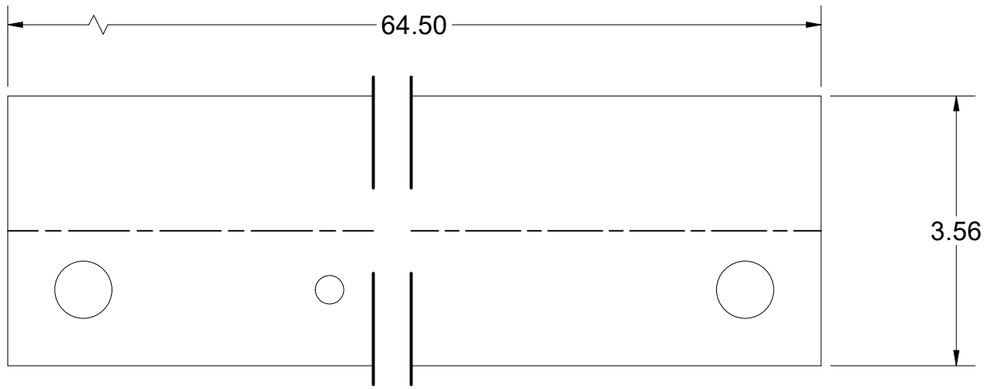

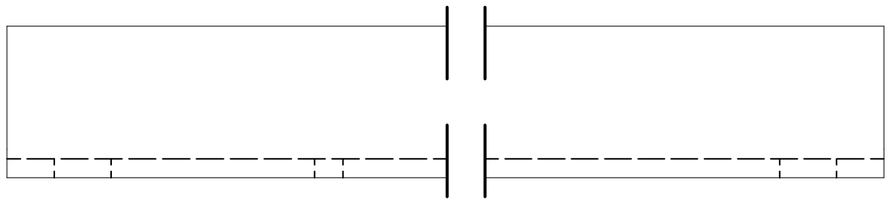

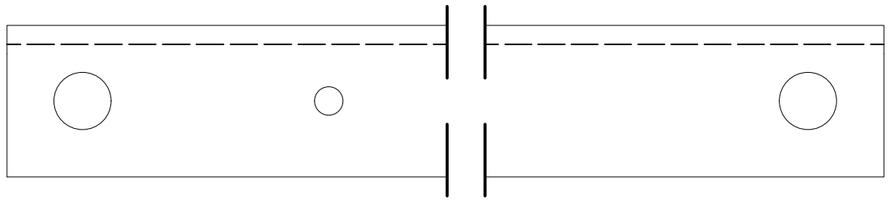

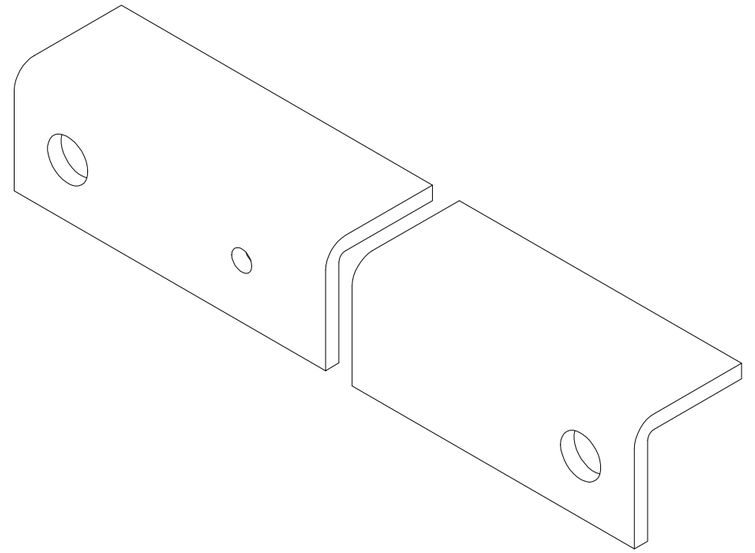

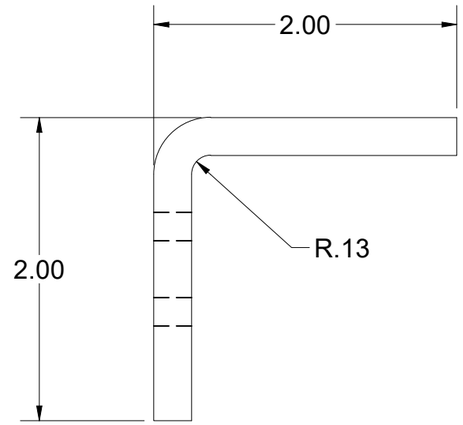

BEND TABLE			
BEND RADIUS	V-OPENING	BEND ANGLE	BEND DEDUCTION
0.125	2"	90	0.440

MATERIAL IFS: 100007735

MATERIAL THK: 0.25

MAT DESCRIPTION: STL ASTM A36 SM-HRPO RAW .250

JENSEN METALTECH
450 E. GLENDALE AVE. SPARKS. NV 89431
775-352-2716 FAX: 755-358-8127
JENSENMETALTECH.COM

©2021 Jensen Precast- All rights reserved. All materials appearing as Jensen Precast documents and the like are proprietary work product and are protected under U.S. copyright and other laws. Unless in conjunction with business conducted with Jensen Precast, any use of Jensen Precast work product without express, written consent is prohibited, and recipient is prohibited from distributing any and all work product to non-approved third parties under penalty of civil action.

NAME & DESCRIPTION: 200037308
2 X 2 X 0.25 64.5 BEAM ANGLE

REV: A

WEIGHT: 16.588 lbmass

DRAWN BY: T. Kosher

CREATED: 3/16/2020

MODIFIED: 5/10/2021

SHEET: 3 OF 3

100006401.idw