BILL OF MATERIALS

ITEM	UNIT QTY	QTY	PART NUMBER	DESCRIPTION
1	1	1	100007713	BEAM STEEL 3660-67 PMH RAW EDISON

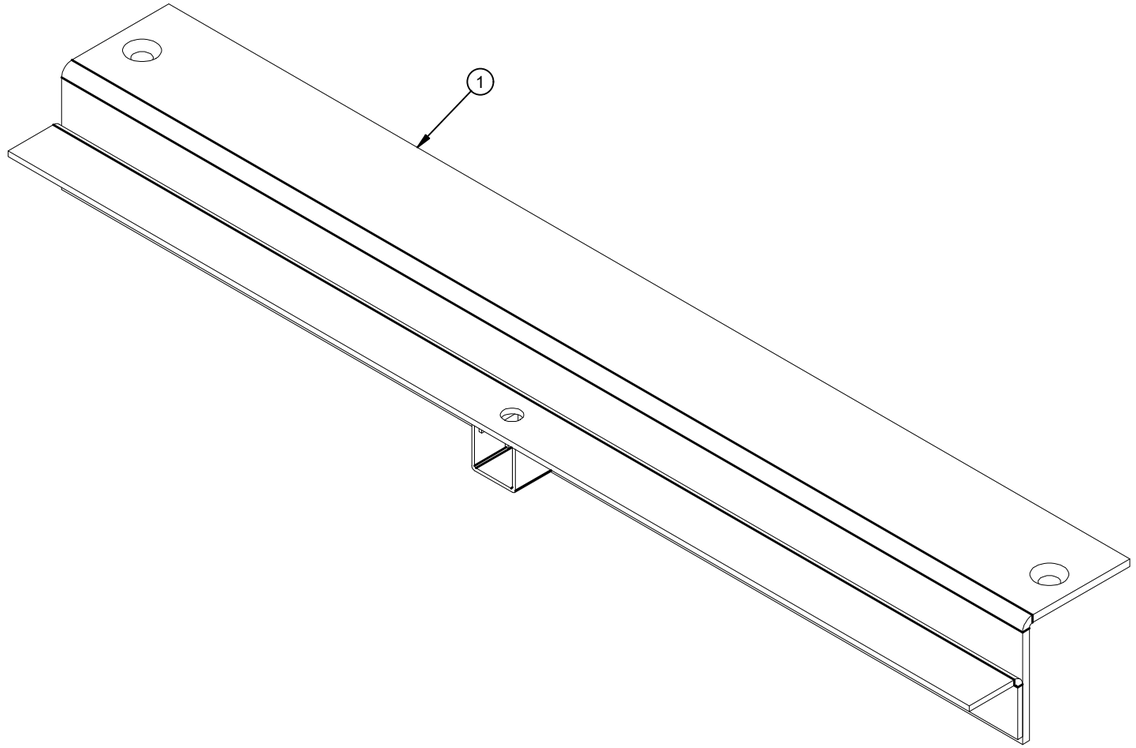

100006370.idw

MATERIAL FINISH: Galvanized	JENSEN METALTECH 450 E. GLENDALE AVE. SPARKS. NV 89431 775-352-2716 FAX: 755-358-8127 *JENSENMETALTECH.COM*	©2021 Jensen Precast- All rights reserved. All materials appearing as Jensen Precast documents and the like are proprietary work product and are protected under U.S. copyright and other laws. Unless in conjunction with business conducted with Jensen Precast, any use of Jensen Precast work product without express, written consent is prohibited, and recipient is prohibited from distributing any and all work product to non-approved third parties under penalty of civil action.	PART NUMBER & DESCRIPTION: 100006370 BEAM STEEL 3660-67 PMH GALV EDISON	REV: B-2
MATERIAL SURFACE: Smooth			WEIGHT: 26.74 Lbs / DRAWN BY: E. Massey	SHEET: 1
			CREATED: 8/30/2019 / MODIFIED: 2/4/2021	

BURN LIST - BOM

QTY	PART NUMBER	DESCRIPTION	STOCK NUMBER	MATERIAL	MASS
1	200026471	4X4X0.25 FORMED ANGLE 35.875 LONG	100007735	STL ASTM A36 SM-HRPO RAW .250	19.391 lbmass
1	200026472	2X2X0.25 35.875 LONG FORMED ANGLE	100007734	STL ASTM A36 SM-HRPO 60X120 RAW .1875	7.078 lbmass

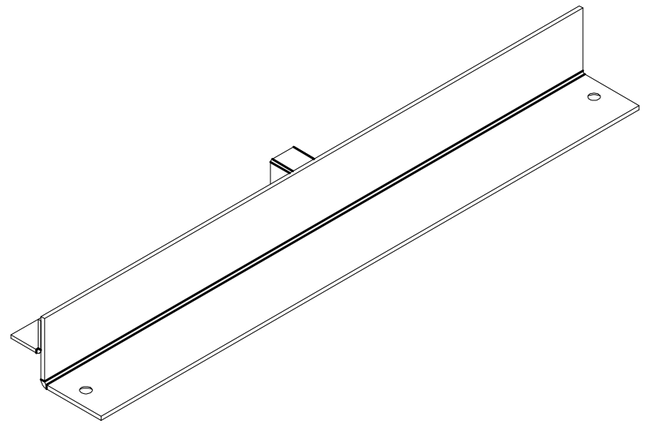

100006370.idw

MATERIAL FINISH: Galvanized

MATERIAL SURFACE: Smooth

JENSEN METALTECH
450 E. GLENDALE AVE. SPARKS. NV 89431
775-352-2716 FAX: 755-358-8127
JENSENMETALTECH.COM

©2021 Jensen Precast- All rights reserved.
All materials appearing as Jensen Precast documents and the like are proprietary work product and are protected under U.S. copyright and other laws.
Unless in conjunction with business conducted with Jensen Precast, any use of Jensen Precast work product without express, written consent is prohibited, and recipient is prohibited from distributing any and all work product to non-approved third parties under penalty of civil action.

PART NUMBER & DESCRIPTION: 100006370 BEAM STEEL 3660-67 PMH GALV EDISON

REV: B-2

WEIGHT: 26.74 Lbs

DRAWN BY: E. Massey

SHEET: 2

CREATED: 8/30/2019

MODIFIED: 2/4/2021

CUT LIST - BOM

PART NUMBER	ITEM QTY	BASE QTY	QTY	DESCRIPTION	MATERIAL	MASS
100007972	1	1.625 in	1.6250 in	STRUT C-CHANNEL 1-5/8 X 1-5/8 12GA SOLID RAW	Steel, Mild	0.2668 lbmass

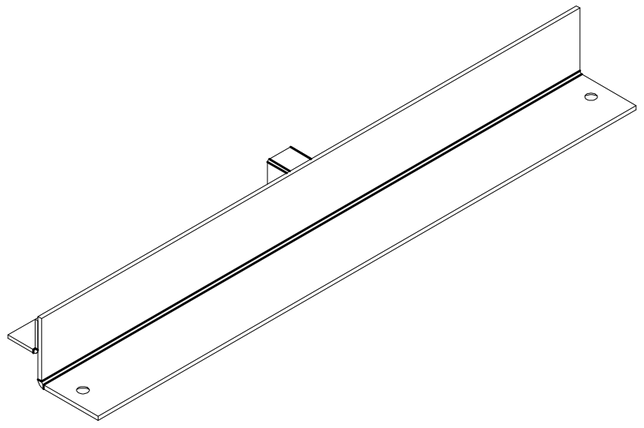

100006370.idw

MATERIAL FINISH: Galvanized

MATERIAL SURFACE: Smooth

JENSEN METALTECH
450 E. GLENDALE AVE. SPARKS. NV 89431
775-352-2716 FAX: 755-358-8127
JENSENMETALTECH.COM

©2021 Jensen Precast- All rights reserved.
All materials appearing as Jensen Precast documents and the like are proprietary work product and are protected under U.S. copyright and other laws.
Unless in conjunction with business conducted with Jensen Precast, any use of Jensen Precast work product without express, written consent is prohibited, and recipient is prohibited from distributing any and all work product to non-approved third parties under penalty of civil action.

PART NUMBER & DESCRIPTION: 100006370 BEAM STEEL 3660-67 PMH GALV EDISON

REV: B-2

WEIGHT: 26.74 Lbs

DRAWN BY: E. Massey

SHEET: 3

CREATED: 8/30/2019

MODIFIED: 2/4/2021

BILL OF MATERIALS

ITEM	UNIT QTY	QTY	PART NUMBER	DESCRIPTION
1	1	1	200026472	2X2X0.25 35.875 LONG FORMED ANGLE
2	1	1	200026471	4X4X0.25 FORMED ANGLE 35.875 LONG
3	1.6250 in	1.6250 in	100007972	STRUT C-CHANNEL 1-5/8 X 1-5/8 12GA SOLID RAW

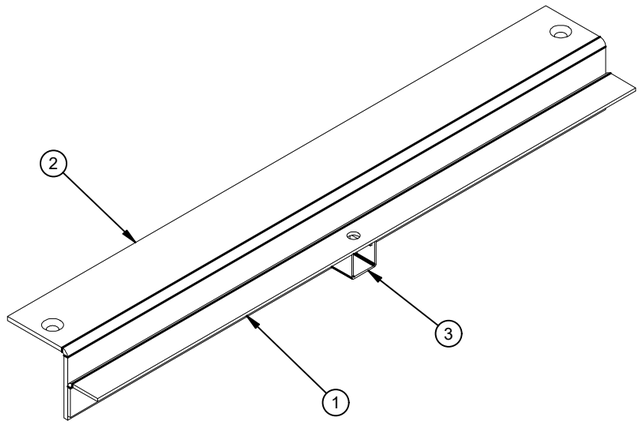

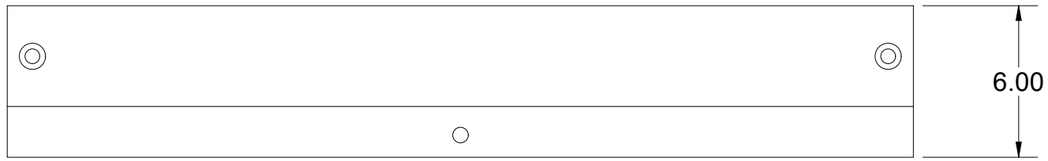

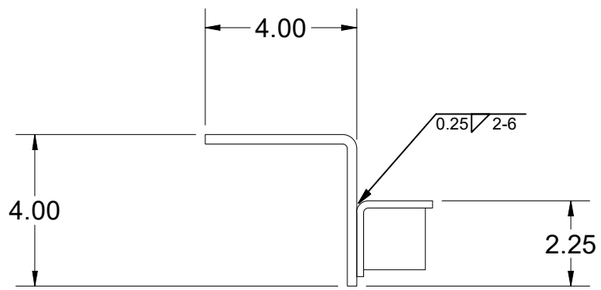

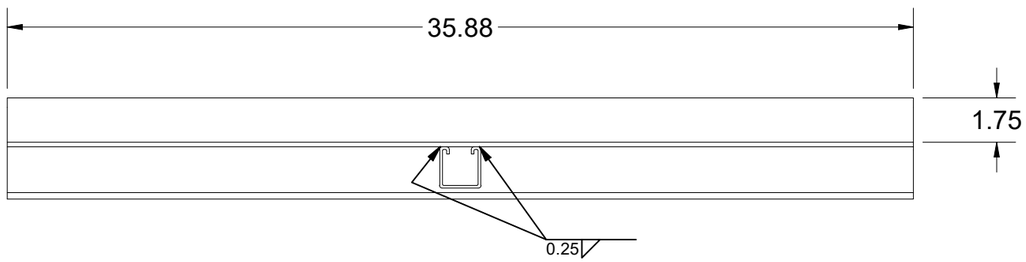

MATERIAL FINISH: Raw	JENSEN METALTECH 450 E. GLENDALE AVE. SPARKS. NV 89431 775-352-2716 FAX: 755-358-8127 *JENSENMETALTECH.COM*	©2021 Jensen Precast- All rights reserved. All materials appearing as Jensen Precast documents and the like are proprietary work product and are protected under U.S. copyright and other laws. Unless in conjunction with business conducted with Jensen Precast, any use of Jensen Precast work product without express, written consent is prohibited, and recipient is prohibited from distributing any and all work product to non-approved third parties under penalty of civil action.	PART NUMBER & DESCRIPTION: 100007713 BEAM STEEL 3660-67 PMH RAW EDISON
MATERIAL SURFACE: Smooth			WEIGHT: 26.74 Lbs / DRAWN BY: E. Massey / CREATED: 8/27/2019 / MODIFIED: 2/4/2021

REV: B-2

SHEET: 4

100006370.idw

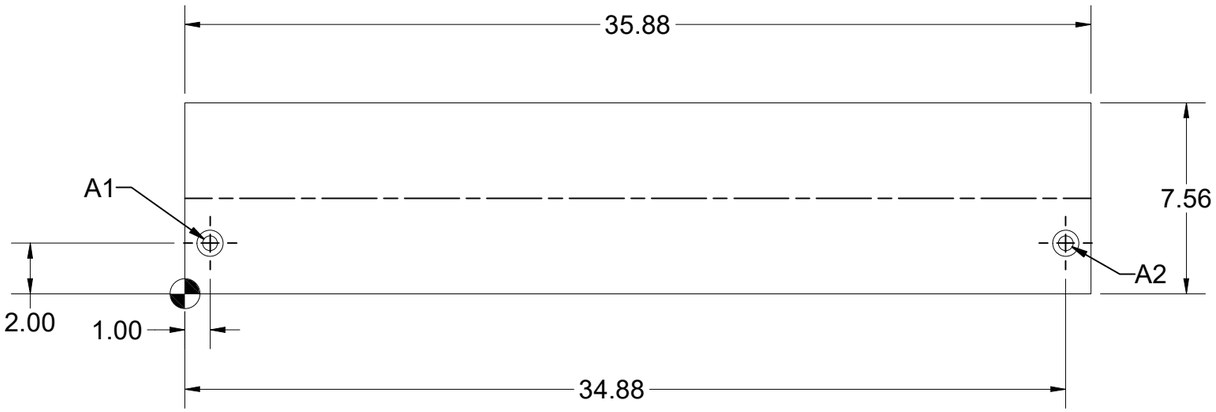

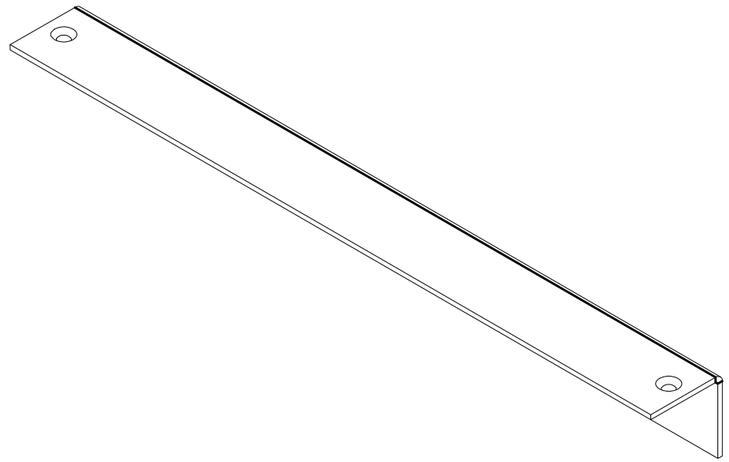

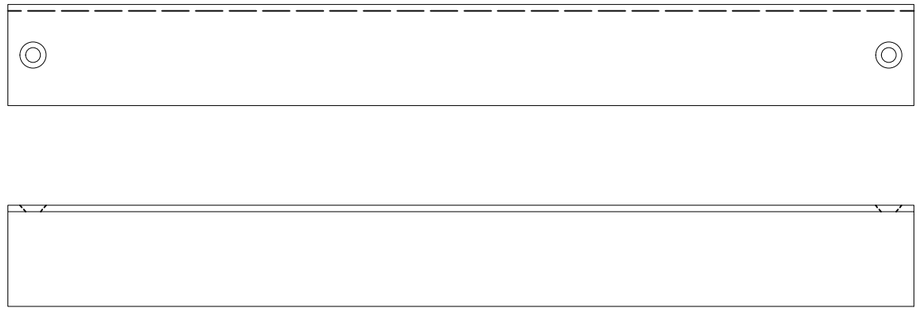

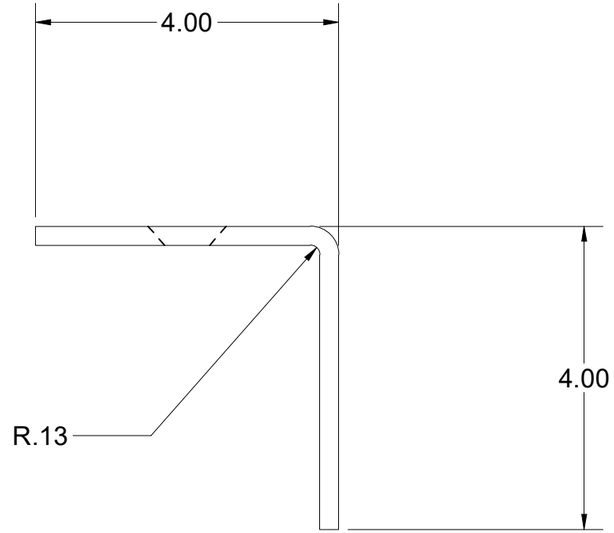

HOLE TABLE			
HOLE	XDIM	YDIM	DESCRIPTION
A1	1.00	2.00	Ø.56 THRU ⌵ Ø1.03 X 82°
A2	34.88	2.00	Ø.56 THRU ⌵ Ø1.03 X 82°

-THROUGH HOLE TO BE LASER CUT
-COUNTER SUNK TO BE DONE AT MACHINE SHOP

BEND TABLE			
BEND RADIUS	V-OPENING	BEND ANGLE	BEND DEDUCTION
0.125	2"	90	0.440

MATERIAL IFS: 100007735
MATERIAL THK: 0.25
MAT DESCRIPTION: STL ASTM A36 SM-HRPO RAW .250

JENSEN METALTECH
450 E. GLENDALE AVE. SPARKS. NV 89431
775-352-2716 FAX: 755-358-8127
JENSENMETALTECH.COM

©2021 Jensen Precast- All rights reserved.
All materials appearing as Jensen Precast documents and the like are proprietary work product and are protected under U.S. copyright and other laws.
Unless in conjunction with business conducted with Jensen Precast, any use of Jensen Precast work product without express, written consent is prohibited, and recipient is prohibited from distributing any and all work product to non-approved third parties under penalty of civil action.

NAME & DESCRIPTION: 200026471
4X4X0.25 FORMED ANGLE 35.875 LONG

REV: B-2

WEIGHT: 19.391 lbmass
DRAWN BY: E. Massey
CREATED: 8/27/2019
MODIFIED: 2/4/2021
SHEET: 5 OF 6

100006370.idw

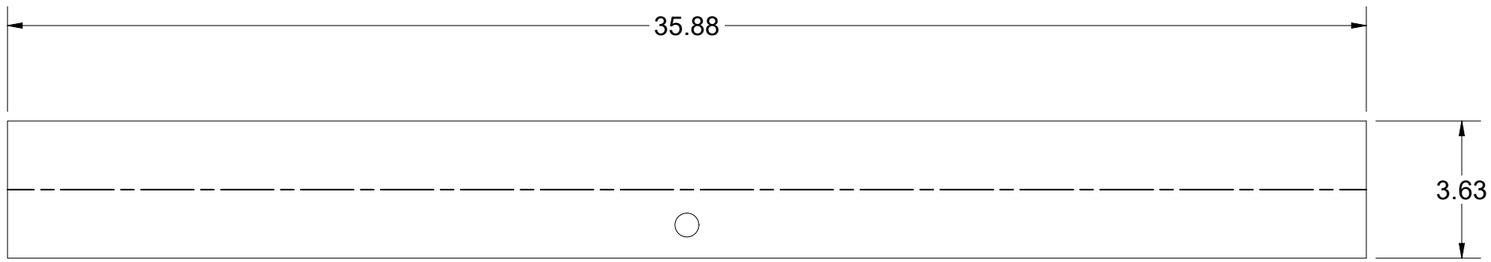

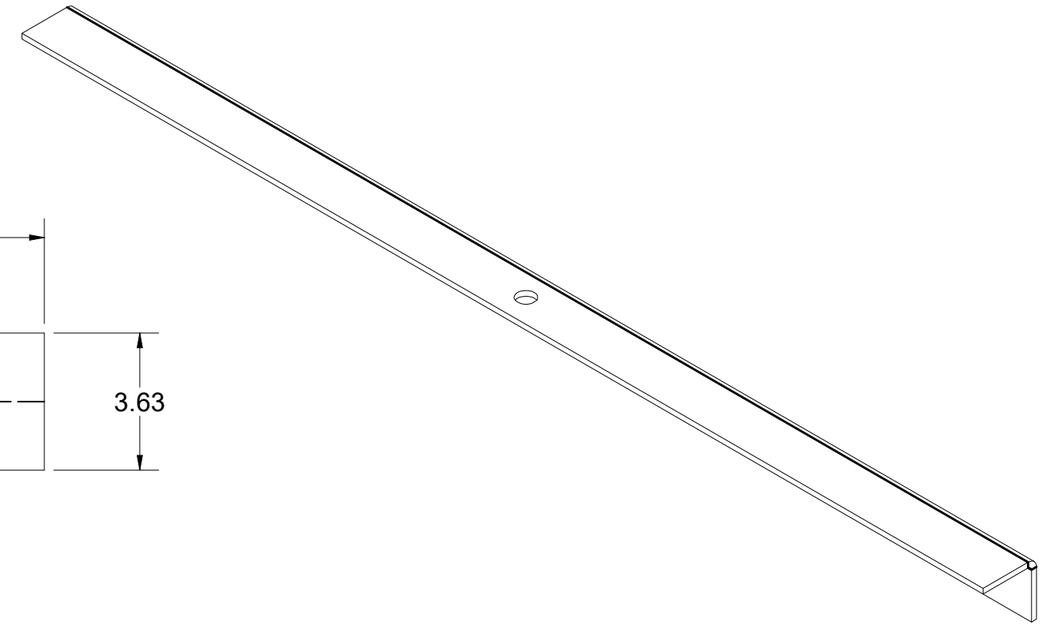

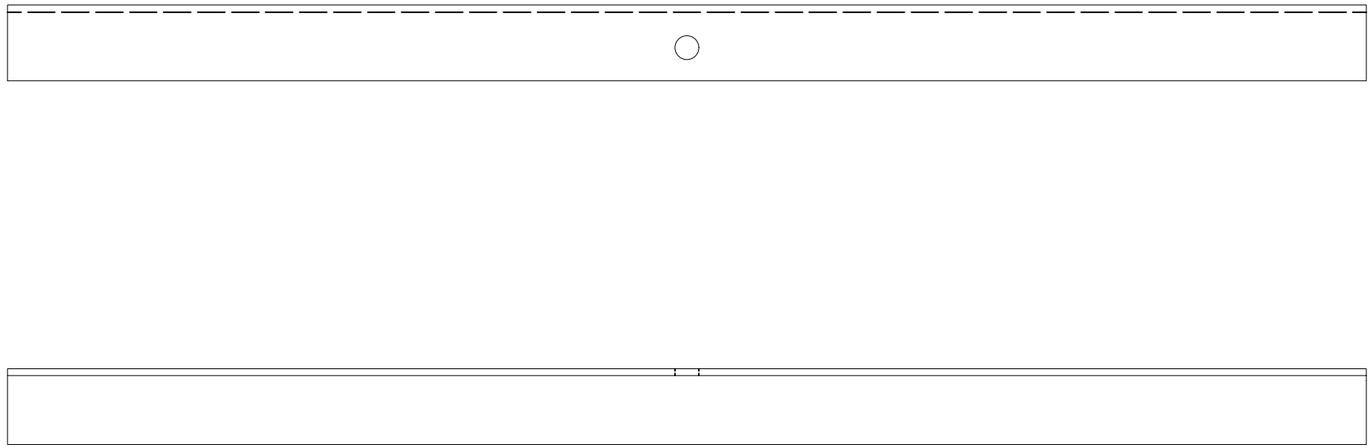

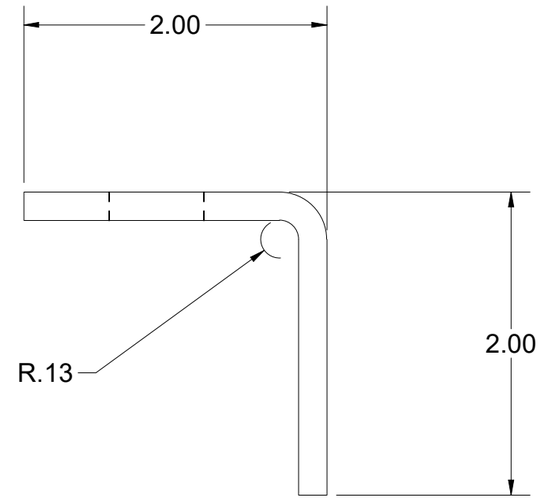

BEND TABLE				MATERIAL IFS: 100007734				
BEND RADIUS	V-OPENING	BEND ANGLE	BEND DEDUCTION	MATERIAL THK: 0.1875				
0.125	2"	90	0.3750	MAT DESCRIPTION: STL ASTM A36 SM-HRPO 60X120 RAW .1875				

JENSEN METALTECH
450 E. GLENDALE AVE. SPARKS. NV 89431
775-352-2716 FAX: 755-358-8127
JENSENMETALTECH.COM

©2021 Jensen Precast- All rights reserved.
All materials appearing as Jensen Precast documents and the like are proprietary work product and are protected under U.S. copyright and other laws.
Unless in conjunction with business conducted with Jensen Precast, any use of Jensen Precast work product without express, written consent is prohibited, and recipient is prohibited from distributing any and all work product to non-approved third parties under penalty of civil action.

NAME & DESCRIPTION: 200026472 2X2X0.25 35.875 LONG FORMED ANGLE		REV: B-2
WEIGHT: 7.078 lbmass	DRAWN BY: E. Massey	SHEET: 6 OF 6
CREATED: 8/27/2019	MODIFIED: 2/4/2021	

10000637O.idw