NOTES
■ FOR COMPLETE DESIGN AND PRODUCT INFORMATION CONTACT JENSEN PRECAST.

BILL OF MATERIALS

ITEM	UNIT QTY	QTY	PART NUMBER	DESCRIPTION
1	16.897 ft^3	16.897 ft^3	100011425	CONCRETE MIX GENERIC 5000 PSI
2	1	3	100004878	ANCHOR UTILITY .671DIA 5-SLAB GALV P75 5UA671
3	1	2	100006252	LADDER STEP RUNG POLYMER 3/8 X 10 MH ASTM C-478 9-93810R
4	1	1	200050405	REINFORCING MAT 200050405

100005550.idw

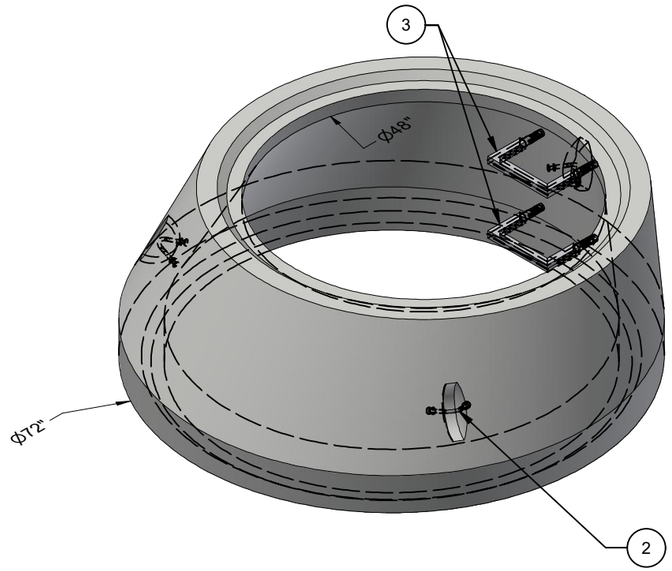

ISO REF

LIFTING NOTES
■ THIS CONCRETE PRODUCT IS DESIGNED TO BE LIFTED AT 2500PSI WITH 3 LIFT CONNECTIONS EQUALLY LOADED TO 3 LIFTING POINTS AT A MINIMUM 60° SLING ANGLE, MEASURED FROM HORIZONTAL.

BURY DEPTH:	0' - 10' to Top of Section		
WATER LEVEL:	Below Structure	APPROX. WEIGHT:	2559.87 Lbs
DESIGN SPEC:	ASTM C478	LOADING SPEC:	A-16 (AASHTO HS20-44)
REINFORCEMENT TYPE:	Plain Wire	LIFTING TYPE:	A-Anchor

JENSEN PRECAST EST. 1968

WWW.JENSENPRECAST.COM

©2021 Jensen Precast- All rights reserved.
All materials appearing as Jensen Precast documents and the like are proprietary work product and are protected under U.S. copyright and other laws.
Unless in conjunction with business conducted with Jensen Precast, any use of Jensen Precast work product without express, written consent is prohibited, and recipient is prohibited from distributing any and all work product to non-approved third parties under penalty of civil action.

CHANGE HISTORY			
NO.	DESCRIPTION	DATE	BY
1	2103-50513 STANDARD PRODUCT	3-12-21	DCH
2	KEYWAY CHANGE	3-18-21	DCH

DESCRIPTION:	Manhole Cone Eccentric D6072 to D48 x 24INGUStep HolesNC CASTING LAYOUT		REV: B-1
PART NUMBER:	100005550	DRAWN BY:	MLR
CREATED:	3/15/2021	MODIFIED:	5/27/2021
			SHEET: 1 OF 2

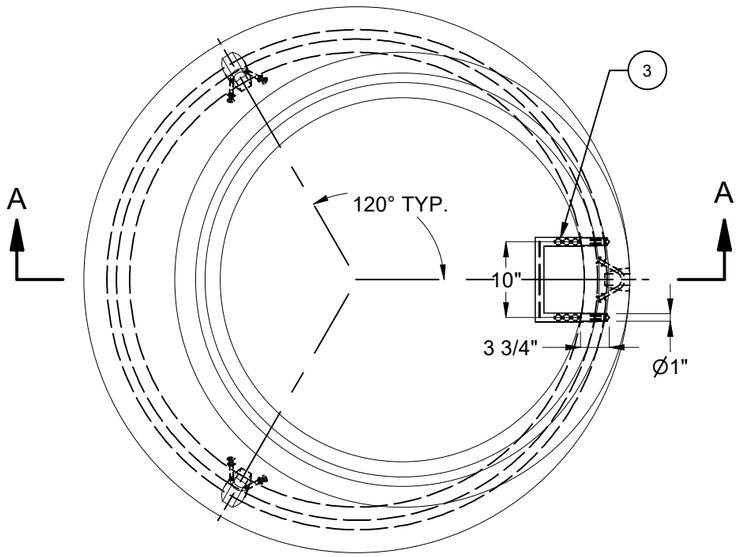

PLAN VIEW

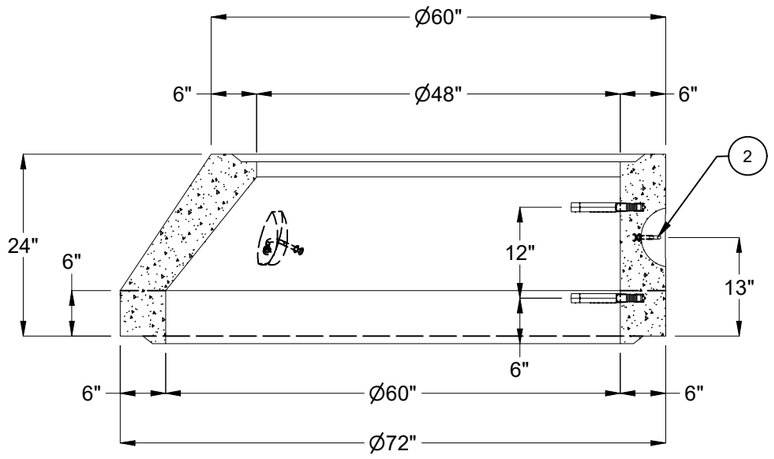

SECTION A-A

BURY DEPTH:	0' - 10' to Top of Section		
WATER LEVEL:	Below Structure	APPROX. WEIGHT:	2559.87 Lbs
DESIGN SPEC:	ASTM C478	LOADING SPEC:	A-16 (AASHTO HS20-44)
REINFORCEMENT TYPE:	Plain Wire	LIFTING TYPE:	A-Anchor

JENSEN PRECAST EST. 1968

WWW.JENSENPRECAST.COM

©2021 Jensen Precast- All rights reserved.
All materials appearing as Jensen Precast documents and the like are proprietary work product and are protected under U.S. copyright and other laws.
Unless in conjunction with business conducted with Jensen Precast, any use of Jensen Precast work product without express, written consent is prohibited, and recipient is prohibited from distributing any and all work product to non-approved third parties under penalty of civil action.

DESCRIPTION:	Manhole Cone Eccentric D6072 to D48 x 24INGUStep HolesNC CASTING DRAWING		REV: B-1
PART NUMBER:	100005550	DRAWN BY:	MLR
CREATED:	3/15/2021	MODIFIED:	5/27/2021
			SHEET: 2 OF 2

100005550.idw