DESIGN NOTES

- FOR COMPLETE DESIGN AND PRODUCT INFORMATION CONTACT JENSEN PRECAST.

BILL OF MATERIALS

ITEM	QTY	PART NUMBER	DESCRIPTION
1	1.545 ft^3	100005976	CONCRETE 4500 PSI GENERIC MIX
2	1	100006796	REINF HOOP STEEL .25235DIA GA 29DIA

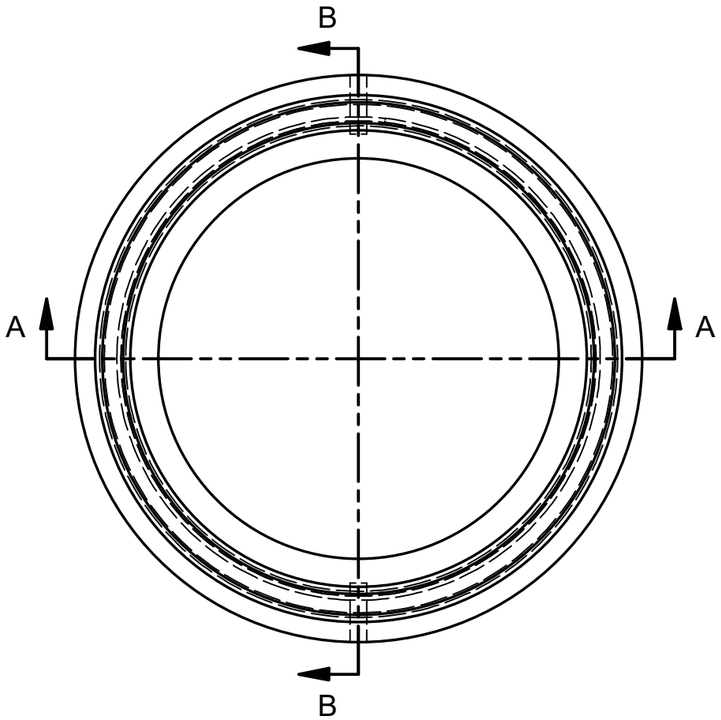

PLAN VIEW

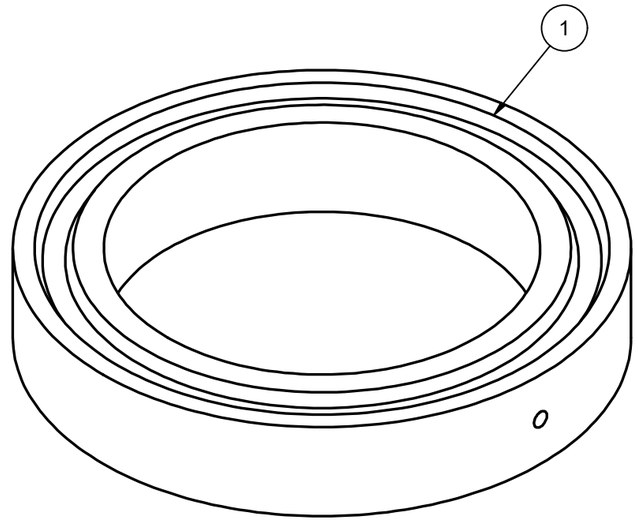

ISO VIEW

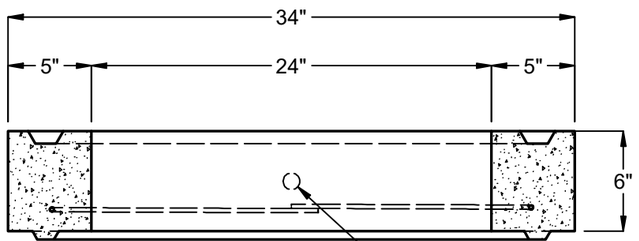

SECTION A-A

Ø1" HOLE SHOWN FOR USE WITH JPC3000 LIFT PIN. LIFTING EMBED AND HARDWARE MAY VARY PER MANUFACTURING LOCATOIN.

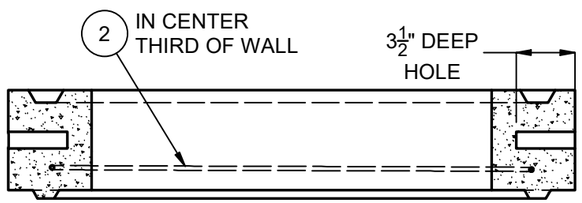

SECTION B-B

REVISION HISTORY

REV	DESCRIPTION	DATE	BY
A	DRAWING CREATED	7/23/2020	T.Larson

BURY DEPTH:	0.0' - 50.0' to Top		
WATER LEVEL:	0.0'	WEIGHT:	233.52 Lbs
DESIGN SPEC:	ASTM C478,AASHTO M199	LOADING SPEC:	A-16 (AASHTO HS20-44)
REINFORCEMENT TYPE:	Plain Wire	LIFTING TYPE:	None

JENSEN PRECAST EST. 1968

WWW.JENSENPRECAST.COM

©2018 Jensen Precast- All rights reserved.
All materials appearing as Jensen Precast documents and the like are proprietary work product and are protected under U.S. copyright and other laws.
Unless in conjunction with business conducted with Jensen Precast, any use of Jensen Precast work product without express, written consent is prohibited, and recipient is prohibited from distributing any and all work product to non-approved third parties under penalty of civil action.

DESCRIPTION:	Grade Ring D2434x6 CASTING LAYOUT		REV: B-1
PART NUMBER:	100005512	DRAWN BY:	T.Larson
CREATED:	12/18/2018	MODIFIED:	8/10/2021
			SHEET: 1 OF 1

100005512.idw