DESIGN NOTES:

- CONCRETE SHALL HAVE A 28 DAY MINIMUM COMPRESSIVE STRENGTH OF 5000 PSI
- SOIL UNIT WEIGHT DRY - 110 lbs/cu.ft.
- EQUIVALENT LATERAL PRESSURE DRY - 40 lbs/cu.ft.
- SOIL UNIT WEIGHT WET - 120 lbs/cu.ft.
- EQUIVALENT LATERAL PRESSURE WET - 80 lbs/cu.ft.

PRODUCTION NOTES:

- LIFTING INSERTS SHALL BE INSTALLED PER MANUFACTURER'S REQUIREMENTS
- APPLIED FINISH - NONE
- INTERNAL LINER/COATING - NONE
- EXTERNAL LINER/COATING - NONE

BILL OF MATERIALS

ITEM	UNIT QTY	QTY	PART NUMBER	DESCRIPTION
1	20.384 ft^3	20.384 ft^3	100011425	CONCRETE MIX 5000 PSI
2	1	16	100012720	INSERT PLASTIC W/ BREAK OFF SNAP 0.5IN
3	1	4	100007235	ANCHOR UTILITY .444DIA 4-SLAB GALV P75 4UA444
4	1	4	100003014	TERMINATOR DUCT WITH SEAL 4.5IN OR 4.35IN T4351
5	1	8	100002527	CABLE RACK 18 HOLE GALV TABS
6	1	4	100005740	CABLE RACK SUPPORT S-BRACKET 1/2 X 1 X 3-5/8 INW 10A40
7	1	1	100020616	REINFORCING MAT 100020616

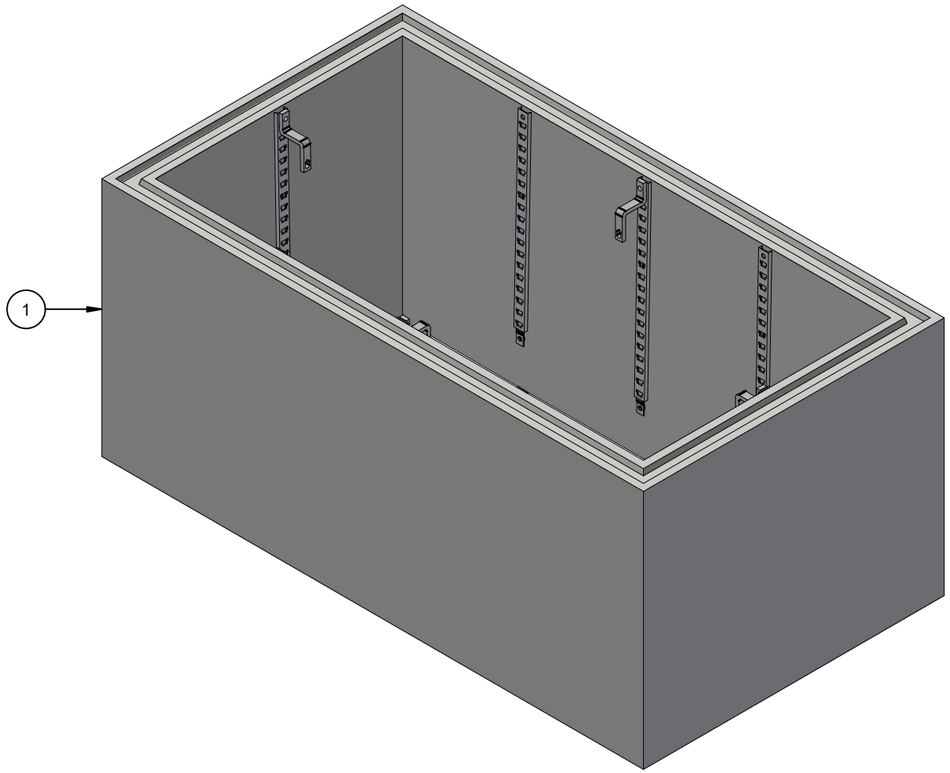

ISO LAYOUT

100005501.idw

RIGGING DIAGRAM*	C

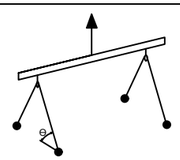

LIFTING NOTES
■ THIS CONCRETE PRODUCT IS DESIGNED TO BE LIFTED AT 2500 PSI WITH 4 LIFT CONNECTIONS EQUALLY LOADED TO 4 LIFTING POINTS AT A MINIMUM 60° SLING ANGLE, MEASURED FROM HORIZONTAL.
*All rigging shall be design by a qualified professional. Loading diagrams show illustrations of possible rigging setups to achieve the required sling angle and load leg equalization. Other valid rigging configurations are possible. A qualified professional must be consulted prior to lifting.

CHANGE HISTORY			
NO.	DESCRIPTION	DATE	BY
1	INITIAL RELEASE	4/11/2024	J.R.
2	REVISED PER UPDATED FORM DIMENSIONS	5/2/2024	J.R.
3			

BURY DEPTH:	0.3' - 1.3' to Top		
WATER LEVEL:	5.0'	APPROX. WEIGHT:	3066.8 Lbs
DESIGN SPEC:	ACI 318,ASTM C857	LOADING SPEC:	A-16 (AASHTO HS20-44)
REINFORCEMENT TYPE:	Rebar	LIFTING TYPE:	A-Anchor

JENSEN PRECAST EST. 1968

WWW.JENSENPRECAST.COM

©2024 Jensen Precast- All rights reserved.
All materials appearing as Jensen Precast documents and the like are proprietary work product and are protected under U.S. copyright and other laws.
Unless in conjunction with business conducted with Jensen Precast, any use of Jensen Precast work product without express, written consent is prohibited, and recipient is prohibited from distributing any and all work product to non-approved third parties under penalty of civil action.

DESCRIPTION:	Riser 3773x36 Knockout,Terminators Racking CASTING LAYOUT		REV: C-1
PART NUMBER:	100005501	DRAWN BY:	J. Ramirez
CREATED:	4/11/2024	MODIFIED:	4/11/2024
			SHEET: 1 OF 2

FEATURES		
ID	DESCRIPTION	QTY
A	6"(X) x 24"(Y) x 1 3/4" Deep Knockout	1
B	12"(X) x 18"(Y) x 1 3/4" Deep Knockout	1

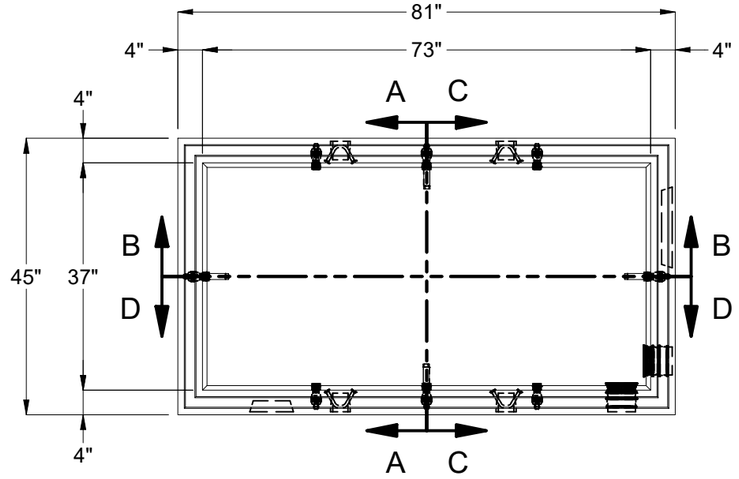

PLAN VIEW

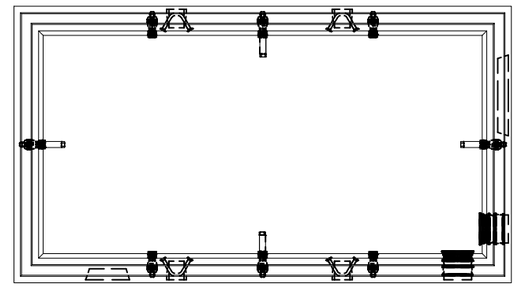

PLAN VIEW
(SHOWING OBJECT DIMENSIONS)

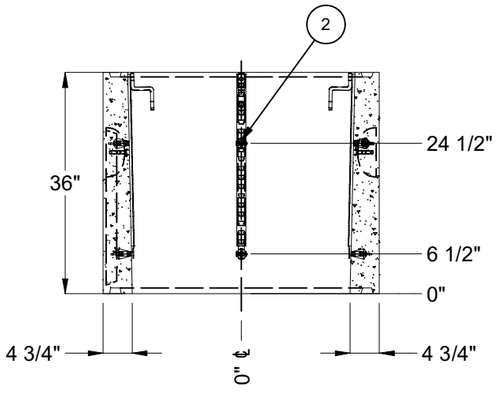

SECTION A-A

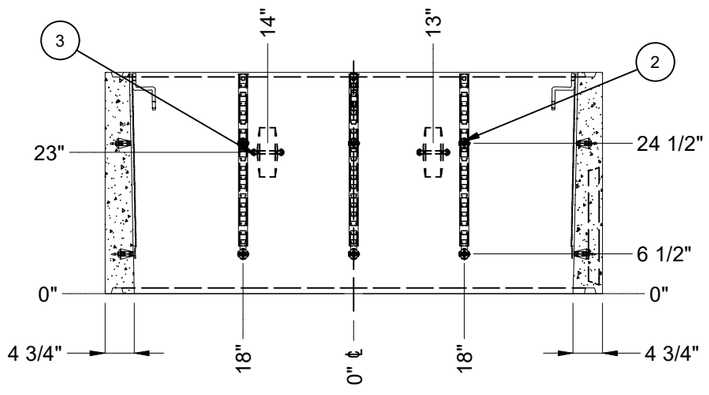

SECTION B-B

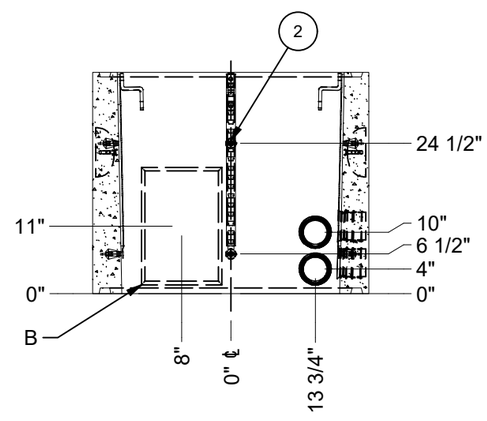

SECTION C-C

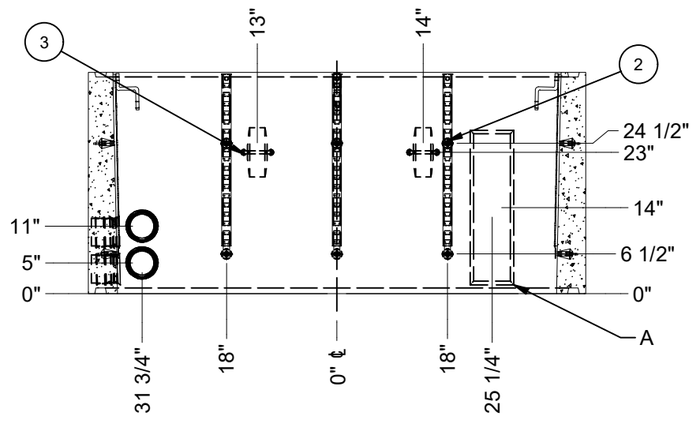

SECTION D-D

BURY DEPTH:	0.3' - 1.3' to Top		
WATER LEVEL:	5.0'	APPROX. WEIGHT:	3066.8 Lbs
DESIGN SPEC:	ACI 318,ASTM C857	LOADING SPEC:	A-16 (AASHTO HS20-44)
REINFORCEMENT TYPE:	Rebar	LIFTING TYPE:	A-Anchor

JENSEN PRECAST EST. 1968

WWW.JENSENPRECAST.COM

©2024 Jensen Precast- All rights reserved.
All materials appearing as Jensen Precast documents and the like are proprietary work product and are protected under U.S. copyright and other laws.
Unless in conjunction with business conducted with Jensen Precast, any use of Jensen Precast work product without express, written consent is prohibited, and recipient is prohibited from distributing any and all work product to non-approved third parties under penalty of civil action.

DESCRIPTION:	Riser 3773x36 Knockout,Terminators Racking CASTING DRAWING		REV: C-1
PART NUMBER:	100005501	DRAWN BY:	J. Ramirez
CREATED:	4/11/2024	MODIFIED:	4/11/2024

SHEET: 2 OF 2

100005501.idw