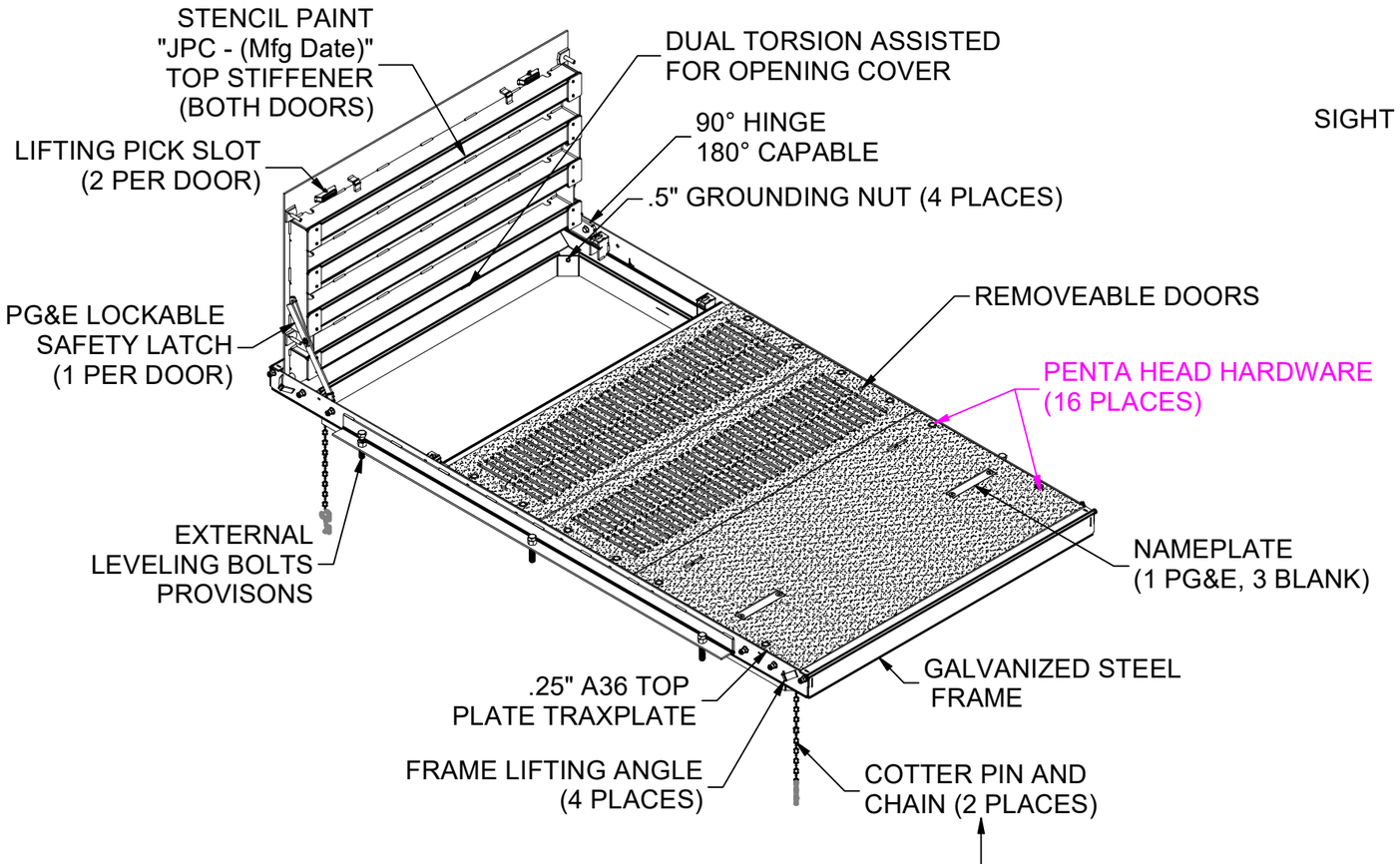

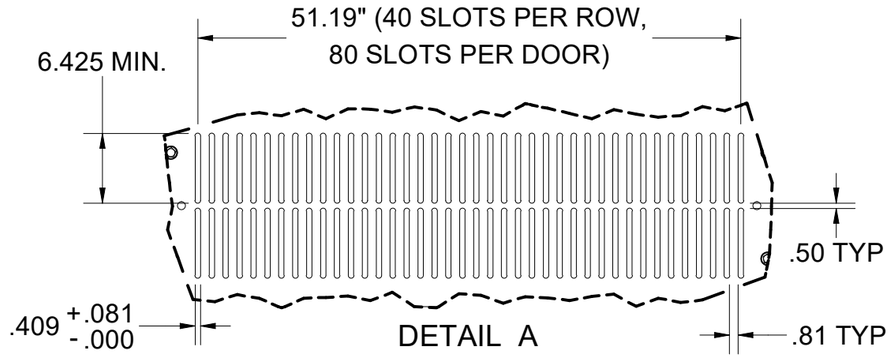

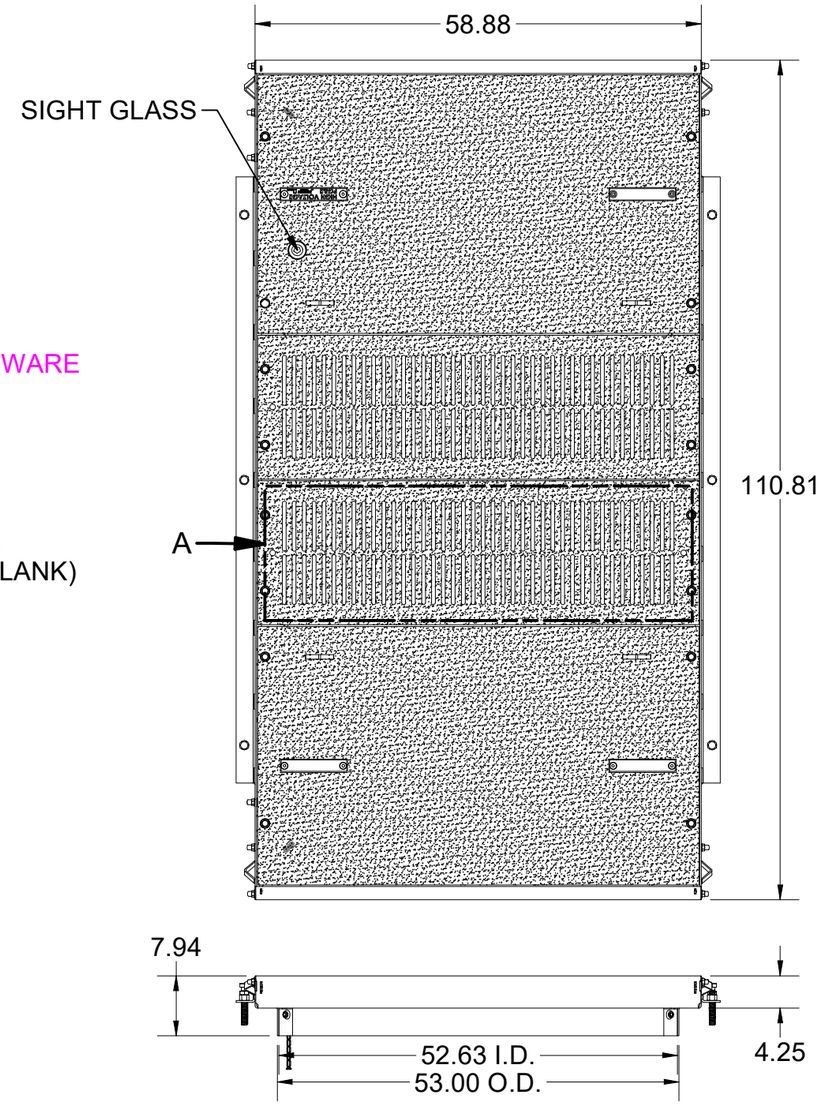

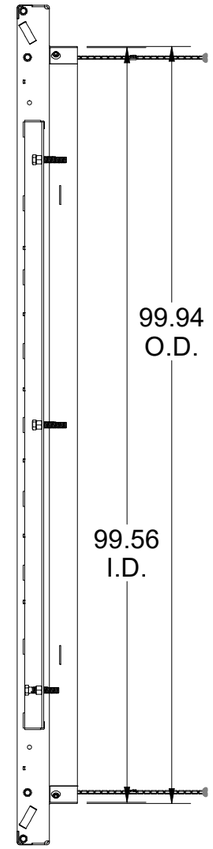

TYPICAL VENT SLOT AREA = 2.56 sq in to 3.17 sq in
MINIMUM TOTAL OPEN AREA PER ASSEMBLY = 409.4 sq in
(AFTER TRAX AND GALV PROCESS)

SEE SHEET 2 FOR REVISION HISTORY

LOADING:	PG&E FVT TRANSFORMER				DESCRIPTION: CAS2-54102-AH-TRX-G-SG-GR-PG&E-OH08-TRANSFORMER FVT 54x102 Cover Assembly (Loading Criteria Per N/A, , Steel, Hinged, Pickhole, TraxPlate™, Galvanized , Sight Glass, PG&E TRANSFORMER FVT) 08		REV: G-1
SURFACE:	TraxPlate™	FINISH:	Galvanized		PART NUMBER: 100005481	DRAWN BY: A.Billett	SHEET: 1
WEIGHT:	1561.28 lbs	MARKING:	As Noted		CREATED: 10/26/2022	MODIFIED: 9/11/2023	

JENSEN METALTECH
450 E. GLENDALE AVE. SPARKS. NV 89431
775-352-2716 FAX: 755-358-8127
JENSENMETALTECH.COM

©2023 Jensen Precast- All rights reserved.
All materials appearing as Jensen Precast documents and the like are proprietary work product and are protected under U.S. copyright and other laws.
Unless in conjunction with business conducted with Jensen Precast, any use of Jensen Precast work product without express, written consent is prohibited, and recipient is prohibited from distributing any and all work product to non-approved third parties under penalty of civil action.

100005481_Submittal.idw

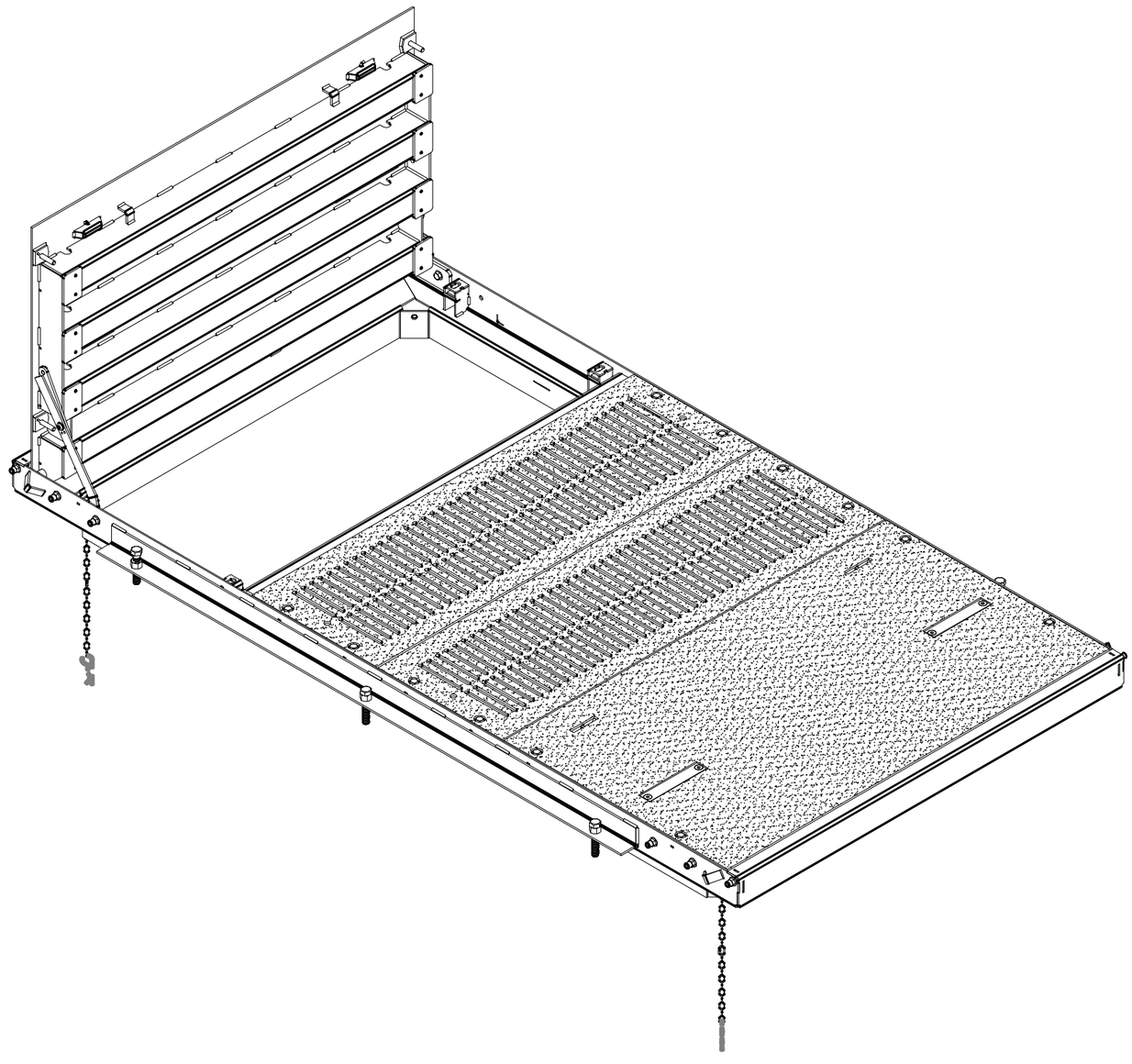

REVISION HISTORY		
REV	DESCRIPTION	DATE
A-1	1ST ARTICLE PRODUCTION RELEASE	10/26/22
B-1	UPDATED MODELS WITH CORRECTION FROM SPLICE TEST	11/1/22
C-1	UPDATED TO REFLECT AUDIT CORRECTION	12/2/22
D-1	UPDATED SLOTS SIZE FOR TRAX AND GALV BUILD UP. CLEANED WELDS AND MATCHED WELD CALLOUTS TO MANUFACTURING	3/13/23
E-4	UPDATED NOTES AND WELD CALLOUTS PER PG&E COMMENTS DURING TESTING; CHANGED TO 2.25" COVER BOLTS; ADDED VISUAL WELDS AND MORE WELD INDICATOR NOTCHES FOR MFG PRECISION	6/8/23
F-1	UPDATED LOUVER END WELDS FROM 1" TO 1/2" LG PER PG&E REQUEST	8/17/2023
G-1	ADDED UPDATED SLOT TOLERANCES PER PG&E REQUEST; ADDED STENCIL NOTE AND TAPE NOTE FOR HAIRPIN COTTER	9/11/2023

100005481_Submittal.idw

MATERIAL FINISH:
Galvanized

MATERIAL SURFACE:
TraxPlate™

JENSEN METALTECH
450 E. GLENDALE AVE. SPARKS. NV 89431
775-352-2716 FAX: 755-358-8127
JENSENMETALTECH.COM

©2023 Jensen Precast- All rights reserved.
All materials appearing as Jensen Precast documents and the like are proprietary work product and are protected under U.S. copyright and other laws.
Unless in conjunction with business conducted with Jensen Precast, any use of Jensen Precast work product without express, written consent is prohibited, and recipient is prohibited from distributing any and all work product to non-approved third parties under penalty of civil action.

PART NUMBER & DESCRIPTION: 100005481
CAS2-54102-AH-TRX-G-SG-GR-PG&E-OH08-TRANSFORMER FVT

REV: G-1

WEIGHT: 1561.28 Lbs

DRAWN BY: A.Billett

CREATED: 10/26/2022

MODIFIED: 9/11/2023

SHEET: 2

DESIGN NOTES
- TOP PLATE: ASTM A36
- BOTTOM CHANNEL: ASTM A36
- BEARING BAR: ASTM A36
- WELD: GRADE E70
- UNLESS SPECIFIED, WELD LENGTHS ARE FULL

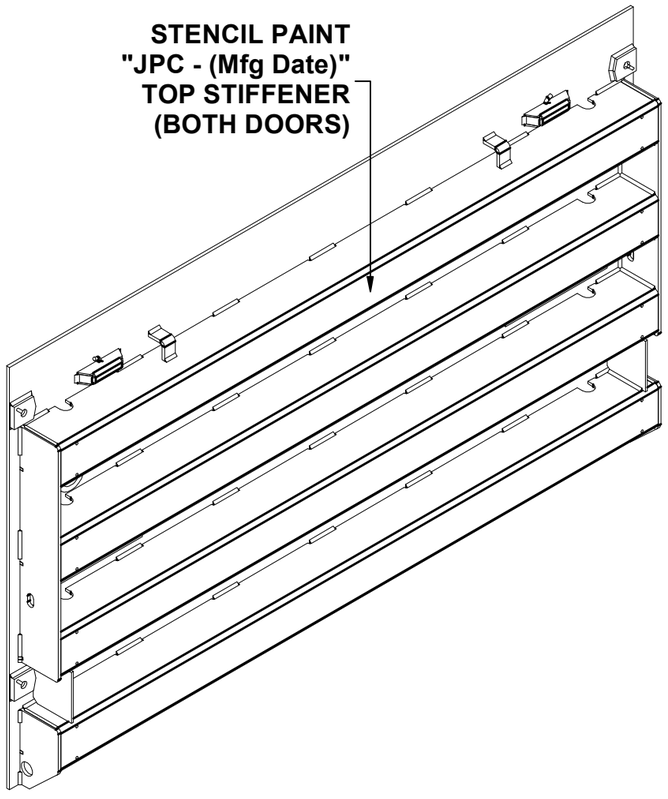

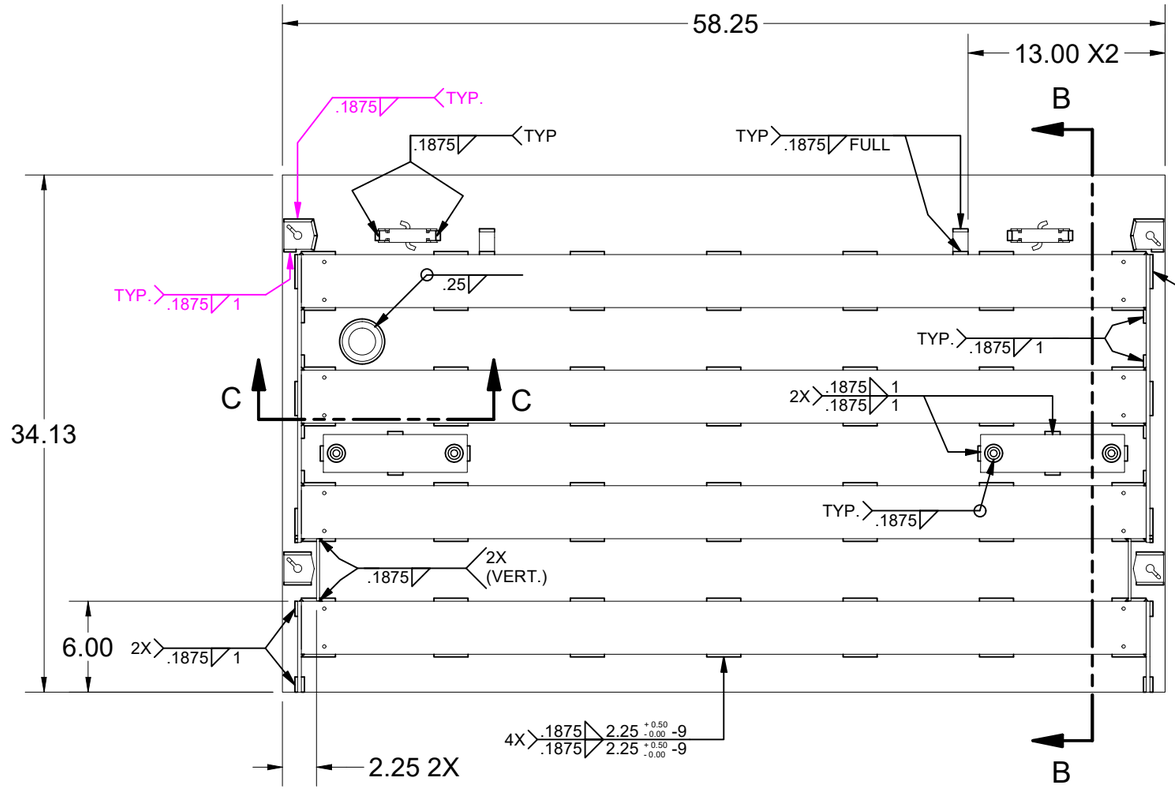

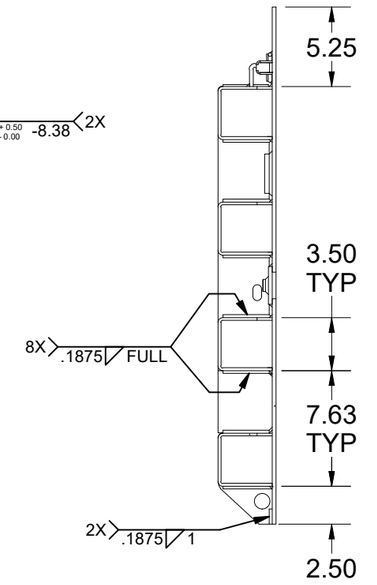

SECTION B-B

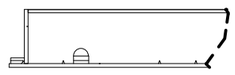

USE NOTCHES FOR HOLDING WELDING PATTERN

SECTION C-C

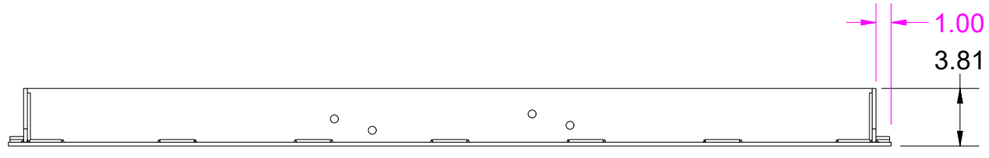

MATERIAL FINISH: Galvanized	JENSEN METALTECH 450 E. GLENDALE AVE. SPARKS. NV 89431 775-352-2716 FAX: 755-358-8127 *JENSENMETALTECH.COM*	©2023 Jensen Precast- All rights reserved. All materials appearing as Jensen Precast documents and the like are proprietary work product and are protected under U.S. copyright and other laws. Unless in conjunction with business conducted with Jensen Precast, any use of Jensen Precast work product without express, written consent is prohibited, and recipient is prohibited from distributing any and all work product to non-approved third parties under penalty of civil action.	PART NUMBER & DESCRIPTION: 200069189 DAS2-T-54102-H-TRX-G-SG-PG&E-TRANSFORMER FVT	REV: G-1
MATERIAL SURFACE: TraxPlate™			WEIGHT: 277.4 Lbs CREATED: 10/26/2022	DRAWN BY: A.Billett MODIFIED: 9/11/2023	SHEET: 3

100005481_Submittal.idw

DESIGN NOTES

- TOP PLATE: ASTM A36
- BOTTOM CHANNEL: ASTM A36
- BEARING BAR: ASTM A36
- WELD: GRADE E70
- UNLESS SPECIFIED, WELD LENGTHS ARE FULL

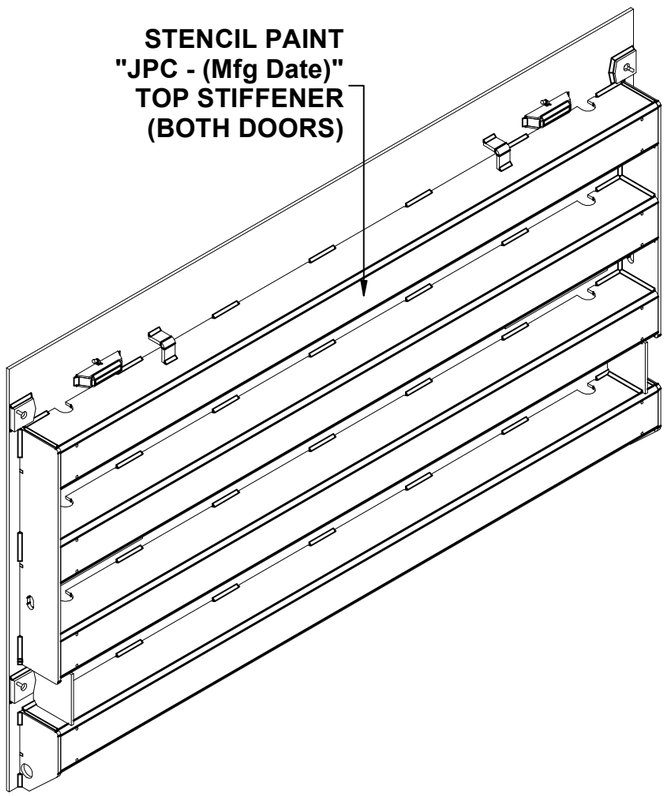

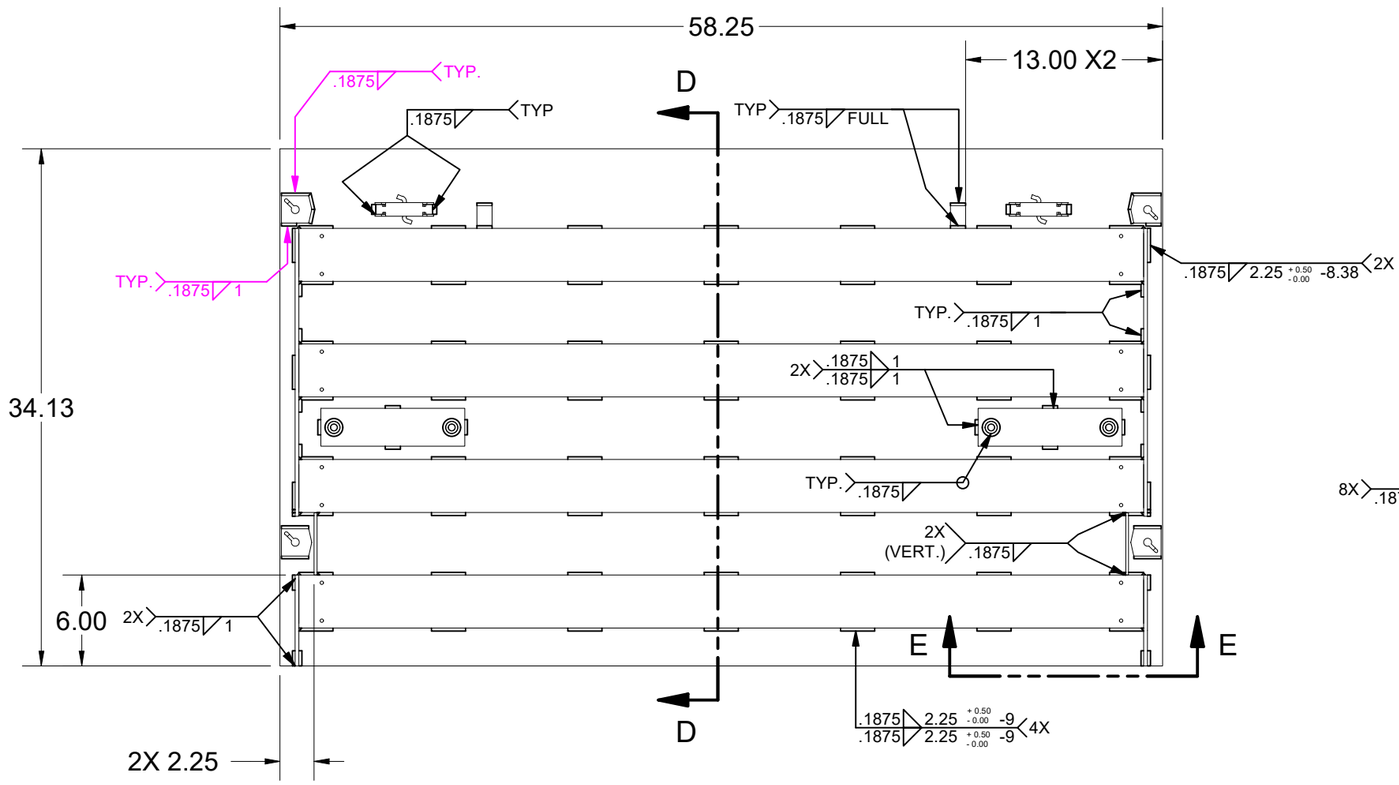

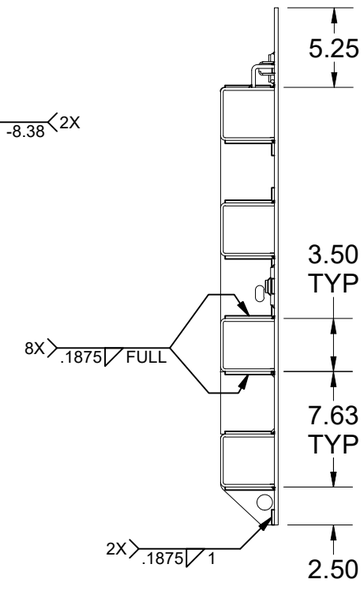

SECTION D-D

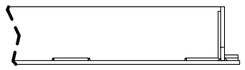

USE NOTCHES FOR HOLDING WELDING PATTERN

VIEW E-E

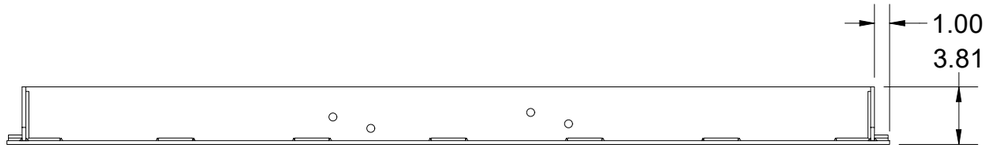

MATERIAL FINISH: Galvanized	JENSEN METALTECH 450 E. GLENDALE AVE. SPARKS. NV 89431 775-352-2716 FAX: 755-358-8127 *JENSENMETALTECH.COM*	©2023 Jensen Precast- All rights reserved. All materials appearing as Jensen Precast documents and the like are proprietary work product and are protected under U.S. copyright and other laws. Unless in conjunction with business conducted with Jensen Precast, any use of Jensen Precast work product without express, written consent is prohibited, and recipient is prohibited from distributing any and all work product to non-approved third parties under penalty of civil action.	PART NUMBER & DESCRIPTION: 200069185 DAS2-T-54102-H-TRX-G-PG&E-TRANSFORMER FVT	REV: G-1
MATERIAL SURFACE: TraxPlate™			WEIGHT: 277.23 Lbs CREATED: 10/26/2022	DRAWN BY: A.Billett MODIFIED: 9/11/2023	SHEET: 4

100005481_Submittal.idw

DESIGN NOTES
- TOP PLATE: ASTM A36
- BOTTOM CHANNEL: ASTM A36
- BEARING BAR: ASTM A36
- WELD: GRADE E70
- UNLESS SPECIFIED, WELD LENGTHS ARE FULL

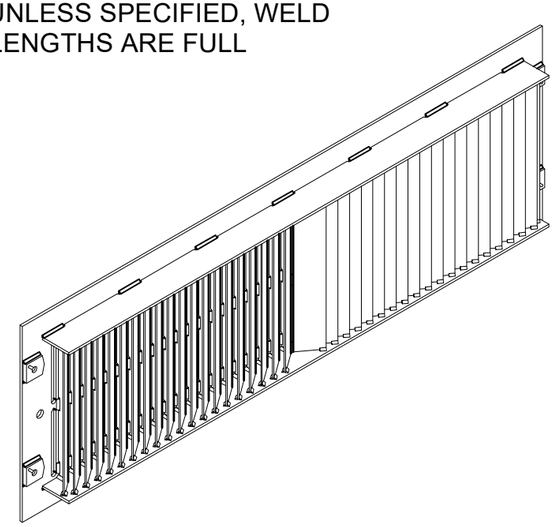

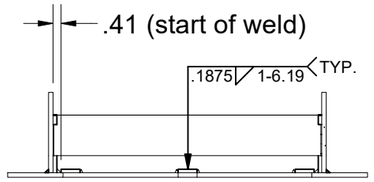

SECTION G-G

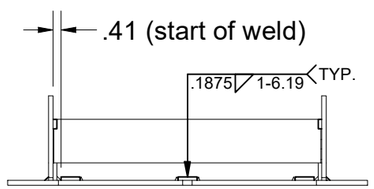

SECTION H-H

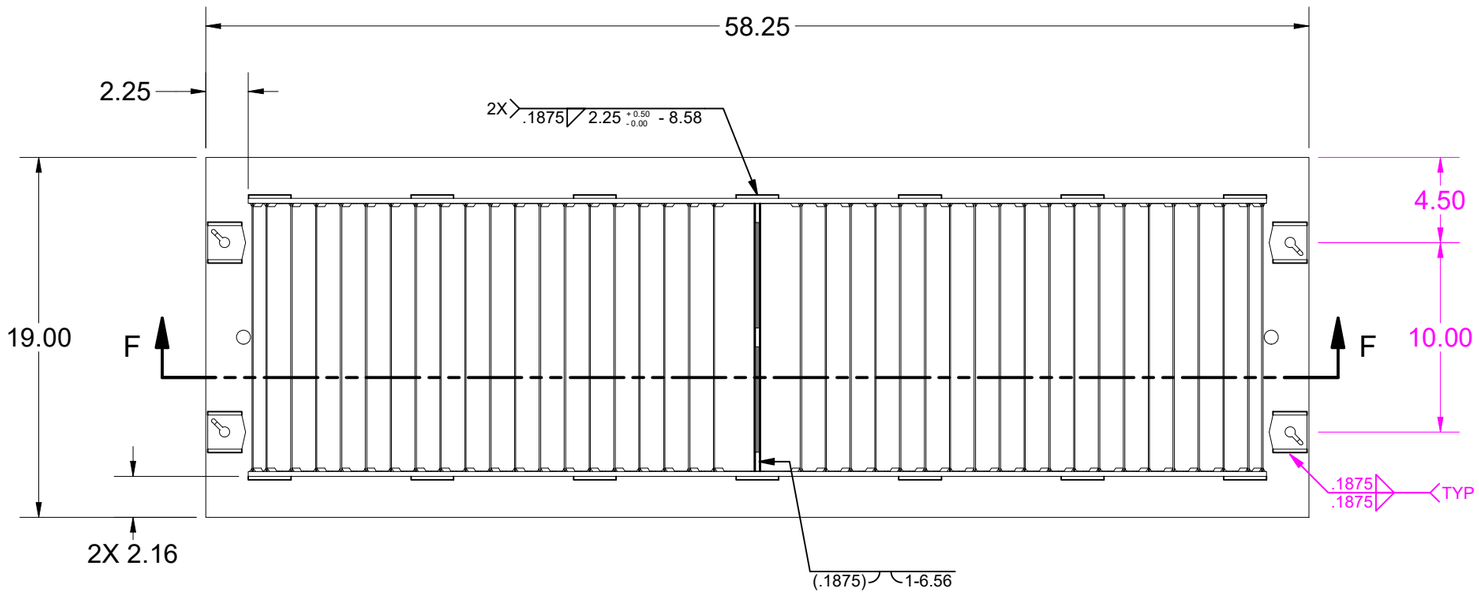

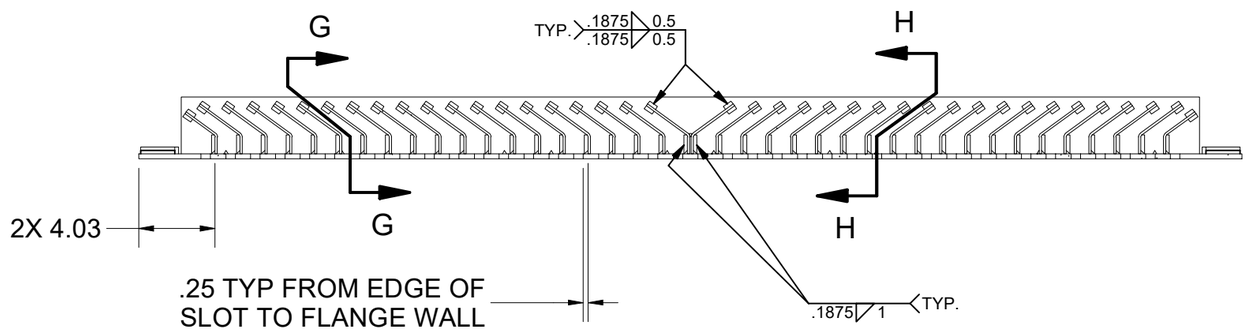

SECTION F-F

MATERIAL FINISH: Galvanized	JENSEN METALTECH 450 E. GLENDALE AVE. SPARKS. NV 89431 775-352-2716 FAX: 755-358-8127 *JENSENMETALTECH.COM*	©2023 Jensen Precast- All rights reserved. All materials appearing as Jensen Precast documents and the like are proprietary work product and are protected under U.S. copyright and other laws. Unless in conjunction with business conducted with Jensen Precast, any use of Jensen Precast work product without express, written consent is prohibited, and recipient is prohibited from distributing any and all work product to non-approved third parties under penalty of civil action.	PART NUMBER & DESCRIPTION: 200069181 DAS1-T-54102-D-TRX-G-PG&E-TRANSFORMER FVT		REV: G-1
MATERIAL SURFACE: TraxPlate™			WEIGHT: 155.29 Lbs	DRAWN BY: A.Billett	SHEET: 5
			CREATED: 10/26/2022	MODIFIED: 9/11/2023	

100005481_Submittal.idw

DESIGN NOTES
- FRAME SIDE & END: ASTM A36
- WELD: GRADE E70
- UNLESS SPECIFIED, WELD LENGTHS ARE FULL LENGTH

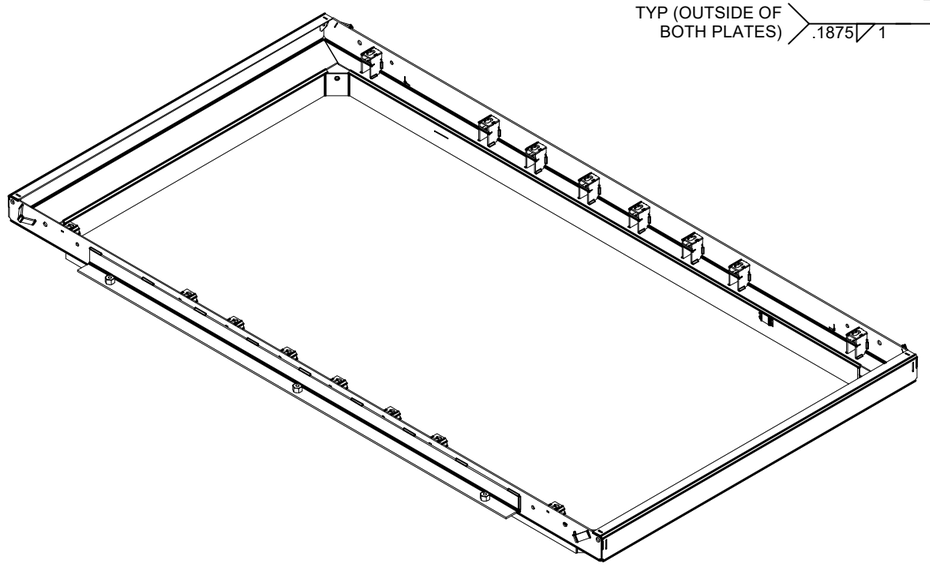

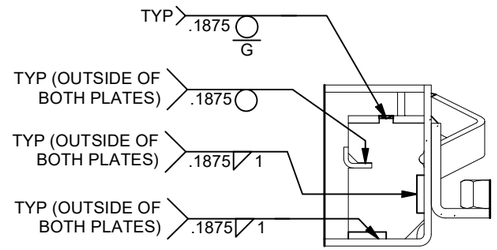

SECTION K-K

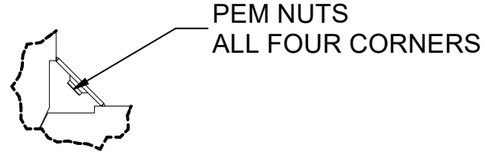

DETAIL L

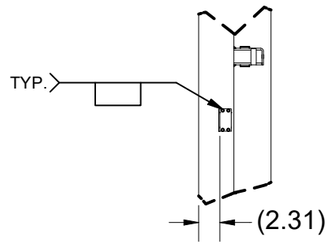

SECTION J-J

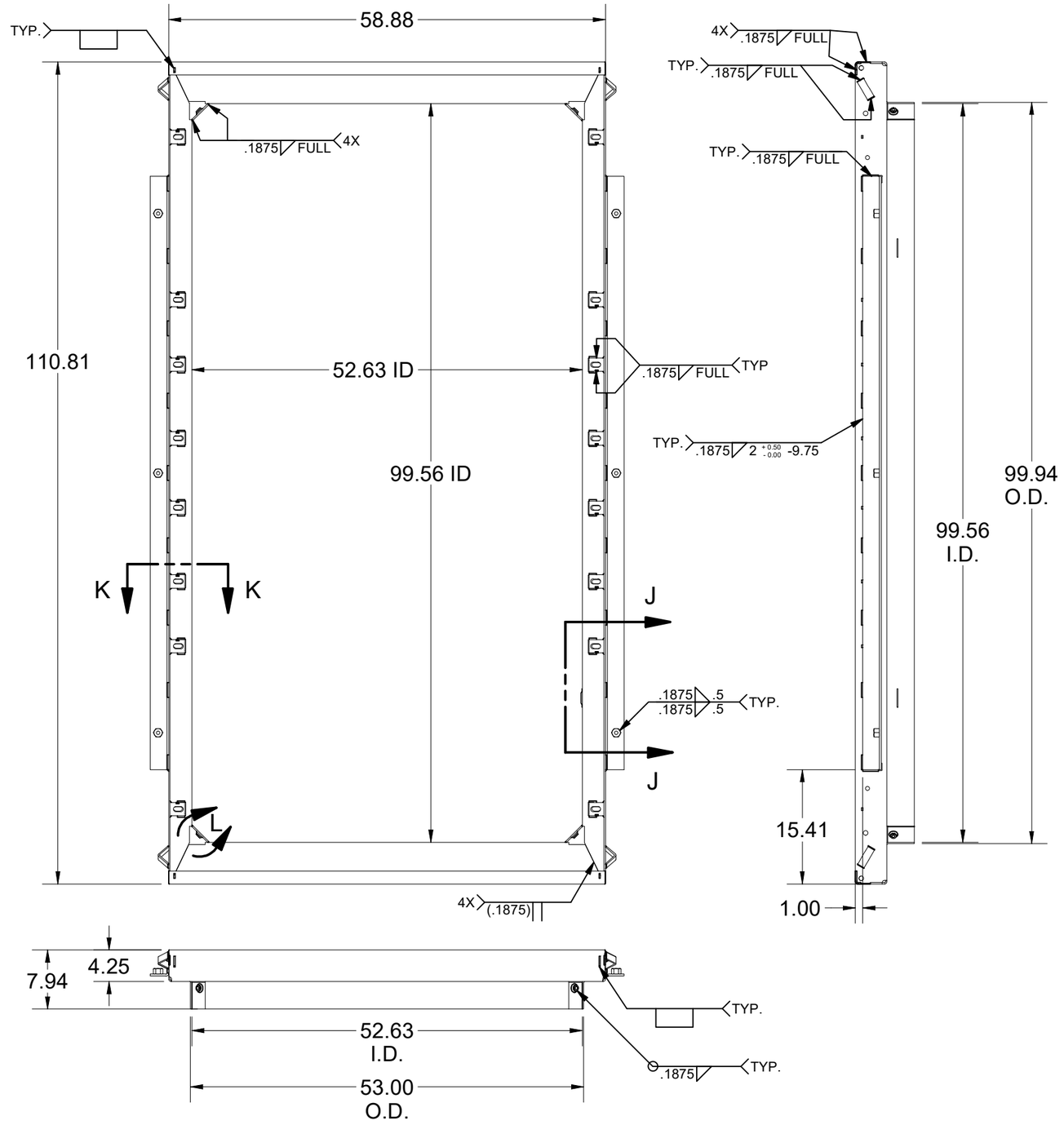

MATERIAL FINISH: Galvanized	JENSEN METALTECH 450 E. GLENDALE AVE. SPARKS. NV 89431 775-352-2716 FAX: 755-358-8127 *JENSENMETALTECH.COM*	©2023 Jensen Precast- All rights reserved. All materials appearing as Jensen Precast documents and the like are proprietary work product and are protected under U.S. copyright and other laws. Unless in conjunction with business conducted with Jensen Precast, any use of Jensen Precast work product without express, written consent is prohibited, and recipient is prohibited from distributing any and all work product to non-approved third parties under penalty of civil action.	PART NUMBER & DESCRIPTION: 200069180 FAS-54102-AH-G-GR-PG&E-OH07-TRANSFORMER FVT	REV: G-1
MATERIAL SURFACE: Smooth			WEIGHT: 275.04 Lbs CREATED: 10/26/2022	DRAWN BY: A.Billett MODIFIED: 9/11/2023	SHEET: 6

100005481_Submittal.idw

DESIGN NOTES
- STRUCTURAL TUBE: ASTM 500
- STRUCTURAL ANGLES: ASTM A36
- WELD: GRADE E70
- UNLESS SPECIFIED, WELD LENGTHS ARE FULL

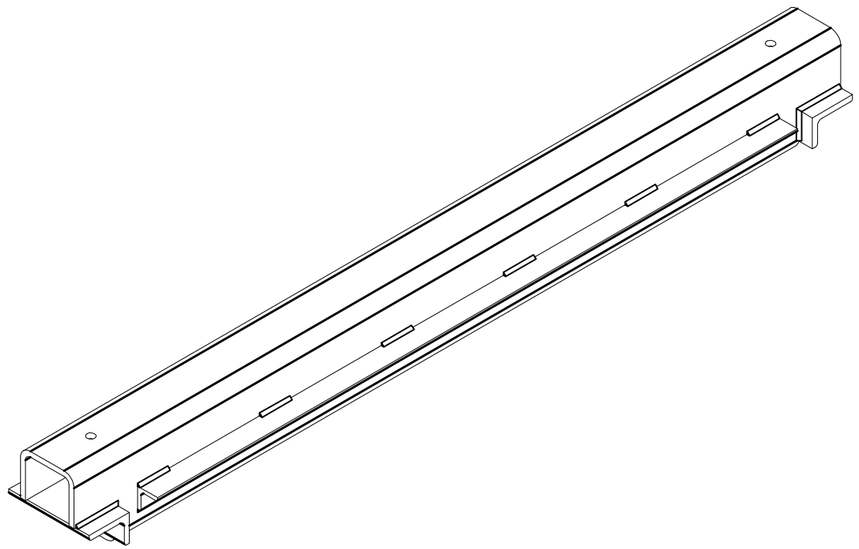

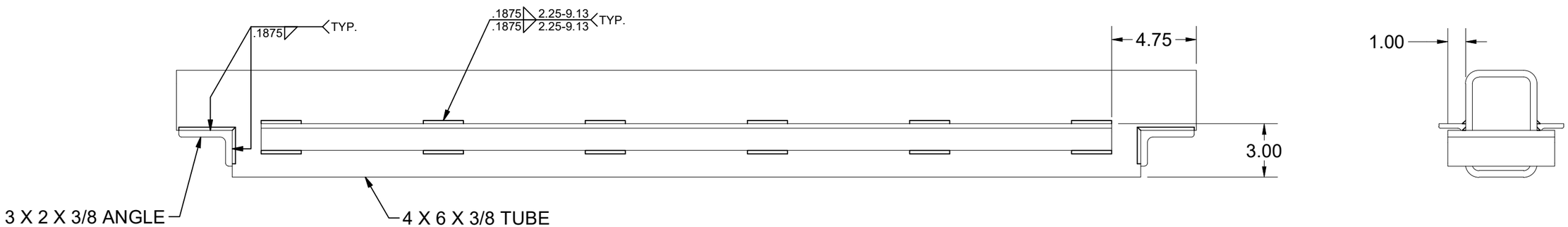

MATERIAL FINISH: Galvanized	JENSEN METALTECH 450 E. GLENDALE AVE. SPARKS. NV 89431 775-352-2716 FAX: 755-358-8127 *JENSENMETALTECH.COM*	©2023 Jensen Precast- All rights reserved. All materials appearing as Jensen Precast documents and the like are proprietary work product and are protected under U.S. copyright and other laws. Unless in conjunction with business conducted with Jensen Precast, any use of Jensen Precast work product without express, written consent is prohibited, and recipient is prohibited from distributing any and all work product to non-approved third parties under penalty of civil action.	PART NUMBER & DESCRIPTION: 200068728 Support Beam 57.25in W Beam 54102 PG&E FVT		REV: G-1
MATERIAL SURFACE: Smooth			WEIGHT: 126.41 Lbs	DRAWN BY: A.Billett	SHEET: 7
			CREATED: 10/26/2022	MODIFIED: 9/11/2023	

100005481_Submittal.idw