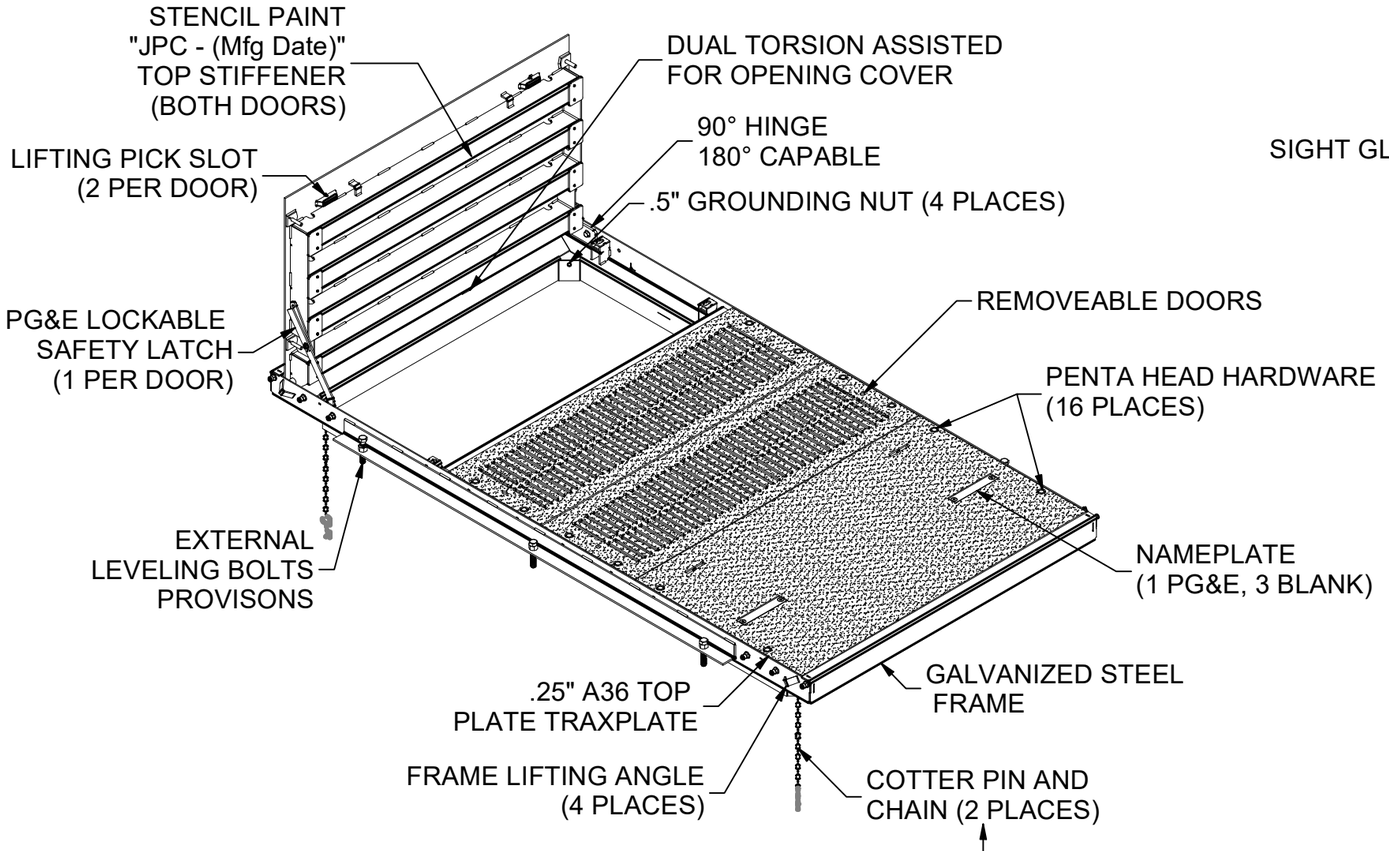

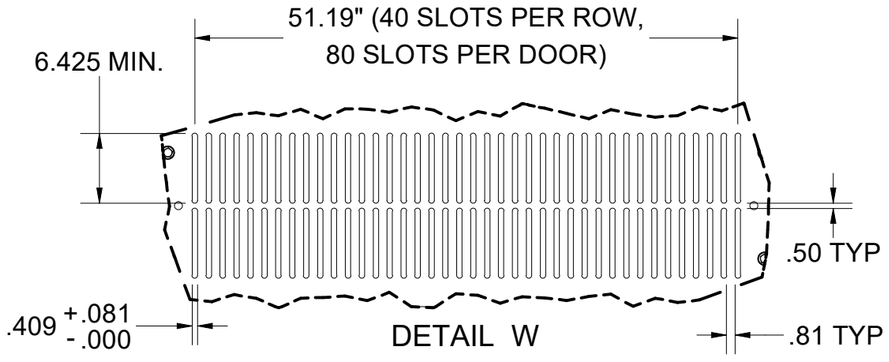

TYPICAL VENT SLOT AREA = 2.56 sq in to 3.17 sq in
MINIMUM TOTAL OPEN AREA PER ASSEMBLY = 409.4 sq in
(AFTER TRAX AND GALV PROCESS)

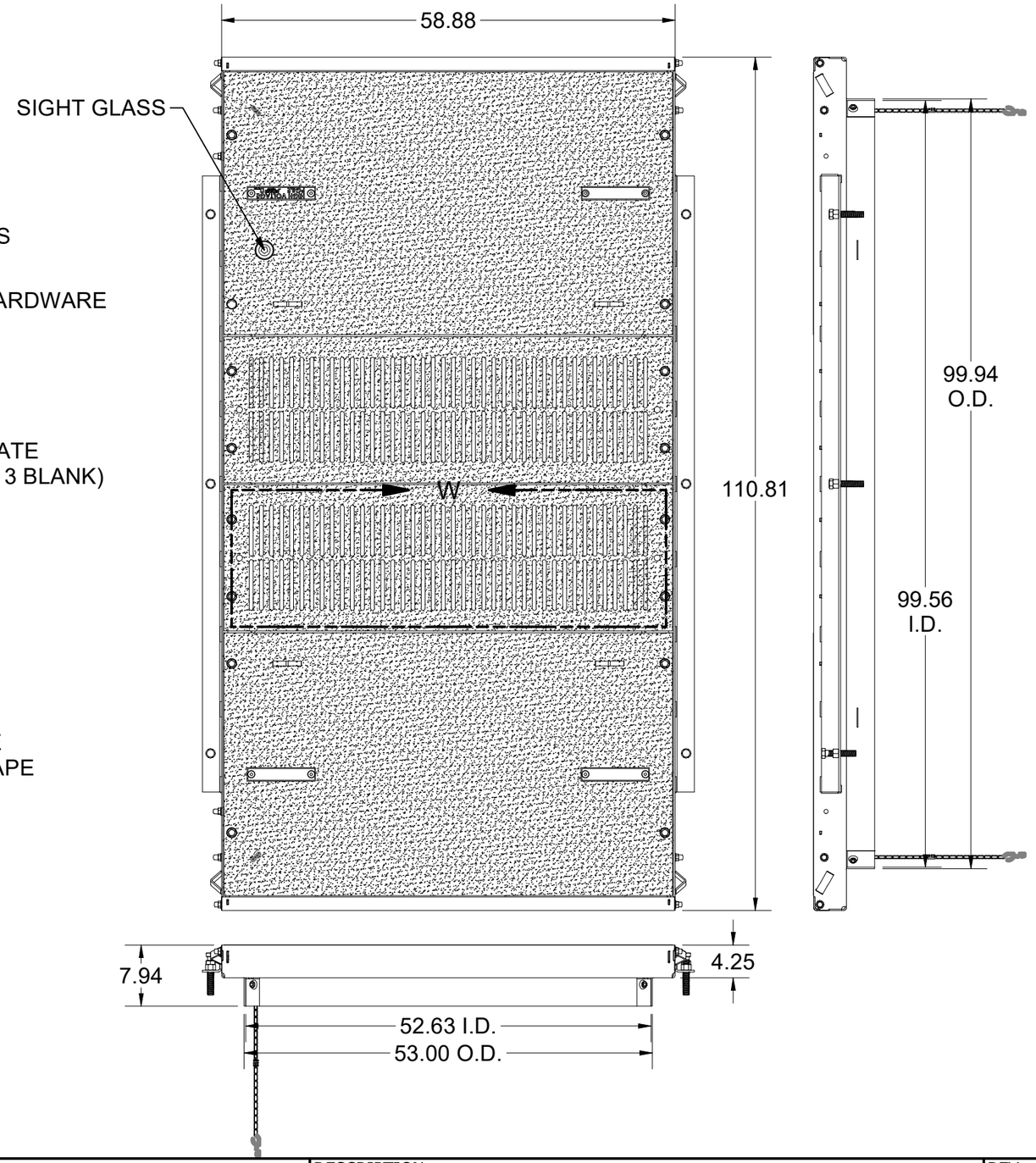

100005481.idw

LOADING CRITERIA: PG&E FVT

SURFACE:	TraxPlate™	FINISH:	Galvanized
WEIGHT:	1561.28 lbs	MARKING:	

Infrastructure
JENSEN
527 Dunn Circle, Sparks, NV 89431
775-352-2716 FAX: 755-358-8127
JENSENMETALTECH.COM

©2026 Jensen Infrastructure - All rights reserved.
All materials appearing as Jensen Infrastructure documents and the like are proprietary work product and are protected under U.S. copyright and other laws. Unless in conjunction with business conducted with Jensen Infrastructure , any use of Jensen Infrastructure work product without express, written consent is prohibited, and recipient is prohibited from distributing any and all work product to non-approved third parties under penalty of civil action.
This product shall only be produced in a Jensen Infrastructure facility.

DESCRIPTION: CAS2-54102-AH-TRX-G-SG-GR-PG&E-OH08-TRANSFORMER FVT

54x102 Cover Assembly (Loading Criteria Per N/A, , Steel, Hinged, Pickhole, TraxPlate™, Galvanized , Sight Glass, PG&E TRANSFORMER FVT) 08

PART NUMBER:	100005481	DRAWN BY:	R. Dohr
CREATED:	10/7/2022	MODIFIED:	2/2/2026

REV: G-2-1

SHEET: 1

BILL OF MATERIALS

ITEM	ITEM QTY	QTY	PART NUMBER	DESCRIPTION	PART NAME
1	1	1	200069189	DAS2-T-54102-H-TRX-G-SG-PG&E-TRANSFORMER FVT	200069189
2	1	1	200069185	DAS2-T-54102-H-TRX-G-PG&E-TRANSFORMER FVT	200069185
3	1	3	200068728	Support Beam 57.25in W Beam 54102 PG&E FVT	200068728
4	1	1	200069180	FAS-54102-AH-G-GR-PG&E-OH07-TRANSFORMER FVT	200069180
5	2	2	200069181	DAS1-T-54102-D-TRX-G-PG&E-TRANSFORMER FVT	200069181
6	2	2	200069493	HINGE ASSY PG&E FVT LEFT .5625	200069493
7	2	2	200069179	HINGE ASSY PG&E FVT RIGHT .4375	200069179
8	2	2	200068660	PG&E FVT SAFETY LATCH	200068660
9	10	10	100026256	LOW-STRENGTH STEEL FLANGE NUT, 1/2" - 13 THREAD SIZE	100026256
10	28	28	100011418	WASHER FLAT 1/2 NARROW ZINC	100011418
11	16	16	200072509	Square Strut Channel Nut, 1/2"-13 Thread Size	200072509
12	10	10	100007939	CAP VINYL .467 X 1/2	100007939
13	1	1	100007928	SIGHT GLASS	100007928
14	16	16	100007925	PAD INSULATING POLYURETHANE LARGE 4.00 X 2.75	100007925
15	2	2	100007896	TORSION HEX ROD 9/16 X 36 RAW	100007896
16	32	32	100007882	Rivet Blind Grip .1875" Large Domed Head Range-0.376-0.5" Steel	100007882
17	8	8	100007873	BOLT SHCS 3/8-16 X 1-1/4 PLATED	100007873
18	4	4	100007869	BOLT SHCS 1/2-13 X 1-3/4 SS	100007869
19	8	8	100007859	RIVET NUT 3/8-16 FLAT KNURLED	100007859
20	8	8	100007733	Bolt Socket Flat Countersunk Head - 1/2-13 UNC - Grade 5 - Zinc - FT - 1"	100007733
21	2	2	100007726	TORSION HEX ROD 7/16 X 36 RAW	100007726
22	2	2	100007682	OFFSET SPRING MOUNT .562	100007682
23	2	2	100007670	SPRING MOUNT ASSY .438	100007670
24	3	3	100007562	NAME PLATE PLEXI PG&E	100007562
25	3	3	100007492	HEX NUT NYLOCK - 1/2-13 UNC - GR5 - ZINC	100007492
26	1	1	100005058	NAME PLATE CAST ALUM PG&E - HIGH VOLTAGE	100005058
27	6	6	100003823	Hex Bolt 1/2-13 UNC ZINC - PT - 1.5"	100003823
28	6	6	100003782	HEX COIL BOLT 3/4 X 4 PLAIN	100003782
29	2	2	100003484	Hex Bolt 1/2-13 UNC ZINC - FT - 0.75"	100003484
30	16	16	100007749	BOLT PENTA 1/2-13 UNC 0.875 HEAD 2.25L SS DRILLED	100007749
31	2	2	100041563	16" CHAIN SAFETY W/WASHER	100041563

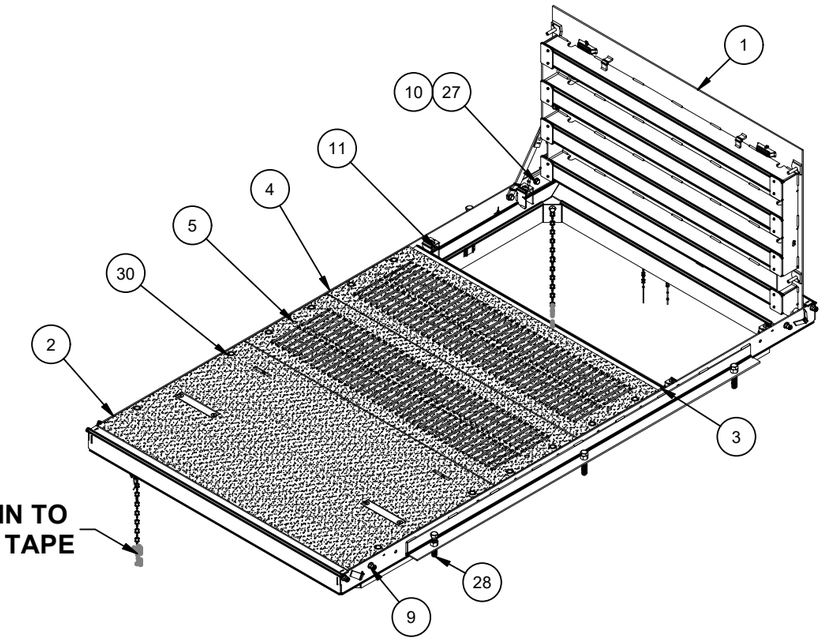

SECURE COTTER PIN TO INSIDE OF FRAME WITH TAPE

STENCIL PAINT "JPC - (Mfg Date)" TOP STIFFENER (BOTH DOORS)

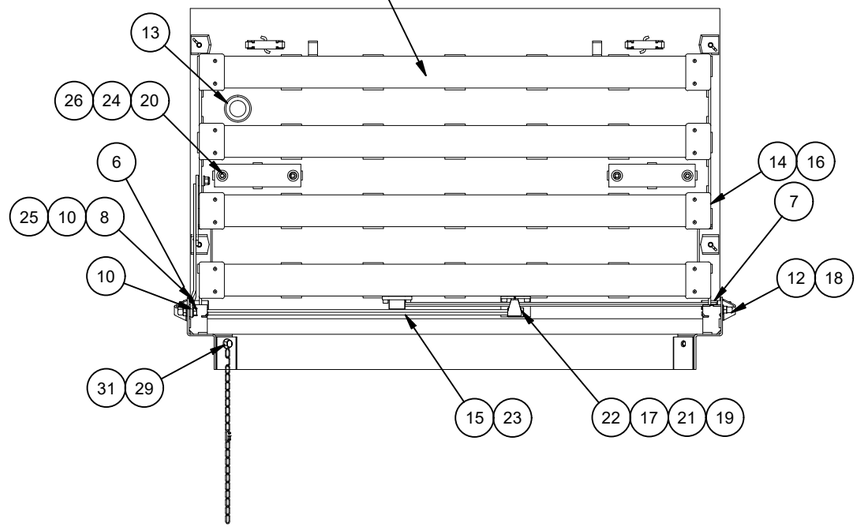

INSPECT SLOT DIMENSIONS PRIOR TO GALV, AND AFTER GALV
MINIMUM SLOT WIDTH AFTER TRAX-PLATING, BUT BEFORE GALV = 0.427"
MINIMUM SLOT WIDTH AFTER TRAX-PLATING AND GALV = 0.409"

REVISION HISTORY		
REV	DESCRIPTION	DATE
A-1	1ST ARTICLE PRODUCTION RELEASE	10/26/22
B-1	UPDATED MODELS WITH CORRECTION FROM SPLICE TEST	11/1/22
C-1	UPDATED TO REFLECT AUDIT CORRECTION	12/2/22
D-1	UPDATED SLOTS SIZE FOR TRAX AND GALV BUILD UP. CLEANED WELDS AND MATCHED WELD CALLOUTS TO MANUFACTURING	3/13/23
E-1	UPDATED NOTES AND WELD CALLOUTS PER PG&E COMMENTS DURING TESTING; CHANGED TO 2.25" COVER BOLTS; ADDED VISUAL WELDS AND MORE WELD INDICATOR NOTHCES FOR MFG PRECISION	6/4/23
F-1	UPDATED LOUVER END WELDS FORM 1" TO 1/2" LG PER PG&E REQUEST	8/17/2023
G-1	ADDED UPDATED SLOT TOLERANCES PER PG&E REQUEST; ADDED STENCIL NOTE AND TAPE NOTE FOR HAIRPIN COTTER	9/11/2023
G-2-1	REPLACED J CONE BASE WITH CAM TOWER BASE	2/2/26

MATERIAL FINISH: Galvanized

MATERIAL SURFACE: TraxPlate™

Infrastructure JENSEN
527 Dunn Circle, Sparks, NV 89431
775-352-2716 FAX: 755-358-8127
JENSENMETALTECH.COM

©2026 Jensen Infrastructure - All rights reserved.
All materials appearing as Jensen Infrastructure documents and the like are proprietary work product and are protected under U.S. copyright and other laws. Unless in conjunction with business conducted with Jensen Infrastructure , any use of Jensen Infrastructure work product without express, written consent is prohibited, and recipient is prohibited from distributing any and all work product to non-approved third parties under penalty of civil action.
This product shall only be produced in a Jensen Infrastructure facility.

PART NUMBER & DESCRIPTION: 100005481
CAS2-54102-AH-TRX-G-SG-GR-PG&E-OH08-TRANSFORMER FVT

REV: G-2-1

WEIGHT: 1561.28 Lbs

DRAWN BY: R. Dohr

SHEET: 2

CREATED: 10/7/2022

MODIFIED: 2/2/2026

100005481.idw

BILL OF MATERIALS

ITEM	ITEM QTY	QTY	PART NUMBER	DESCRIPTION	PART NAME
1	2	1.539 lbmass	100007734	Door Component Steel Stiffener, Bar	200069209
2	2	9.507 lbmass	100007735	Door Component Steel Side Bar	200069208
3	2	2.426 lbmass	100007735	Door Component Steel Side Bar	200069207
4	1	137.868 lbmass	100007735	Door Component Steel Plate, Bottom Nameplate	200069190
5	4	118.675 lbmass	100007734	Door Component Steel Channel	200069186
7	1	1	100041280	SIGHT GLASS BUSHING STL	100041280
8	2	2	100021175	PG&E NAME PLATE BACKING PLATE	100021175
9	2	2	100007916	CLIP PICK HOLE 304SS	100007916
10	4	4	100007728	NUT SELF-CLINCH 1/2-13 S-0813-1 RAW	100007728
11	2	2	100007697	LIFT COVER STL	100007697
12	2	2	100007647	LIFTING BRACKET STEEL LEAF	100007647
13	4	4	100007675	CAM BASE	100007675

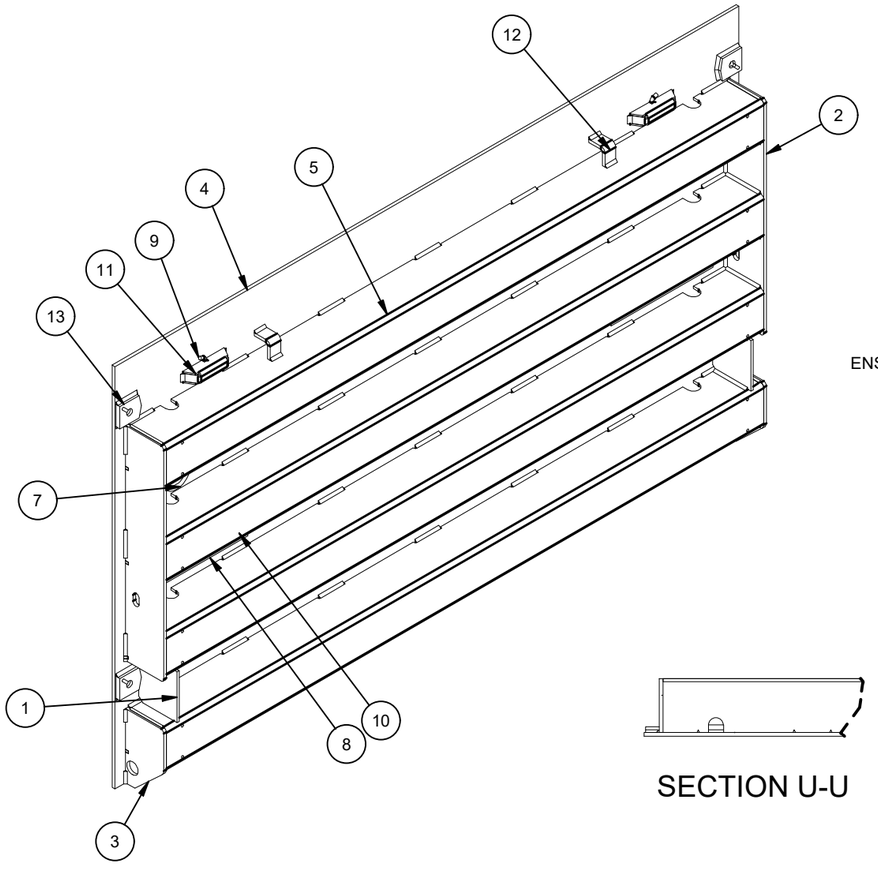

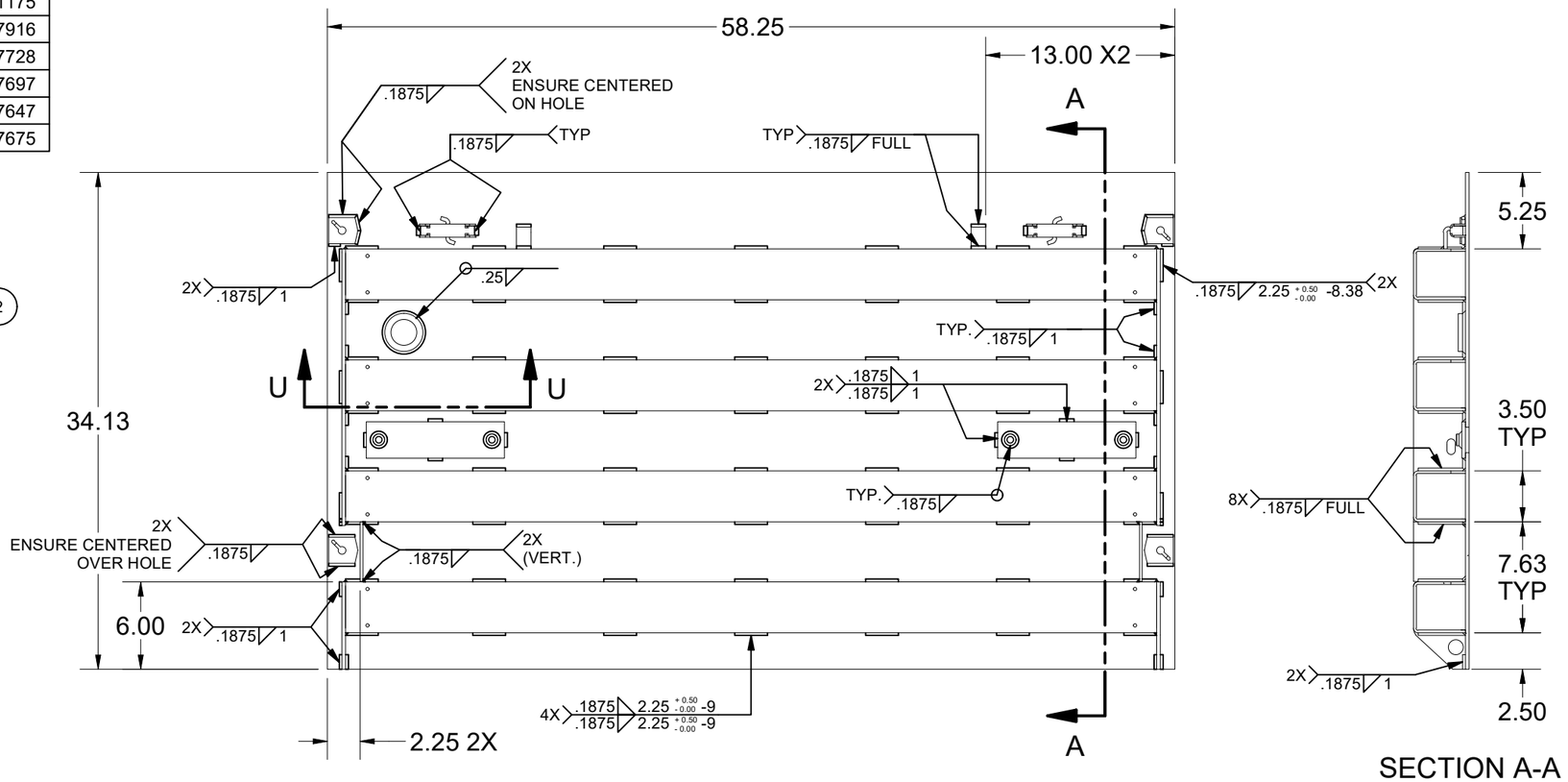

SECTION A-A

USE NOTCHES FOR HOLDING WELDING PATTERN

SECTION U-U

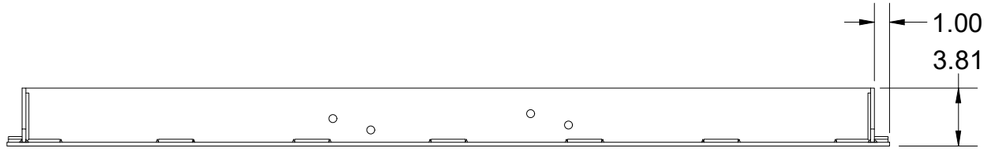

MATERIAL FINISH: Galvanized	Infrastructure JENSEN 527 Dunn Circle, Sparks, NV 89431 775-352-2716 FAX: 755-358-8127 *JENSENMETALTECH.COM*	©2026 Jensen Infrastructure - All rights reserved. All materials appearing as Jensen Infrastructure documents and the like are proprietary work product and are protected under U.S. copyright and other laws. Unless in conjunction with business conducted with Jensen Infrastructure , any use of Jensen Infrastructure work product without express, written consent is prohibited, and recipient is prohibited from distributing any and all work product to non-approved third parties under penalty of civil action. This product shall only be produced in a Jensen Infrastructure facility.	PART NUMBER & DESCRIPTION: 200069189 DAS2-T-54102-H-TRX-G-SG-PG&E-TRANSFORMER FVT — REV: G-2-1
MATERIAL SURFACE: TraxPlate™			WEIGHT: 277.4 Lbs — DRAWN BY: R. Dohr — SHEET: 3
			CREATED: 10/7/2022 — MODIFIED: 2/2/2026

100005481.idw

BILL OF MATERIALS

ITEM	ITEM QTY	QTY	PART NUMBER	DESCRIPTION	PART NAME
1	1	138.201 lbmass	100007735	Door Component Steel Plate, Top Nameplate	200069187
2	4	118.675 lbmass	100007734	Door Component Steel Channel	200069186
4	2	9.507 lbmass	100007735	Door Component Steel Side Bar	200069208
5	2	2.426 lbmass	100007735	Door Component Steel Side Bar	200069207
6	2	1.539 lbmass	100007734	Door Component Steel Stiffener, Bar	200069209
7	2	2	100021175	PG&E NAME PLATE BACKING PLATE	100021175
8	2	2	100007916	CLIP PICK HOLE 304SS	100007916
9	4	4	100007728	NUT SELF-CLINCH 1/2-13 S-0813-1 RAW	100007728
10	2	2	100007697	LIFT COVER STL	100007697
11	2	2	100007647	LIFTING BRACKET STEEL LEAF	100007647
12	4	4	100007675	CAM BASE	100007675

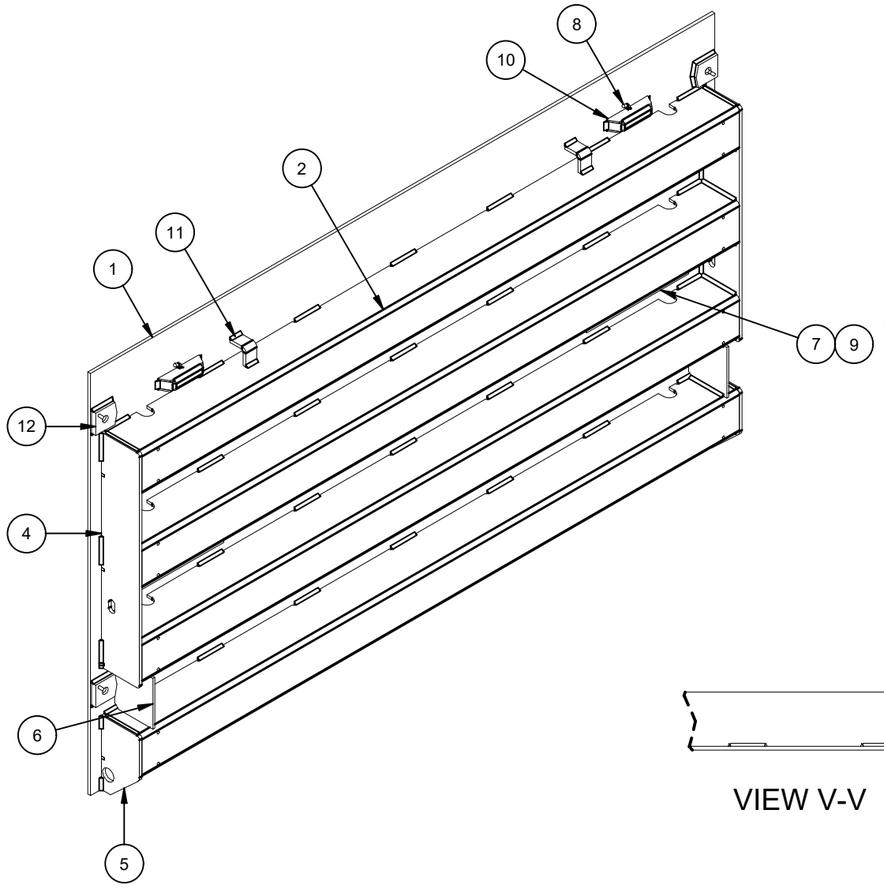

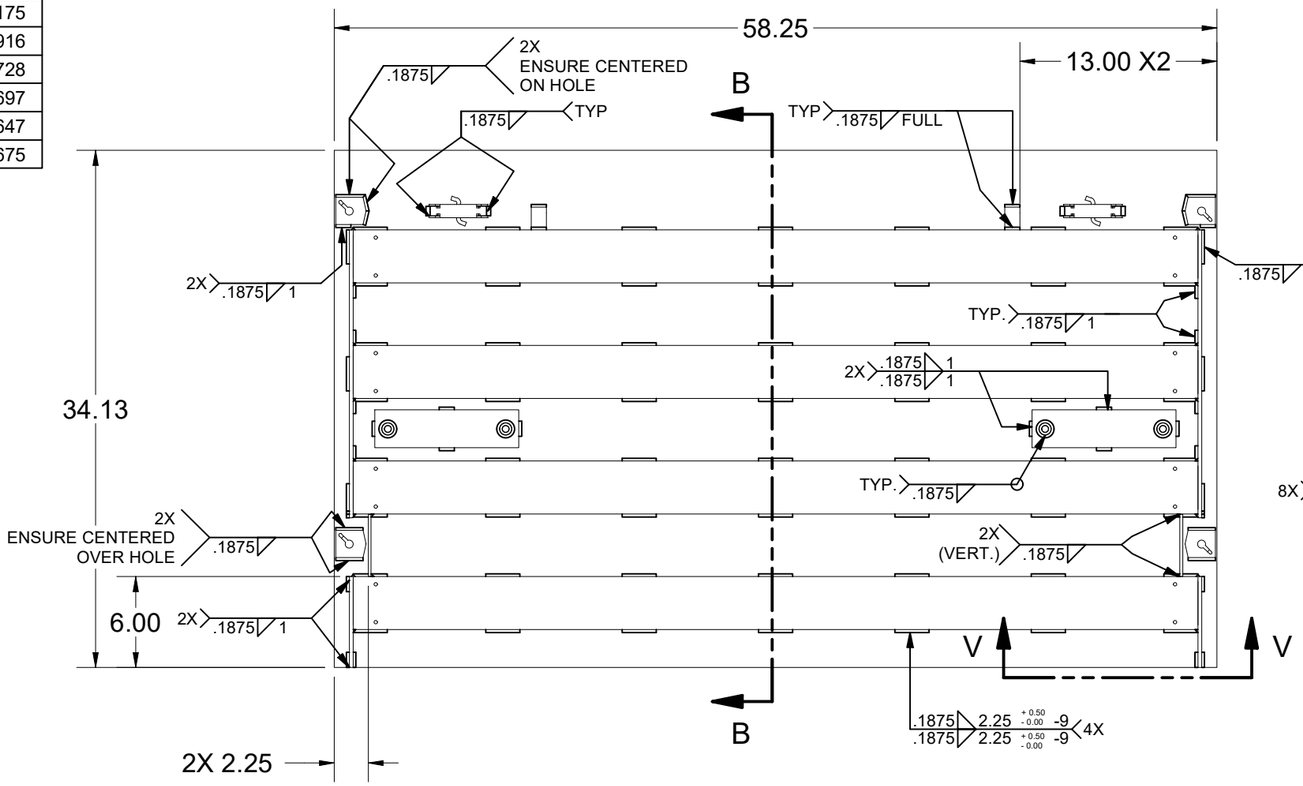

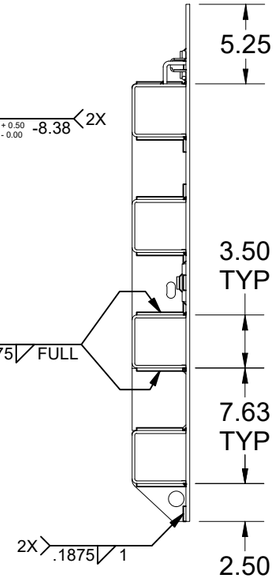

SECTION B-B

USE NOTCHES FOR HOLDING WELDING PATTERN

VIEW V-V

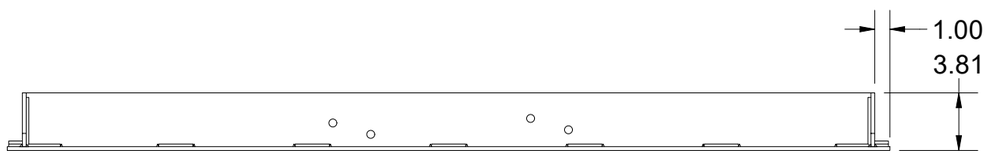

MATERIAL FINISH: Galvanized	Infrastructure JENSEN 527 Dunn Circle, Sparks, NV 89431 775-352-2716 FAX: 755-358-8127 *JENSENMETALTECH.COM*	©2026 Jensen Infrastructure - All rights reserved. All materials appearing as Jensen Infrastructure documents and the like are proprietary work product and are protected under U.S. copyright and other laws. Unless in conjunction with business conducted with Jensen Infrastructure , any use of Jensen Infrastructure work product without express, written consent is prohibited, and recipient is prohibited from distributing any and all work product to non-approved third parties under penalty of civil action. This product shall only be produced in a Jensen Infrastructure facility.	PART NUMBER & DESCRIPTION: 200069185 DAS2-T-54102-H-TRX-G-PG&E-TRANSFORMER FVT WEIGHT: 277.23 Lbs DRAWN BY: R. Dohr CREATED: 10/7/2022 MODIFIED: 2/2/2026	REV: G-2-1 SHEET: 4
MATERIAL SURFACE: TraxPlate™				

100005481.idw

BILL OF MATERIALS

ITEM	ITEM QTY	QTY	PART NUMBER	DESCRIPTION	PART NAME
1	38	67.019 lbmass	100007807	Door Component Steel Stiffener, Bar	200069196
2	2	2.845 lbmass	100007807	Door Component Steel Stiffener, Plate	200069195
3	1	59.818 lbmass	100007735	Door Component Steel Plate, Top	200069183
4	4	4	100007675	CAM BASE	100007675
5	2	22.863 lbmass	100007735	Door Component Steel Lap Bar	200069182

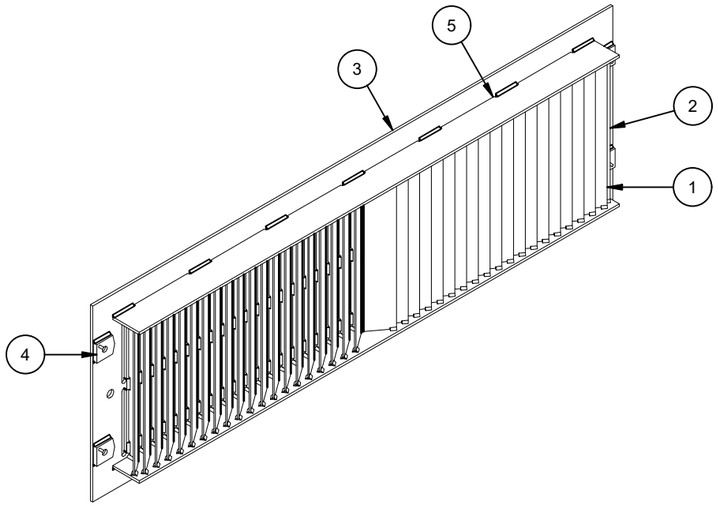

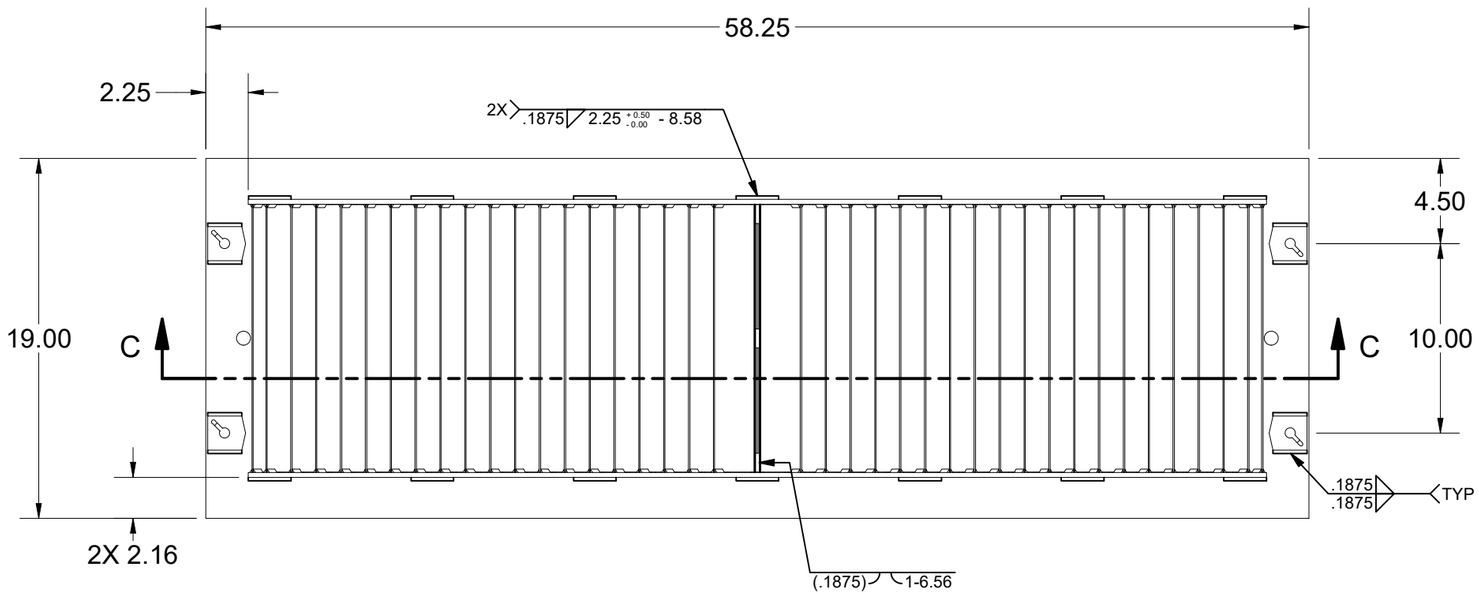

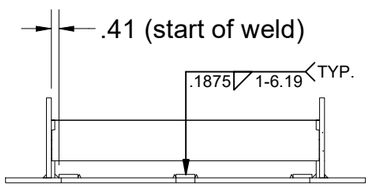

SECTION D-D

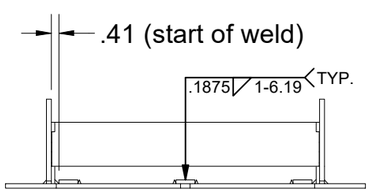

SECTION E-E

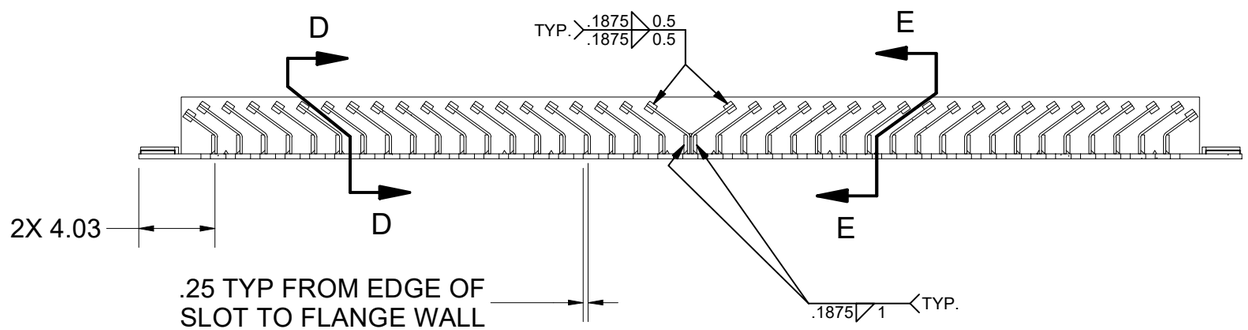

SECTION C-C

MATERIAL FINISH: Galvanized	Infrastructure JENSEN 527 Dunn Circle, Sparks, NV 89431 775-352-2716 FAX: 755-358-8127 *JENSENMETALTECH.COM*	©2026 Jensen Infrastructure - All rights reserved. All materials appearing as Jensen Infrastructure documents and the like are proprietary work product and are protected under U.S. copyright and other laws. Unless in conjunction with business conducted with Jensen Infrastructure , any use of Jensen Infrastructure work product without express, written consent is prohibited, and recipient is prohibited from distributing any and all work product to non-approved third parties under penalty of civil action. This product shall only be produced in a Jensen Infrastructure facility.	PART NUMBER & DESCRIPTION: 200069181 DAS1-T-54102-D-TRX-G-PG&E-TRANSFORMER FVT WEIGHT: 155.29 Lbs DRAWN BY: R. Dohr CREATED: 10/7/2022 MODIFIED: 2/2/2026	REV: G-2-1 SHEET: 5
MATERIAL SURFACE: TraxPlate™				

100005481.idw

BILL OF MATERIALS

ITEM	ITEM QTY	QTY	PART NUMBER	DESCRIPTION	PART NAME
1	2	52.406 lbmass	100007735	Frame Component Leveling Angle	200069902
2	4	2.200 lbmass	100007734	Frame Component Steel	200069192
3	2	85.804 lbmass	100007734	Frame Component Steel Frame End, Adjustable	200069193
4	4	4	200018691	FRAME BOLT DOUBLER SLOT	200018691
5	16	7.204 lbmass	100007734	SQUARE NUT BRACKET-CUSTOM PG&E FVT	200069159
6	16	5.006 lbmass	100007734	STANDOFF SIDEWALL	200069158
7	16	16	200069094	STANDOFF BOLTING PLATFORM	200069094
8	2	117.244 lbmass	100007734	Frame Component Steel Frame Side, Adjustable	200069211
9	4	4	100007728	NUT SELF-CLINCH 1/2-13 S-0813-1 RAW	100007728
10	1	1	100007700	SIGHT GLASS LIGHT CLIP	100007700
11	4	4	100007641	FRAME LIFTING BRACKET	100007641
12	6	6	100007011	HEX COIL NUT 3/4-4.5 PLAIN	100007011

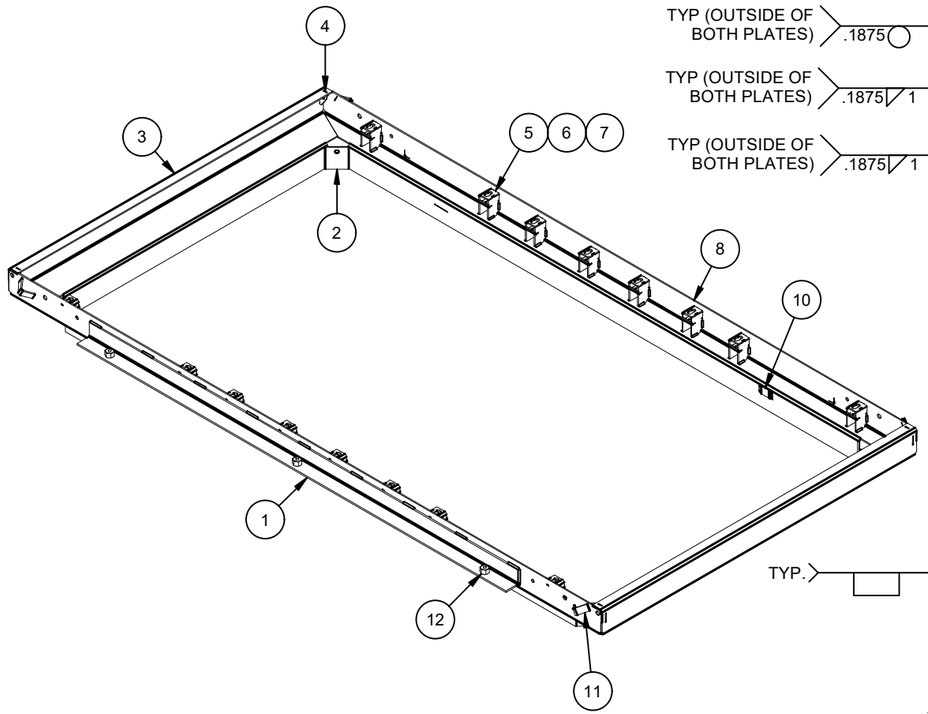

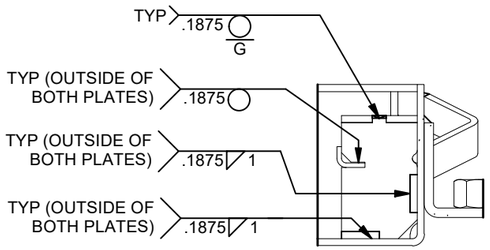

SECTION H-H

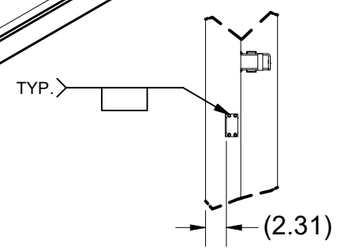

SECTION G-G



DETAIL Y

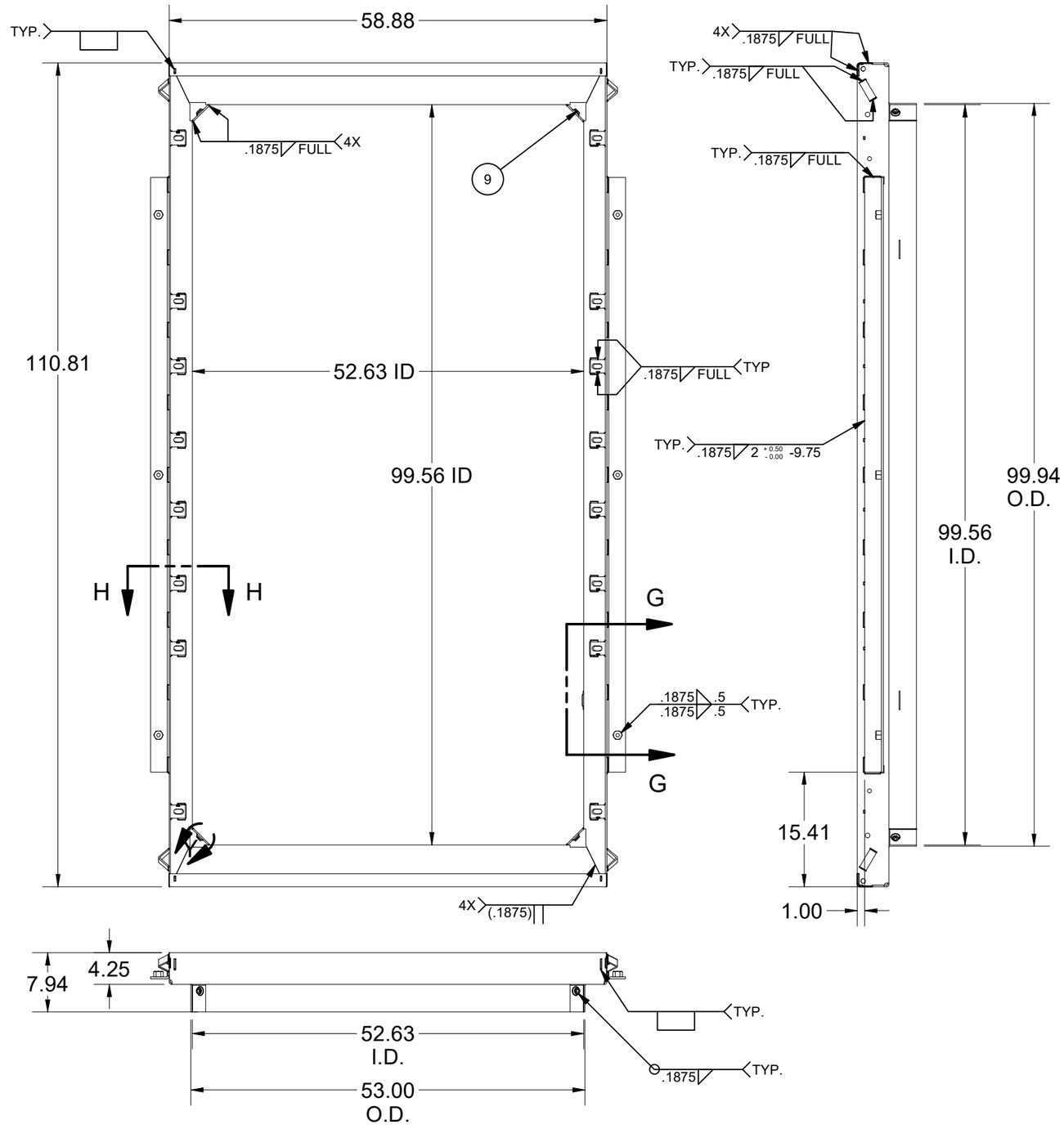

100005481.idw

MATERIAL FINISH: Galvanized	Infrastructure JENSEN 527 Dunn Circle, Sparks, NV 89431 775-352-2716 FAX: 755-358-8127 *JENSENMETALTECH.COM*	©2026 Jensen Infrastructure - All rights reserved. All materials appearing as Jensen Infrastructure documents and the like are proprietary work product and are protected under U.S. copyright and other laws. Unless in conjunction with business conducted with Jensen Infrastructure , any use of Jensen Infrastructure work product without express, written consent is prohibited, and recipient is prohibited from distributing any and all work product to non-approved third parties under penalty of civil action. This product shall only be produced in a Jensen Infrastructure facility.	PART NUMBER & DESCRIPTION: 200069180 FAS-54102-AH-G-GR-PG&E-OH07-TRANSFORMER FVT WEIGHT: 275.04 Lbs DRAWN BY: R. Dohr CREATED: 10/7/2022 MODIFIED: 2/2/2026
MATERIAL SURFACE: Smooth			REV: G-2-1 SHEET: 6

BILL OF MATERIALS

ITEM	ITEM QTY	QTY	PART NUMBER	DESCRIPTION	PART NAME
1	1	57.250 in	100005167	STRUCTURAL STEEL RECTANGULAR TUBE - 6 x 4 x 3/8	100005167
2	2	12.000 in	100005205	STRUCTURAL ANGLE UNEQUAL - A36 STEEL - L 3 x 2 x 3/8	100005205
3	2	95.500 in	100005184	STRUCTURAL ANGLE EQUAL - A36 STEEL - L 1.5 x 1.5 x 1/4	100005184

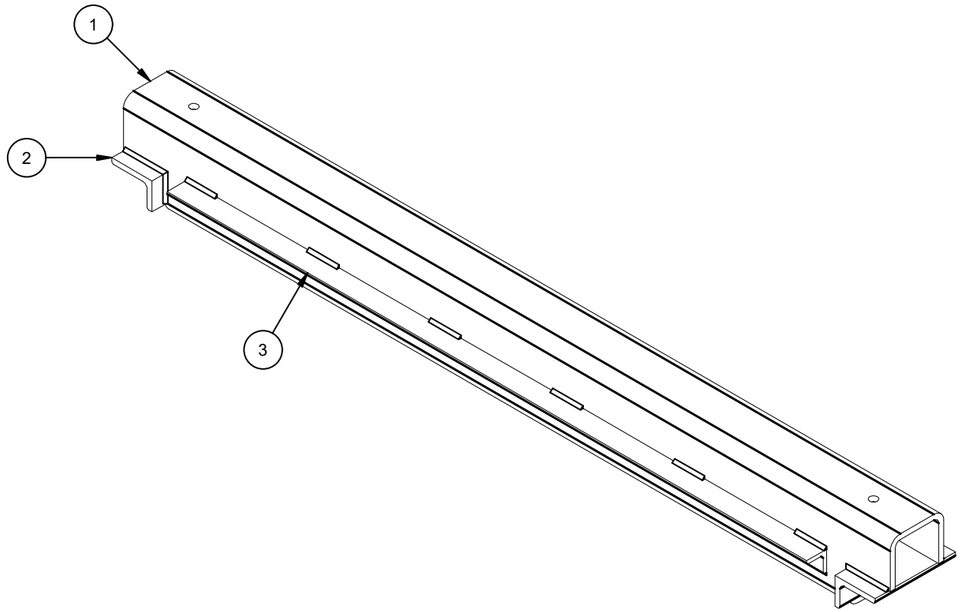

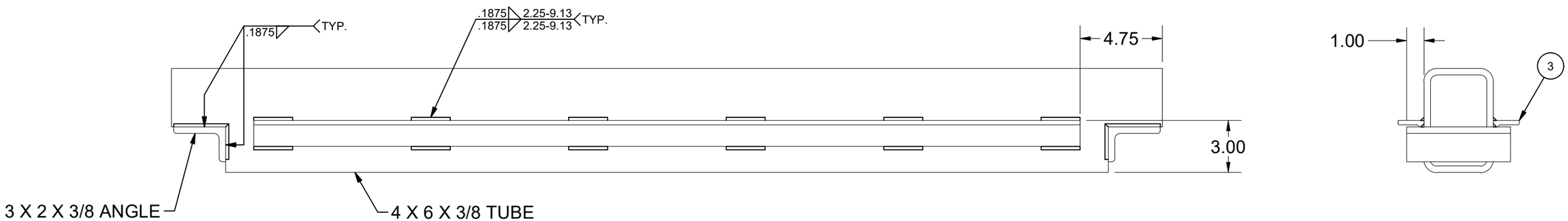

100005481.idw

MATERIAL FINISH: Galvanized	Infrastructure JENSEN 527 Dunn Circle, Sparks, NV 89431 775-352-2716 FAX: 755-358-8127 *JENSENMETALTECH.COM*	©2026 Jensen Infrastructure - All rights reserved. All materials appearing as Jensen Infrastructure documents and the like are proprietary work product and are protected under U.S. copyright and other laws. Unless in conjunction with business conducted with Jensen Infrastructure , any use of Jensen Infrastructure work product without express, written consent is prohibited, and recipient is prohibited from distributing any and all work product to non-approved third parties under penalty of civil action. This product shall only be produced in a Jensen Infrastructure facility.	PART NUMBER & DESCRIPTION: 200068728 Support Beam 57.25in W Beam 54102 PG&E FVT
MATERIAL SURFACE: Smooth			WEIGHT: 126.41 Lbs DRAWN BY: R. Dohr CREATED: 10/7/2022 MODIFIED: 2/2/2026

REV: G-2-1

SHEET: 7

BURN LIST - BOM

PART NAME	ITEM QTY	QTY	DESCRIPTION	STOCK NUMBER	MATERIAL	MASS	SHEET
200069207	4	4.851 lbmass	Door Component Steel Side Bar	100007735	STL ASTM A36 SM-HRPO RAW .250	1.213 lbmass	10
200069208	4	19.013 lbmass	Door Component Steel Side Bar	100007735	STL ASTM A36 SM-HRPO RAW .250	4.753 lbmass	11
200069186	8	237.351 lbmass	Door Component Steel Channel	100007734	STL ASTM A36 SM-HRPO 60X120 RAW .1875	29.669 lbmass	12
200069187	1	138.201 lbmass	Door Component Steel Plate, Top Nameplate	100007735	STL ASTM A36 SM-HRPO RAW .250	138.201 lbmass	13
200069209	4	3.077 lbmass	Door Component Steel Stiffener, Bar	100007734	STL ASTM A36 SM-HRPO 60X120 RAW .1875	0.769 lbmass	14
200069190	1	137.868 lbmass	Door Component Steel Plate, Bottom Nameplate	100007735	STL ASTM A36 SM-HRPO RAW .250	137.868 lbmass	15
200069193	2	85.804 lbmass	Frame Component Steel Frame End, Adjustable	100007734	STL ASTM A36 SM-HRPO 60X120 RAW .1875	42.902 lbmass	16
200069211	2	117.244 lbmass	Frame Component Steel Frame Side, Adjustable	100007734	STL ASTM A36 SM-HRPO 60X120 RAW .1875	58.622 lbmass	17
200069192	4	2.200 lbmass	Frame Component Steel	100007734	STL ASTM A36 SM-HRPO 60X120 RAW .1875	0.550 lbmass	18
200069159	16	7.204 lbmass	SQUARE NUT BRACKET-CUSTOM PG&E FVT	100007734	STL ASTM A36 SM-HRPO 60X120 RAW .1875	0.450 lbmass	19
200069158	16	5.006 lbmass	STANDOFF SIDEWALL	100007734	STL ASTM A36 SM-HRPO 60X120 RAW .1875	0.313 lbmass	20
200069183	2	119.637 lbmass	Door Component Steel Plate, Top	100007735	STL ASTM A36 SM-HRPO RAW .250	59.818 lbmass	21
200069182	4	45.726 lbmass	Door Component Steel Lap Bar	100007735	STL ASTM A36 SM-HRPO RAW .250	11.431 lbmass	22
200069195	4	5.690 lbmass	Door Component Steel Stiffener, Plate	100007807	STL ASTM A36 GA-11 SM-HRS RAW .1196	1.422 lbmass	23
200069196	76	134.039 lbmass	Door Component Steel Stiffener, Bar	100007807	STL ASTM A36 GA-11 SM-HRS RAW .1196	1.764 lbmass	24
200069902	2	52.406 lbmass	Frame Component Leveling Angle	100007735	STL ASTM A36 SM-HRPO RAW .250	26.203 lbmass	25

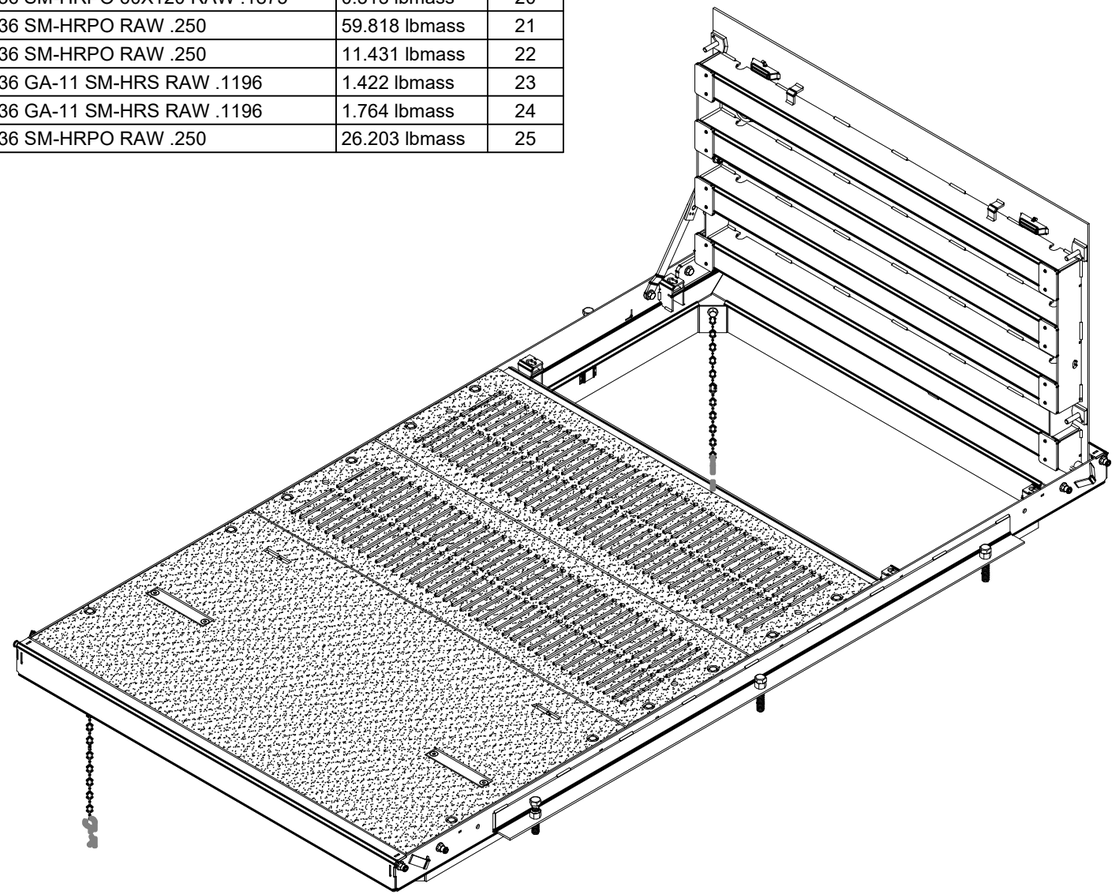

100005481.idw

MATERIAL FINISH: Galvanized

MATERIAL SURFACE: TraxPlate™

Infrastructure JENSEN
527 Dunn Circle, Sparks, NV 89431
775-352-2716 FAX: 755-358-8127
JENSENMETALTECH.COM

©2026 Jensen Infrastructure - All rights reserved.
All materials appearing as Jensen Infrastructure documents and the like are proprietary work product and are protected under U.S. copyright and other laws. Unless in conjunction with business conducted with Jensen Infrastructure , any use of Jensen Infrastructure work product without express, written consent is prohibited, and recipient is prohibited from distributing any and all work product to non-approved third parties under penalty of civil action.
This product shall only be produced in a Jensen Infrastructure facility.

PART NUMBER & DESCRIPTION: 100005481
CAS2-54102-AH-TRX-G-SG-GR-PG&E-OH08-TRANSFORMER FVT

REV: G-2-1

WEIGHT: 1561.28 Lbs

DRAWN BY: R. Dohr

SHEET: 8

CREATED: 10/7/2022

MODIFIED: 2/2/2026

CUT LIST - BOM

PART NAME	ITEM QTY	BASE QTY	QTY	DESCRIPTION	PART NUMBER	MASS	SHEET
100005184	6	47.75 in	286.500 in	STRUCTURAL ANGLE EQUAL - A36 STEEL - L 1.5 x 1.5 x 1/4	100005184	9.368 lbmass	
100005205	6	6.000 in	36.000 in	STRUCTURAL ANGLE UNEQUAL - A36 STEEL - L 3 x 2 x 3/8	100005205	2.968 lbmass	
200068704	3	57.250 in	171.750 in	STRUCTURAL STEEL RECTANGULAR TUBE - 6 x 4 x 3/8	100005167	101.376 lbmass	26

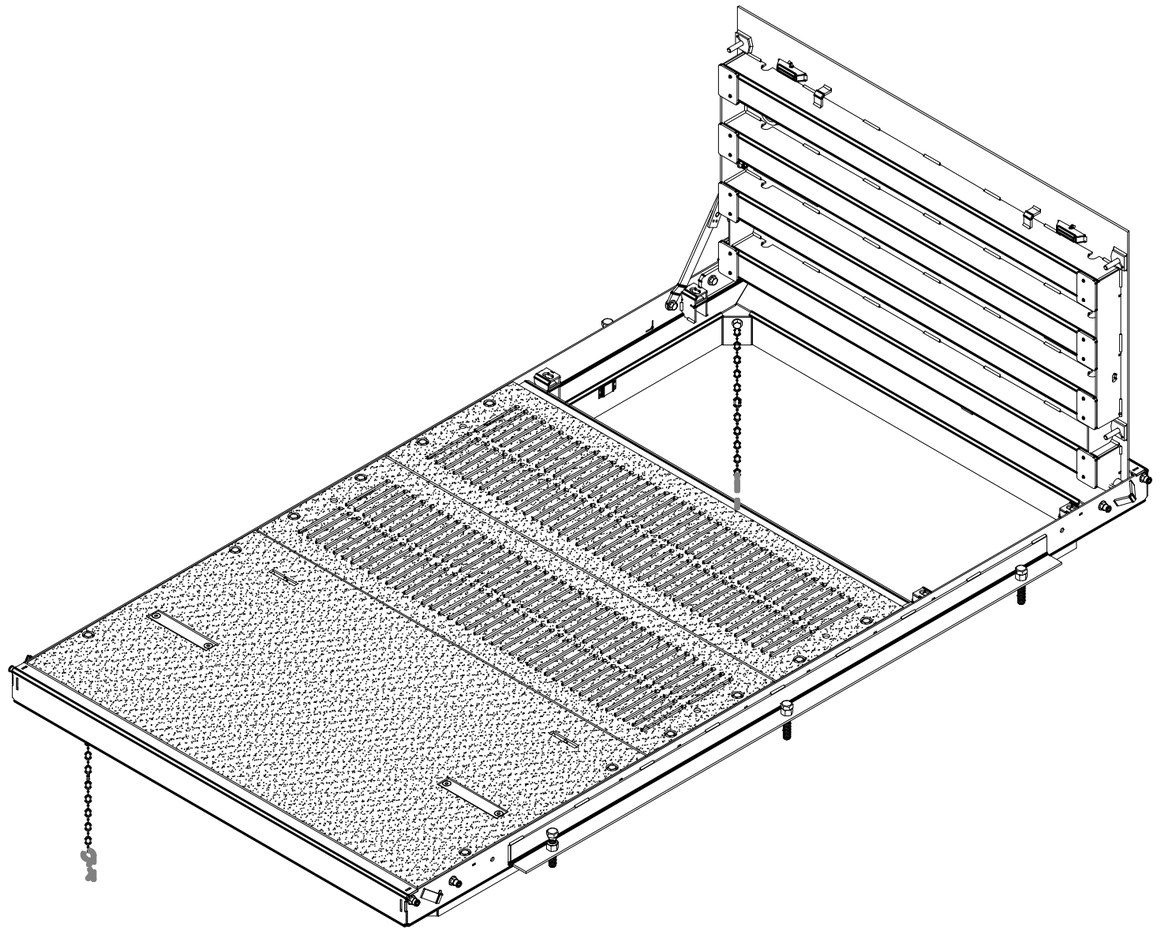

100005481.idw

MATERIAL FINISH:
Galvanized

MATERIAL SURFACE:
TraxPlate™

Infrastructure
JENSEN
527 Dunn Circle, Sparks, NV 89431
775-352-2716 FAX: 755-358-8127
JENSENMETALTECH.COM

©2026 Jensen Infrastructure - All rights reserved.
All materials appearing as Jensen Infrastructure documents and the like are proprietary work product and are protected under U.S. copyright and other laws. Unless in conjunction with business conducted with Jensen Infrastructure , any use of Jensen Infrastructure work product without express, written consent is prohibited, and recipient is prohibited from distributing any and all work product to non-approved third parties under penalty of civil action.
This product shall only be produced in a Jensen Infrastructure facility.

PART NUMBER & DESCRIPTION: 100005481
CAS2-54102-AH-TRX-G-SG-GR-PG&E-OH08-TRANSFORMER FVT

REV: G-2-1

WEIGHT: 1561.28 Lbs

DRAWN BY: R. Dohr

SHEET: 9

CREATED: 10/7/2022

MODIFIED: 2/2/2026

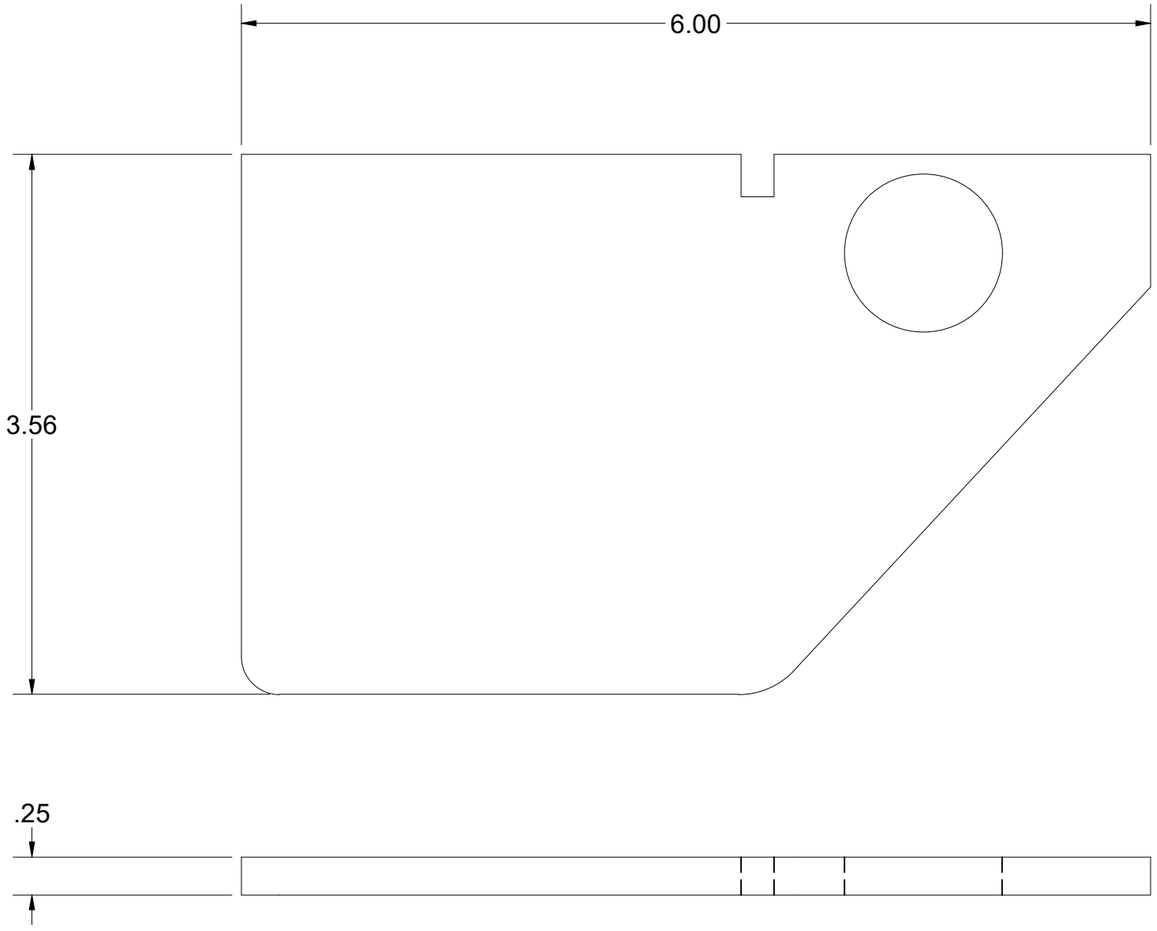

BEND TABLE				MATERIAL IFS: 100007735
BEND RADIUS	V-OPENING	BEND ANGLE	BEND DEDUCTION	MATERIAL THK: 0.25
-	-	-	-	MAT DESCRIPTION: STL ASTM A36 SM-HRPO RAW .250

Infrastructure
JENSEN
527 Dunn Circle, Sparks, NV 89431
775-352-2716 FAX: 755-358-8127
JENSENMETALTECH.COM

©2026 Jensen Infrastructure - All rights reserved.
All materials appearing as Jensen Infrastructure documents and the like are proprietary work product and are protected under U.S. copyright and other laws. Unless in conjunction with business conducted with Jensen Infrastructure , any use of Jensen Infrastructure work product without express, written consent is prohibited, and recipient is prohibited from distributing any and all work product to non-approved third parties under penalty of civil action.
This product shall only be produced in a Jensen Infrastructure facility.

NAME & DESCRIPTION:	200069207 Door Component Steel Side Bar	REV:
WEIGHT: 1.213 lbmass	DRAWN BY: R. Dohr	SHEET: 10 OF 26
CREATED: 10/7/2022	MODIFIED: 2/2/2026	

100005481.idw

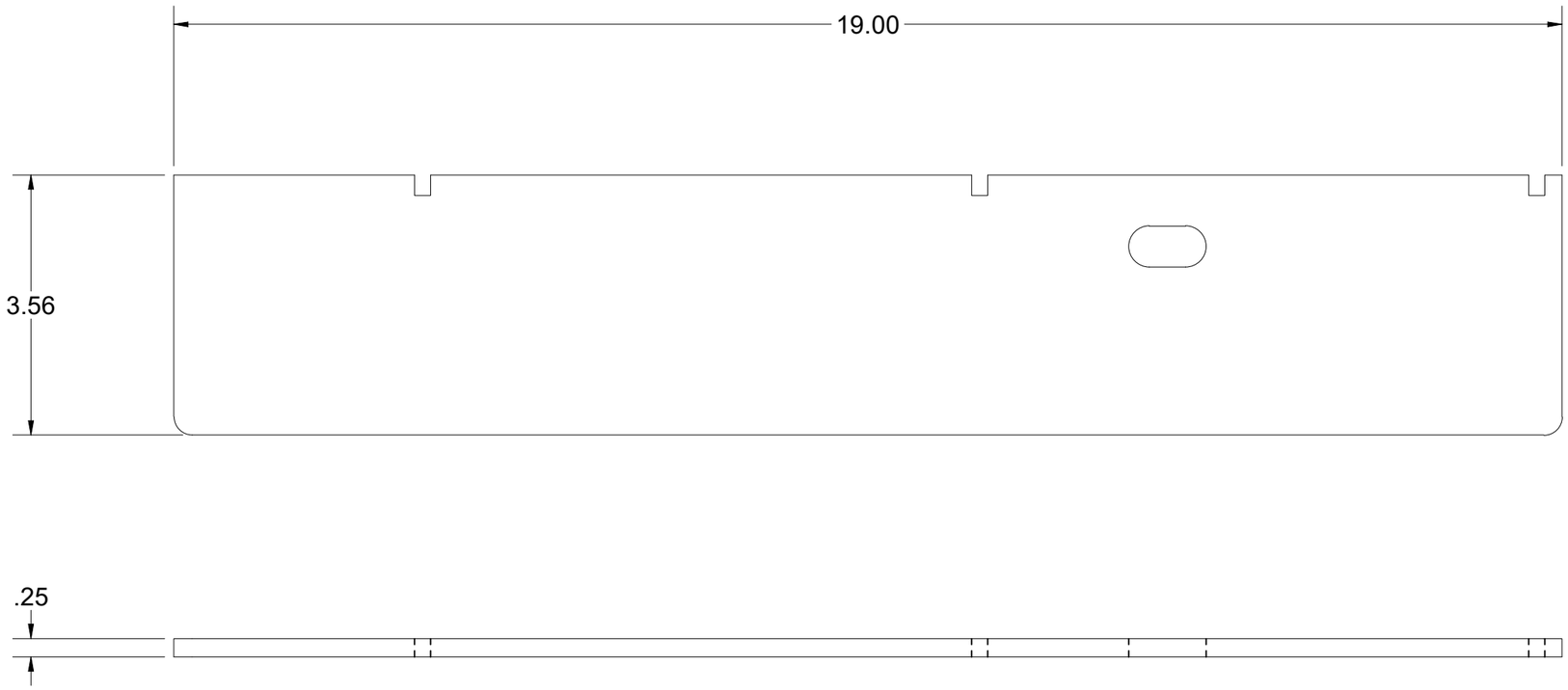

BEND TABLE				MATERIAL IFS: 100007735			
BEND RADIUS	V-OPENING	BEND ANGLE	BEND DEDUCTION	MATERIAL THK: 0.25			
-	-	-	-	MAT DESCRIPTION: STL ASTM A36 SM-HRPO RAW .250			

Infrastructure
JENSEN
527 Dunn Circle, Sparks, NV 89431
775-352-2716 FAX: 755-358-8127
JENSENMETALTECH.COM

©2026 Jensen Infrastructure - All rights reserved.
All materials appearing as Jensen Infrastructure documents and the like are proprietary work product and are protected under U.S. copyright and other laws. Unless in conjunction with business conducted with Jensen Infrastructure , any use of Jensen Infrastructure work product without express, written consent is prohibited, and recipient is prohibited from distributing any and all work product to non-approved third parties under penalty of civil action.
This product shall only be produced in a Jensen Infrastructure facility.

NAME & DESCRIPTION: 200069208 Door Component Steel Side Bar		REV: G-2-1
WEIGHT: 4.753 lbmass	DRAWN BY: R. Dohr	SHEET: 11 OF 26
CREATED: 10/7/2022	MODIFIED: 2/2/2026	

100005481.idw

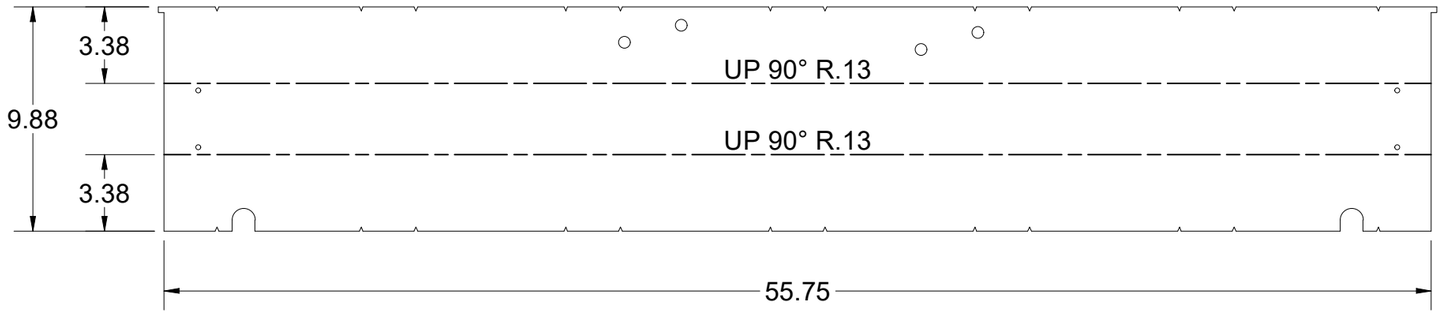

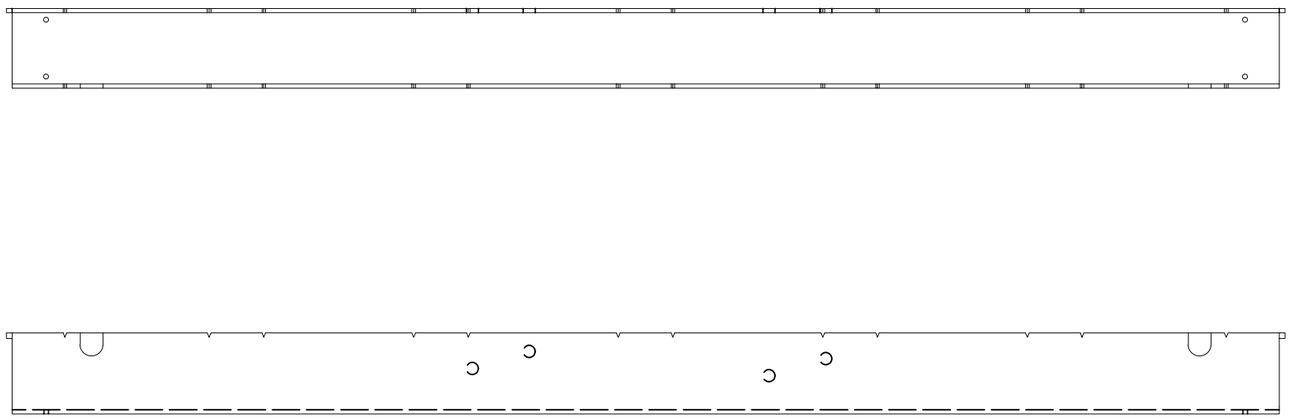

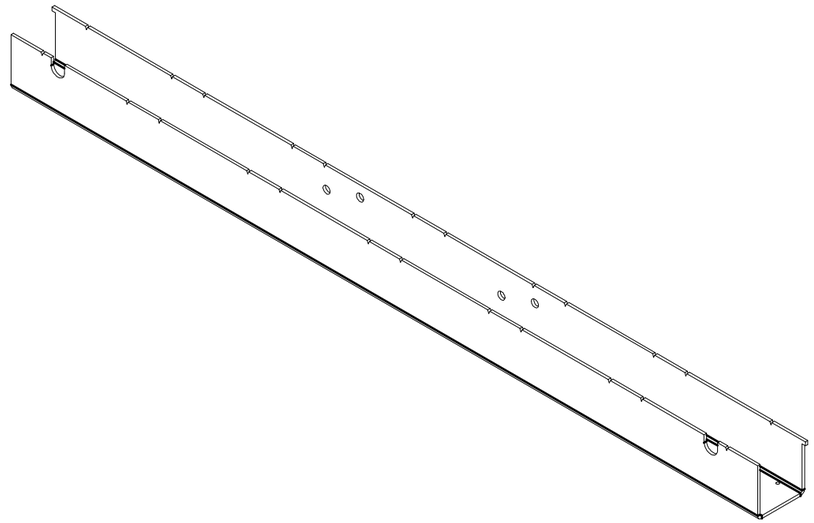

100005481.idw

BEND TABLE				MATERIAL IFS: 100007734
BEND RADIUS	V-OPENING	BEND ANGLE	BEND DEDUCTION	MATERIAL THK: 0.1875
0.125	2	90	0.3750	MAT DESCRIPTION: STL ASTM A36 SM-HRPO 60X120 RAW .1875

Infrastructure
JENSEN
527 Dunn Circle, Sparks, NV 89431
775-352-2716 FAX: 755-358-8127
JENSENMETALTECH.COM

©2026 Jensen Infrastructure - All rights reserved.
All materials appearing as Jensen Infrastructure documents and the like are proprietary work product and are protected under U.S. copyright and other laws. Unless in conjunction with business conducted with Jensen Infrastructure , any use of Jensen Infrastructure work product without express, written consent is prohibited, and recipient is prohibited from distributing any and all work product to non-approved third parties under penalty of civil action.
This product shall only be produced in a Jensen Infrastructure facility.

NAME & DESCRIPTION:	200069186 Door Component Steel Channel	REV:
WEIGHT: 29.669 lbmass	DRAWN BY: R. Dohr	SHEET: 12 OF 26
CREATED: 10/7/2022	MODIFIED: 2/2/2026	

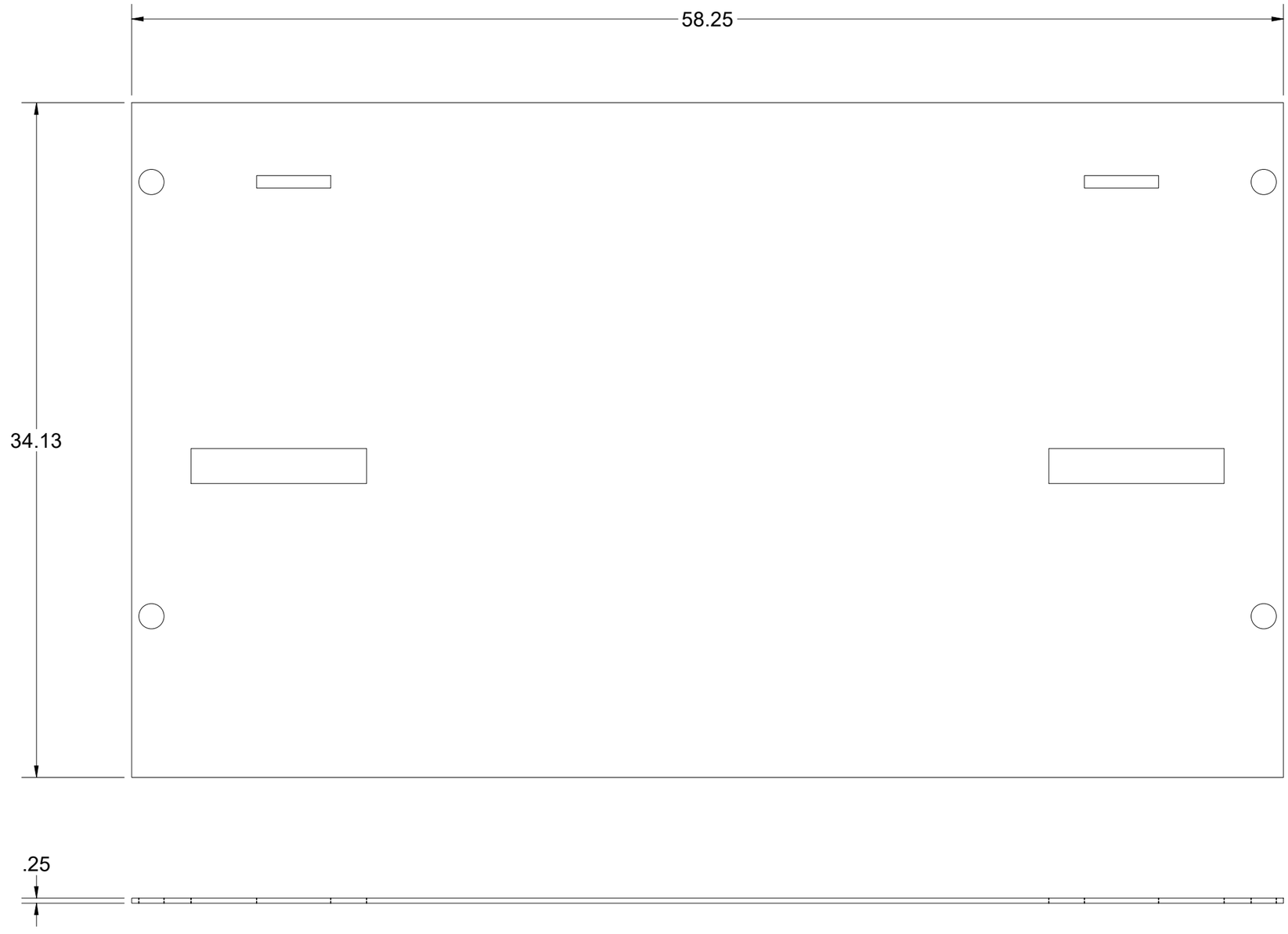

100005481.idw

BEND TABLE				MATERIAL IFS: 100007735			
BEND RADIUS	V-OPENING	BEND ANGLE	BEND DEDUCTION	MATERIAL THK: 0.25			
-	-	-	-	MAT DESCRIPTION: STL ASTM A36 SM-HRPO RAW .250			

Infrastructure
JENSEN
527 Dunn Circle, Sparks, NV 89431
775-352-2716 FAX: 755-358-8127
JENSENMETALTECH.COM

©2026 Jensen Infrastructure - All rights reserved.
All materials appearing as Jensen Infrastructure documents and the like are proprietary work product and are protected under U.S. copyright and other laws. Unless in conjunction with business conducted with Jensen Infrastructure , any use of Jensen Infrastructure work product without express, written consent is prohibited, and recipient is prohibited from distributing any and all work product to non-approved third parties under penalty of civil action.
This product shall only be produced in a Jensen Infrastructure facility.

NAME & DESCRIPTION: 200069187 Door Component Steel Plate, Top Nameplate		REV: G-2-1
WEIGHT: 138.201 lbmass	DRAWN BY: R. Dohr	SHEET: 13 OF 26
CREATED: 10/7/2022	MODIFIED: 2/2/2026	

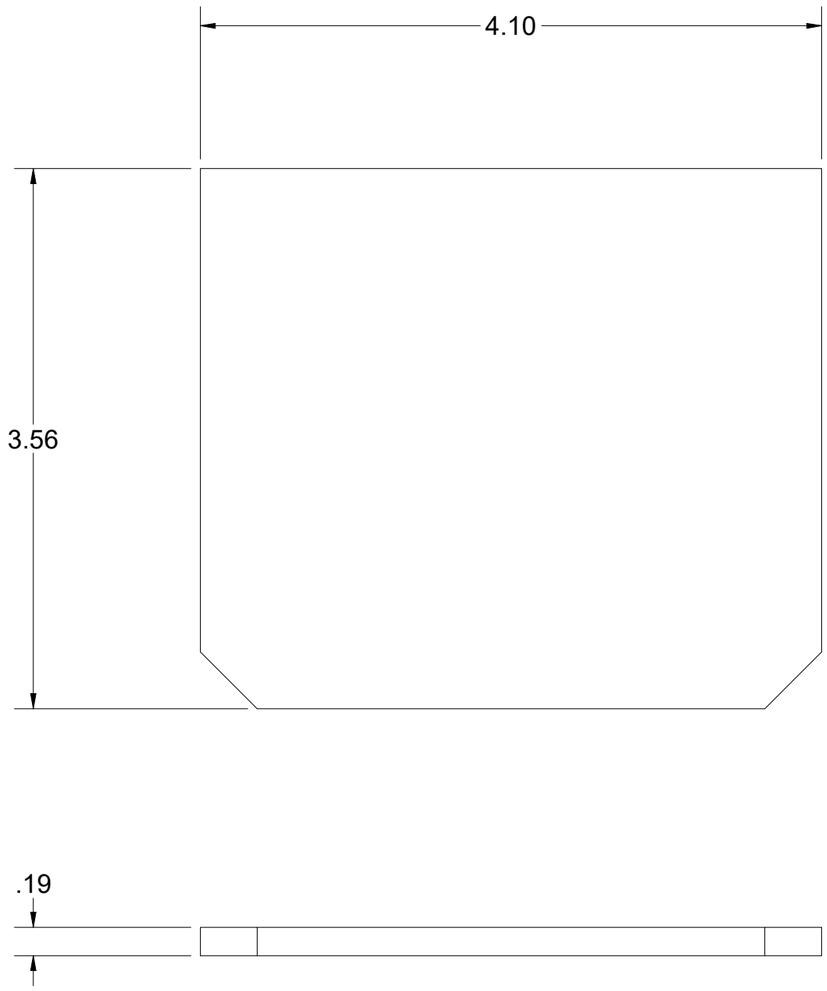

BEND TABLE				MATERIAL IFS: 100007734
BEND RADIUS	V-OPENING	BEND ANGLE	BEND DEDUCTION	MATERIAL THK: 0.1875
-	-	-	-	MAT DESCRIPTION: STL ASTM A36 SM-HRPO 60X120 RAW .1875

Infrastructure
JENSEN
527 Dunn Circle, Sparks, NV 89431
775-352-2716 FAX: 755-358-8127
JENSENMETALTECH.COM

©2026 Jensen Infrastructure - All rights reserved.
All materials appearing as Jensen Infrastructure documents and the like are proprietary work product and are protected under U.S. copyright and other laws. Unless in conjunction with business conducted with Jensen Infrastructure , any use of Jensen Infrastructure work product without express, written consent is prohibited, and recipient is prohibited from distributing any and all work product to non-approved third parties under penalty of civil action.
This product shall only be produced in a Jensen Infrastructure facility.

NAME & DESCRIPTION: 200069209 Door Component Steel Stiffener, Bar		REV: G-2-1
WEIGHT: 0.769 lbmass	DRAWN BY: R. Dohr	SHEET: 14 OF 26
CREATED: 10/7/2022	MODIFIED: 2/2/2026	

100005481.idw

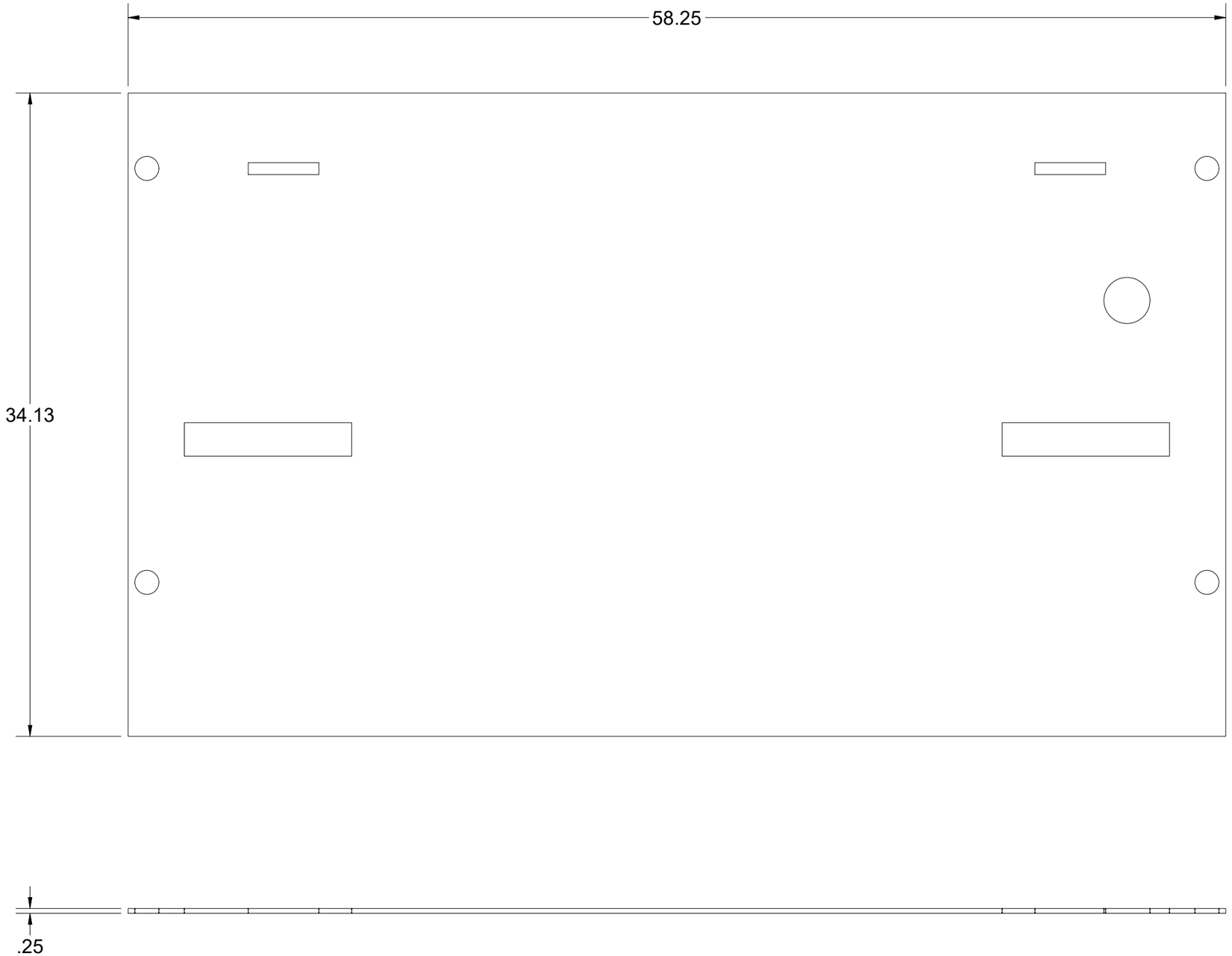

100005481.idw

BEND TABLE				MATERIAL IFS: 100007735
BEND RADIUS	V-OPENING	BEND ANGLE	BEND DEDUCTION	MATERIAL THK: 0.25
-	-	-	-	MAT DESCRIPTION: STL ASTM A36 SM-HRPO RAW .250

Infrastructure
JENSEN
527 Dunn Circle, Sparks, NV 89431
775-352-2716 FAX: 755-358-8127
JENSENMETALTECH.COM

©2026 Jensen Infrastructure - All rights reserved.
All materials appearing as Jensen Infrastructure documents and the like are proprietary work product and are protected under U.S. copyright and other laws. Unless in conjunction with business conducted with Jensen Infrastructure , any use of Jensen Infrastructure work product without express, written consent is prohibited, and recipient is prohibited from distributing any and all work product to non-approved third parties under penalty of civil action.
This product shall only be produced in a Jensen Infrastructure facility.

NAME & DESCRIPTION: 200069190 Door Component Steel Plate, Bottom Nameplate		REV: G-2-1
WEIGHT: 137.868 lbmass	DRAWN BY: R. Dohr	SHEET: 15 OF 26
CREATED: 10/7/2022	MODIFIED: 2/2/2026	

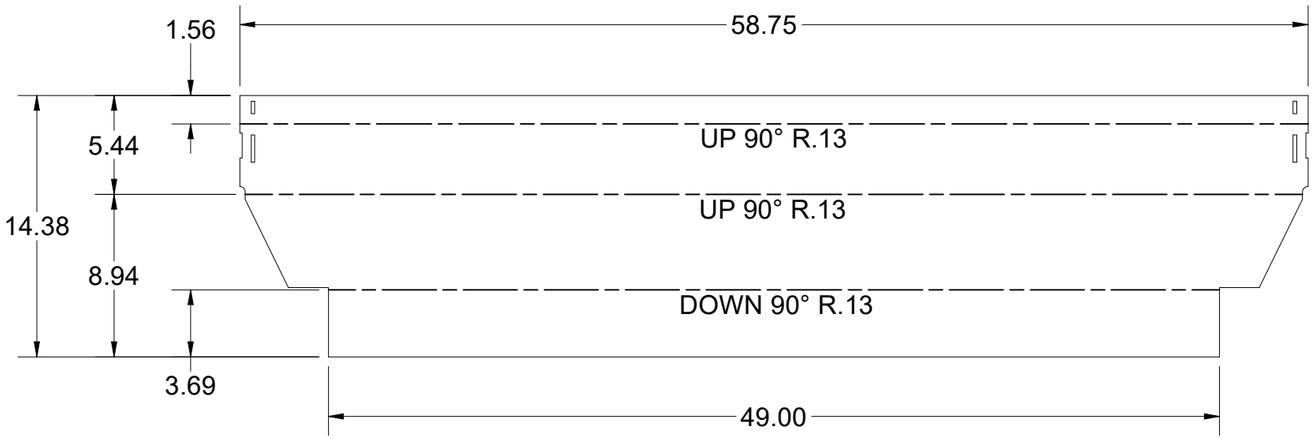

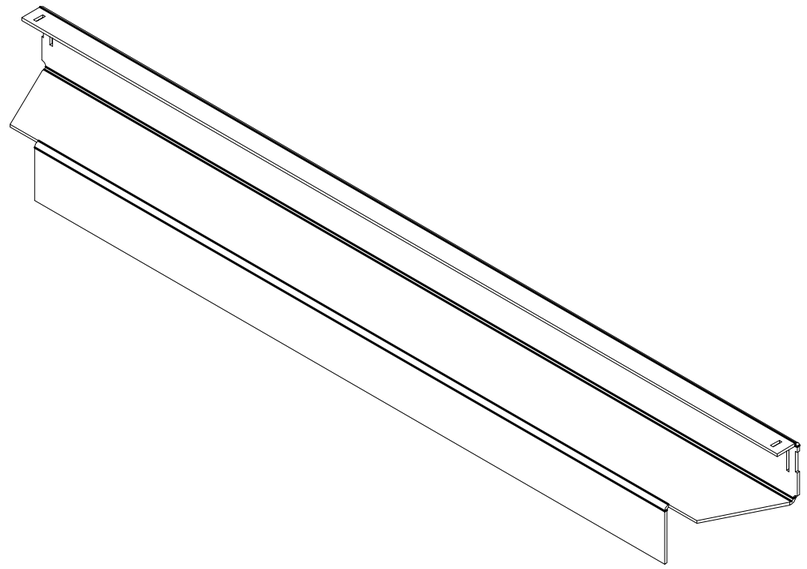



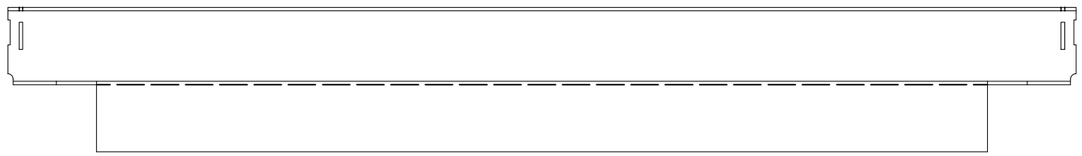

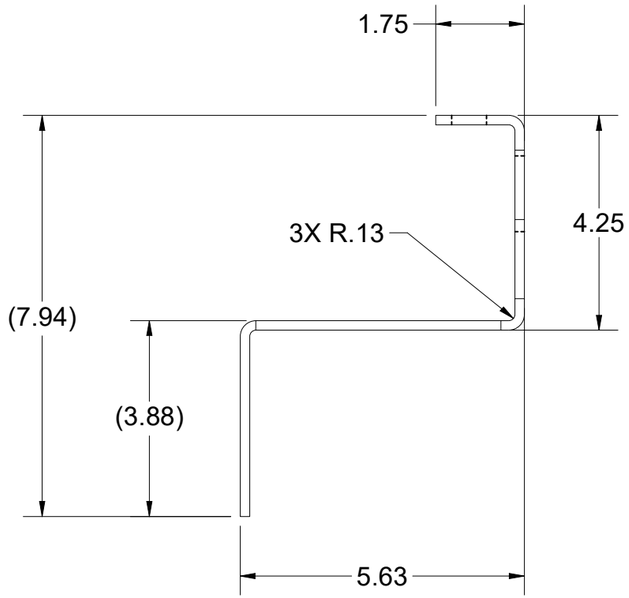

100005481.idw

BEND TABLE			
BEND RADIUS	V-OPENING	BEND ANGLE	BEND DEDUCTION
0.125	2	90	0.3750

MATERIAL IFS: 100007734

MATERIAL THK: 0.1875

MAT DESCRIPTION: STL ASTM A36 SM-HRPO 60X120 RAW .1875

Infrastructure
JENSEN
527 Dunn Circle, Sparks, NV 89431
775-352-2716 FAX: 755-358-8127
JENSENMETALTECH.COM

©2026 Jensen Infrastructure - All rights reserved.
All materials appearing as Jensen Infrastructure documents and the like are proprietary work product and are protected under U.S. copyright and other laws. Unless in conjunction with business conducted with Jensen Infrastructure , any use of Jensen Infrastructure work product without express, written consent is prohibited, and recipient is prohibited from distributing any and all work product to non-approved third parties under penalty of civil action.
This product shall only be produced in a Jensen Infrastructure facility.

NAME & DESCRIPTION: 200069193
Frame Component Steel Frame End, Adjustable

REV: G-2-1

WEIGHT: 42.902 lbmass

DRAWN BY: R. Dohr

CREATED: 10/7/2022

MODIFIED: 2/2/2026

SHEET: 16 OF 26

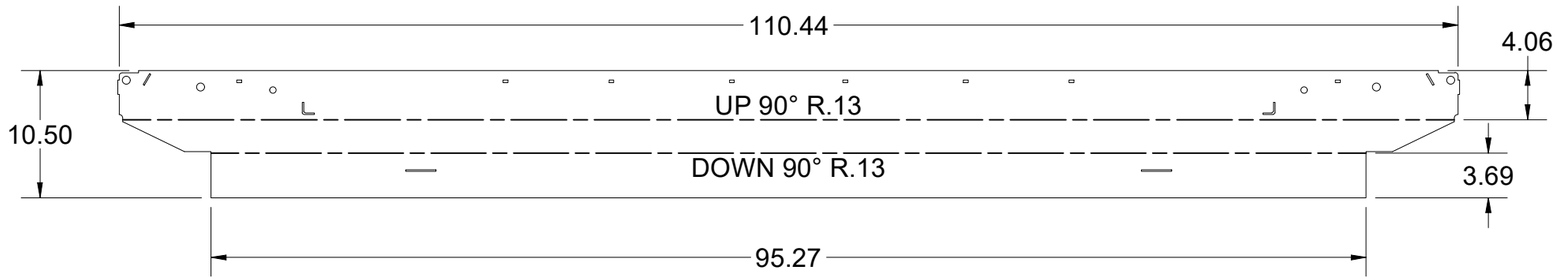

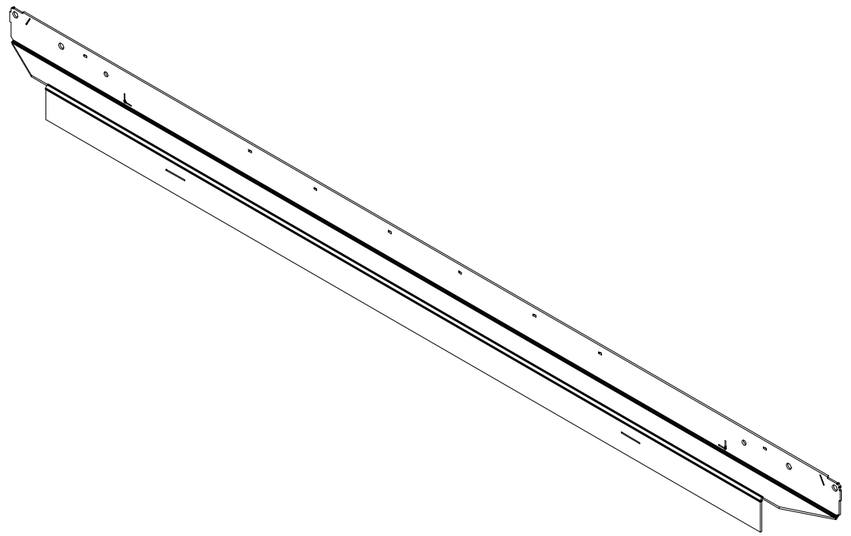

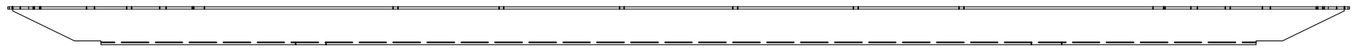

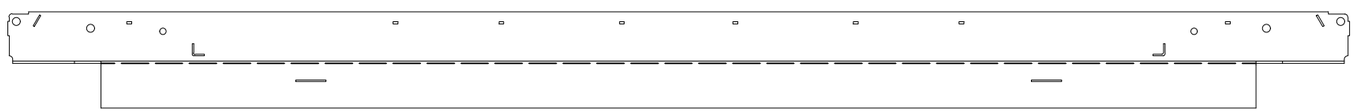

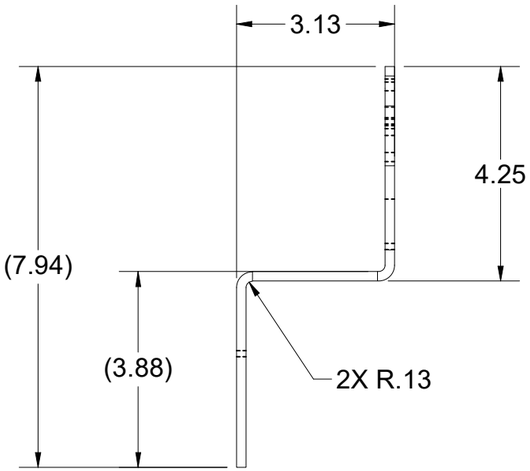

BEND TABLE				MATERIAL IFS: 100007734
BEND RADIUS	V-OPENING	BEND ANGLE	BEND DEDUCTION	MATERIAL THK: 0.1875
0.125	2	90	0.3750	MAT DESCRIPTION: STL ASTM A36 SM-HRPO 60X120 RAW .1875

Infrastructure
JENSEN
527 Dunn Circle, Sparks, NV 89431
775-352-2716 FAX: 755-358-8127
JENSENMETALTECH.COM

©2026 Jensen Infrastructure - All rights reserved.
All materials appearing as Jensen Infrastructure documents and the like are proprietary work product and are protected under U.S. copyright and other laws. Unless in conjunction with business conducted with Jensen Infrastructure , any use of Jensen Infrastructure work product without express, written consent is prohibited, and recipient is prohibited from distributing any and all work product to non-approved third parties under penalty of civil action.
This product shall only be produced in a Jensen Infrastructure facility.

NAME & DESCRIPTION: 200069211 Frame Component Steel Frame Side, Adjustable		REV: G-2-1
WEIGHT: 58.622 lbmass	DRAWN BY: R. Dohr	SHEET: 17 OF 26
CREATED: 10/7/2022	MODIFIED: 2/2/2026	

100005481.idw

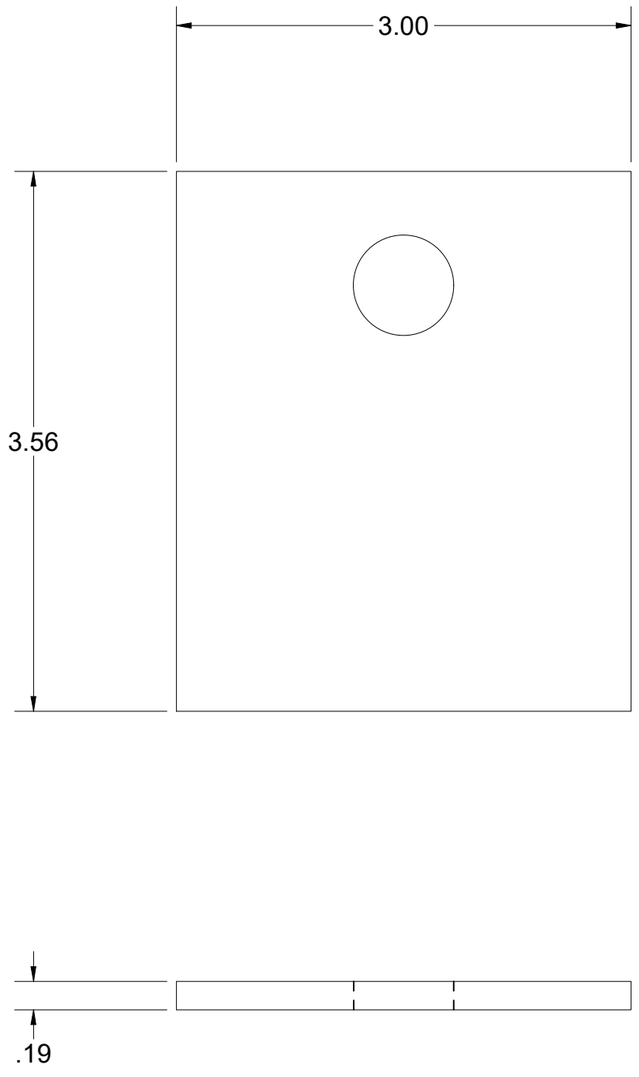

BEND TABLE				MATERIAL IFS: 100007734
BEND RADIUS	V-OPENING	BEND ANGLE	BEND DEDUCTION	MATERIAL THK: 0.1875
-	-	-	-	MAT DESCRIPTION: STL ASTM A36 SM-HRPO 60X120 RAW .1875

Infrastructure
JENSEN
527 Dunn Circle, Sparks, NV 89431
775-352-2716 FAX: 755-358-8127
JENSENMETALTECH.COM

©2026 Jensen Infrastructure - All rights reserved.
All materials appearing as Jensen Infrastructure documents and the like are proprietary work product and are protected under U.S. copyright and other laws. Unless in conjunction with business conducted with Jensen Infrastructure , any use of Jensen Infrastructure work product without express, written consent is prohibited, and recipient is prohibited from distributing any and all work product to non-approved third parties under penalty of civil action.
This product shall only be produced in a Jensen Infrastructure facility.

NAME & DESCRIPTION:	200069192 Frame Component Steel	REV:
WEIGHT: 0.550 lbmass	DRAWN BY: R. Dohr	SHEET: 18 OF 26
CREATED: 10/7/2022	MODIFIED: 2/2/2026	

100005481.idw

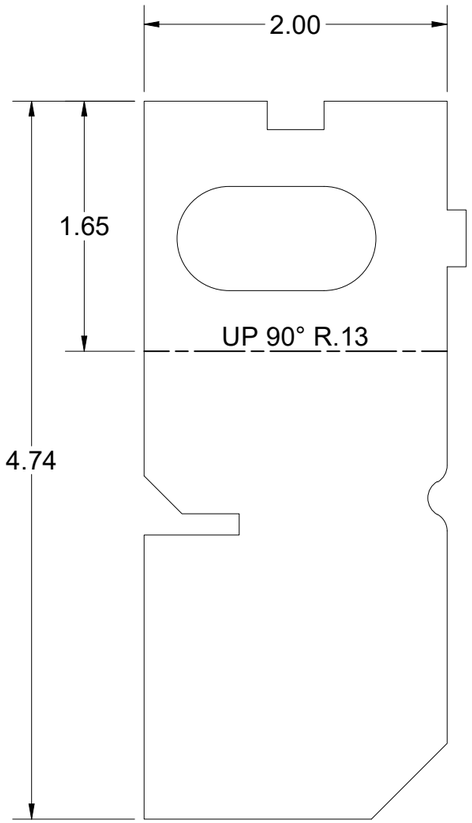

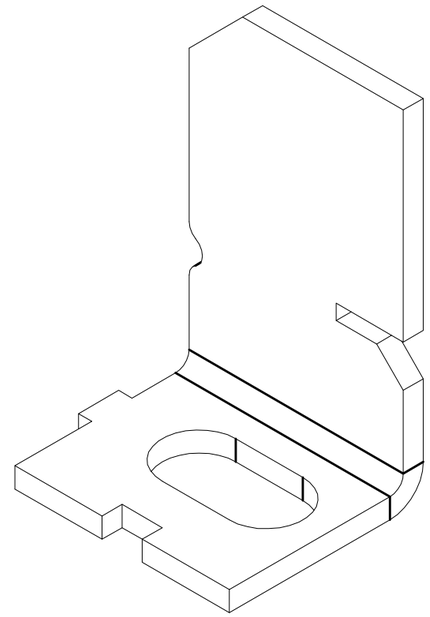

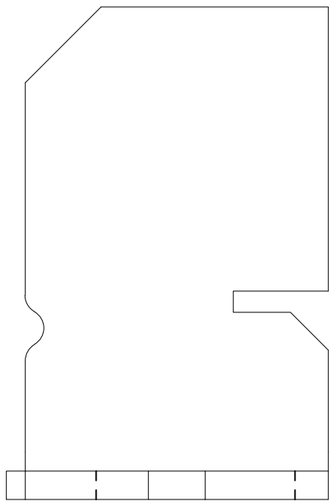

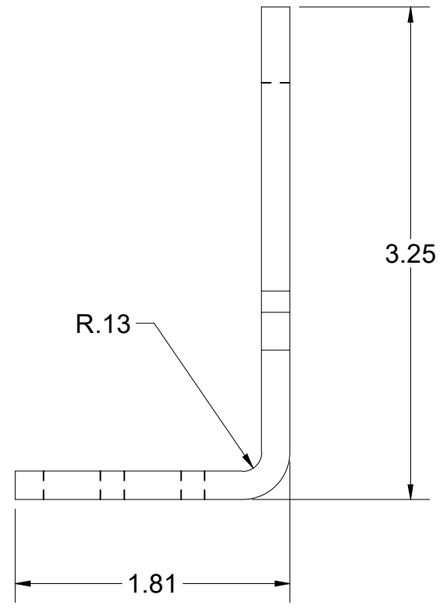

BEND TABLE				MATERIAL IFS: 100007734
BEND RADIUS	V-OPENING	BEND ANGLE	BEND DEDUCTION	MATERIAL THK: 0.1875
0.125	1	90	0.3250	MAT DESCRIPTION: STL ASTM A36 SM-HRPO 60X120 RAW .1875

Infrastructure
JENSEN
527 Dunn Circle, Sparks, NV 89431
775-352-2716 FAX: 755-358-8127
JENSENMETALTECH.COM

©2026 Jensen Infrastructure - All rights reserved.
All materials appearing as Jensen Infrastructure documents and the like are proprietary work product and are protected under U.S. copyright and other laws. Unless in conjunction with business conducted with Jensen Infrastructure , any use of Jensen Infrastructure work product without express, written consent is prohibited, and recipient is prohibited from distributing any and all work product to non-approved third parties under penalty of civil action.
This product shall only be produced in a Jensen Infrastructure facility.

NAME & DESCRIPTION: 200069159 SQUARE NUT BRACKET-CUSTOM PG&E FVT		REV: G-2-1
WEIGHT: 0.450 lbmass	DRAWN BY: R. Dohr	SHEET: 19 OF 26
CREATED: 10/7/2022	MODIFIED: 2/2/2026	

100005481.idw

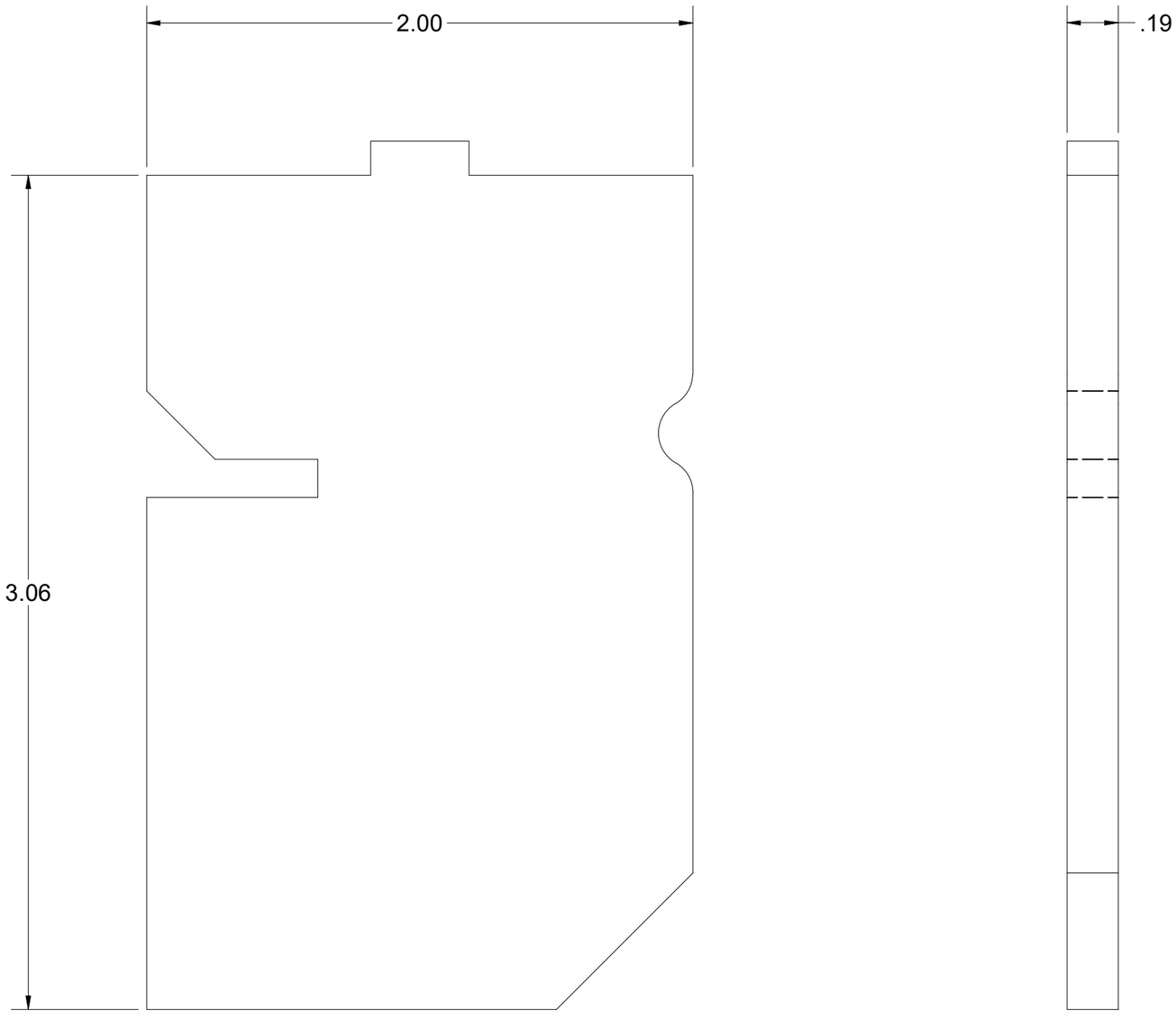

100005481.idw

BEND TABLE				MATERIAL IFS: 100007734
BEND RADIUS	V-OPENING	BEND ANGLE	BEND DEDUCTION	MATERIAL THK: 0.1875
-	-	-	-	MAT DESCRIPTION: STL ASTM A36 SM-HRPO 60X120 RAW .1875

Infrastructure
JENSEN
527 Dunn Circle, Sparks, NV 89431
775-352-2716 FAX: 755-358-8127
JENSENMETALTECH.COM

©2026 Jensen Infrastructure - All rights reserved.
All materials appearing as Jensen Infrastructure documents and the like are proprietary work product and are protected under U.S. copyright and other laws. Unless in conjunction with business conducted with Jensen Infrastructure , any use of Jensen Infrastructure work product without express, written consent is prohibited, and recipient is prohibited from distributing any and all work product to non-approved third parties under penalty of civil action.
This product shall only be produced in a Jensen Infrastructure facility.

NAME & DESCRIPTION:	200069158 STANDOFF SIDEWALL	REV:
WEIGHT: 0.313 lbmass	DRAWN BY: R. Dohr	SHEET: 20 OF 26
CREATED: 10/7/2022	MODIFIED: 2/2/2026	

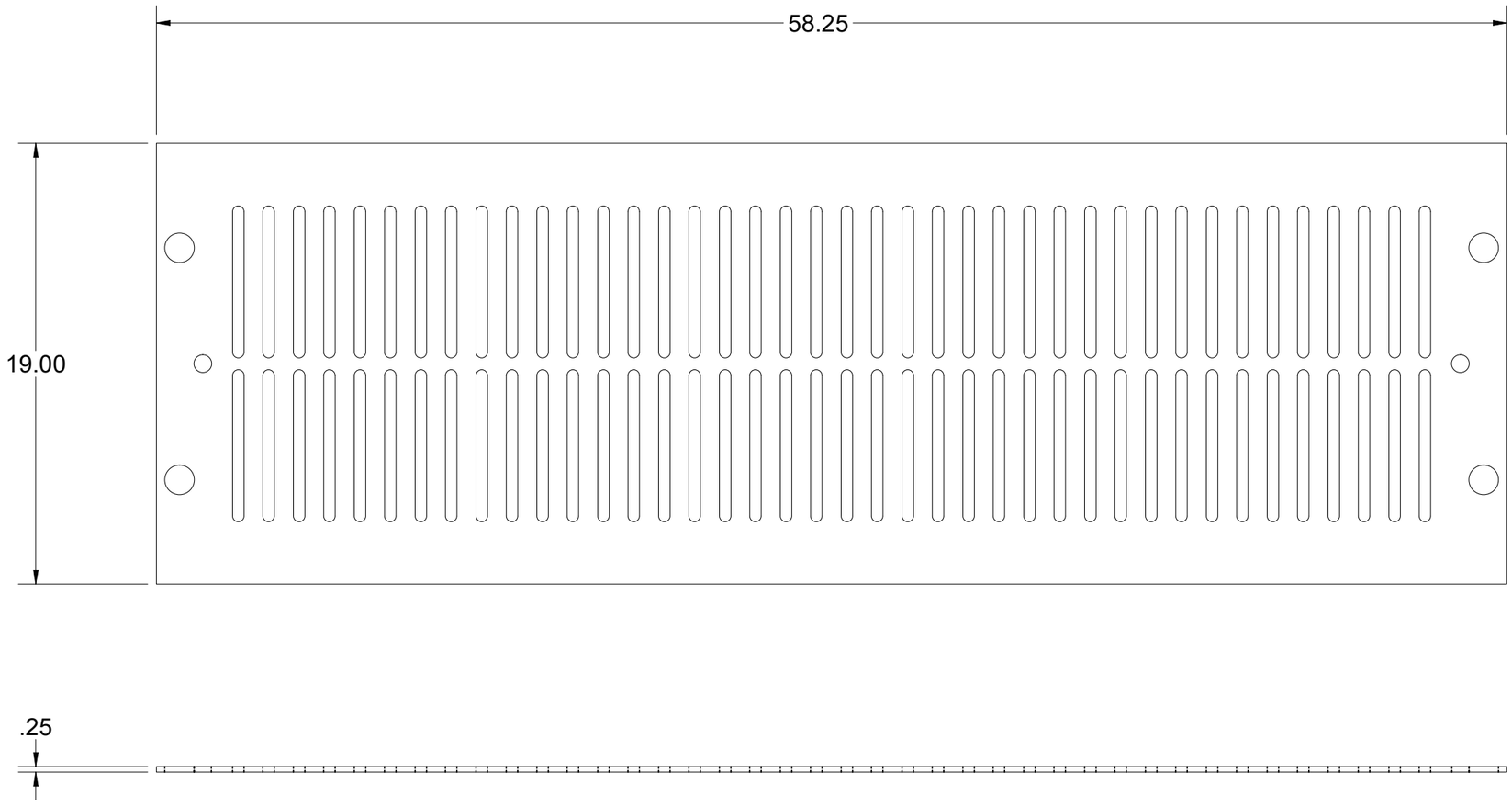

BEND TABLE			
BEND RADIUS	V-OPENING	BEND ANGLE	BEND DEDUCTION
-	-	-	-

MATERIAL IFS: 100007735

MATERIAL THK: 0.25

MAT DESCRIPTION: STL ASTM A36 SM-HRPO RAW .250

Infrastructure
JENSEN
527 Dunn Circle, Sparks, NV 89431
775-352-2716 FAX: 755-358-8127
JENSENMETALTECH.COM

©2026 Jensen Infrastructure - All rights reserved.
All materials appearing as Jensen Infrastructure documents and the like are proprietary work product and are protected under U.S. copyright and other laws. Unless in conjunction with business conducted with Jensen Infrastructure , any use of Jensen Infrastructure work product without express, written consent is prohibited, and recipient is prohibited from distributing any and all work product to non-approved third parties under penalty of civil action.
This product shall only be produced in a Jensen Infrastructure facility.

NAME & DESCRIPTION: 200069183
Door Component Steel Plate, Top

REV: G-2-1

WEIGHT: 59.818 lbmass

DRAWN BY: R. Dohr

CREATED: 10/7/2022

MODIFIED: 2/2/2026

SHEET: 21 OF 26

100005481.idw

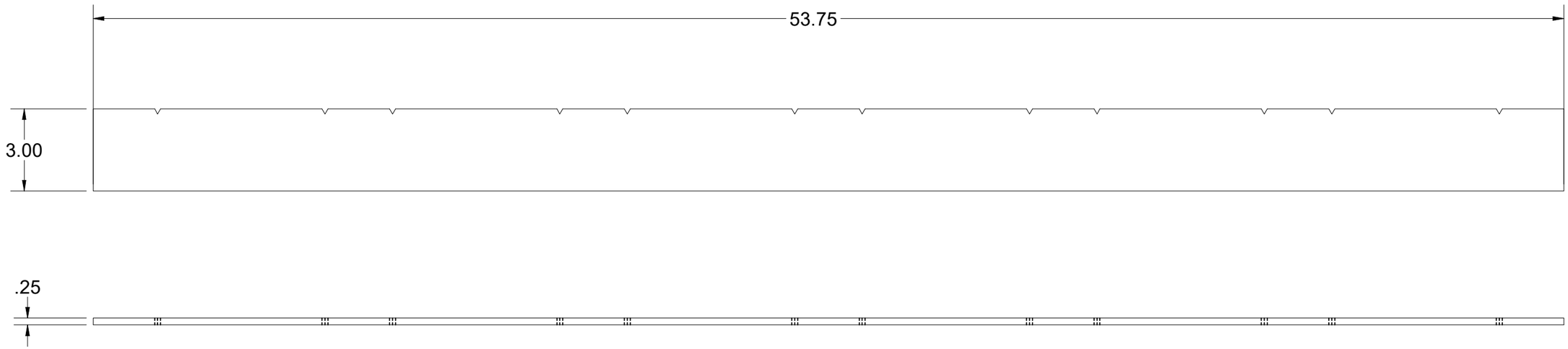

BEND TABLE				MATERIAL IFS: 100007735
BEND RADIUS	V-OPENING	BEND ANGLE	BEND DEDUCTION	MATERIAL THK: 0.25
-	-	-	-	MAT DESCRIPTION: STL ASTM A36 SM-HRPO RAW .250

Infrastructure
JENSEN
527 Dunn Circle, Sparks, NV 89431
775-352-2716 FAX: 755-358-8127
JENSENMETALTECH.COM

©2026 Jensen Infrastructure - All rights reserved.
All materials appearing as Jensen Infrastructure documents and the like are proprietary work product and are protected under U.S. copyright and other laws. Unless in conjunction with business conducted with Jensen Infrastructure , any use of Jensen Infrastructure work product without express, written consent is prohibited, and recipient is prohibited from distributing any and all work product to non-approved third parties under penalty of civil action.
This product shall only be produced in a Jensen Infrastructure facility.

NAME & DESCRIPTION: 200069182 Door Component Steel Lap Bar		REV: G-2-1
WEIGHT: 11.431 lbmass	DRAWN BY: R. Dohr	SHEET: 22 OF 26
CREATED: 10/7/2022	MODIFIED: 2/2/2026	

100005481.idw

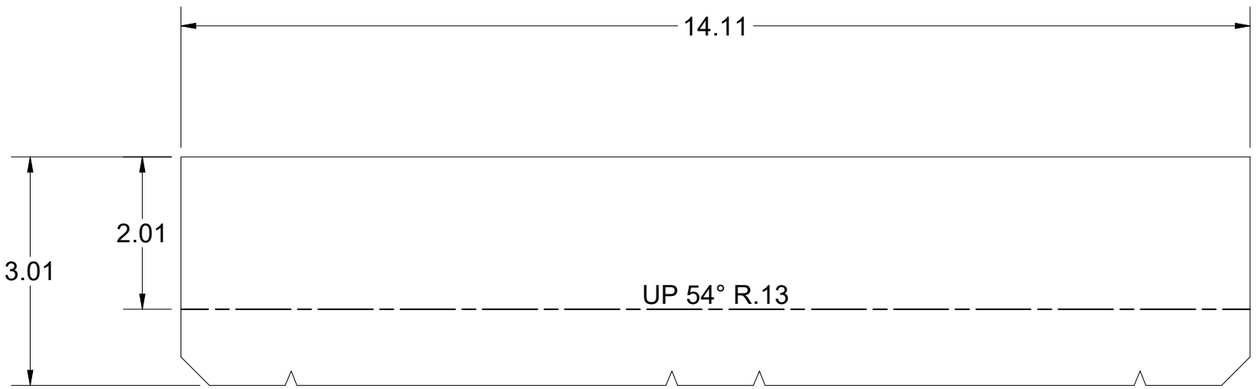

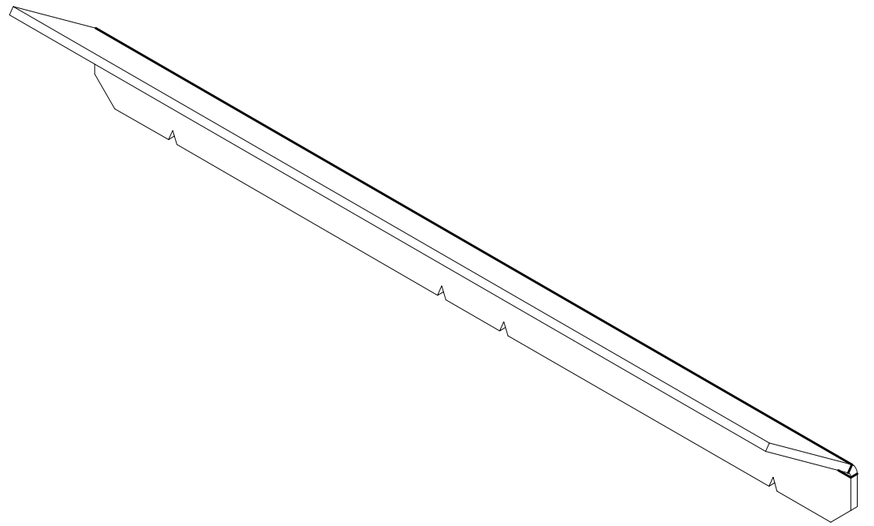

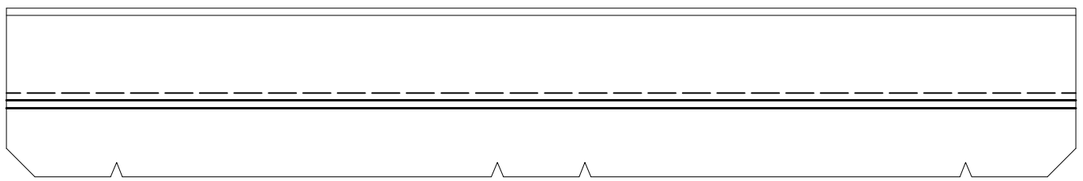

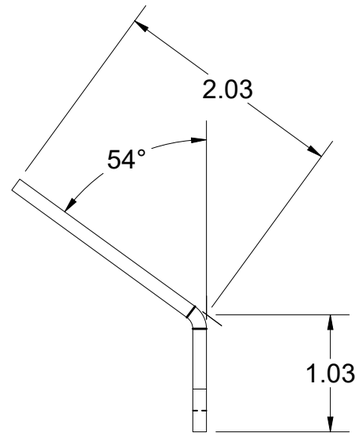

BEND TABLE				MATERIAL IFS: 100007807
BEND RADIUS	V-OPENING	BEND ANGLE	BEND DEDUCTION	MATERIAL THK: 0.1196
0.125	1	54	0.050	MAT DESCRIPTION: STL ASTM A36 GA-11 SM-HRS RAW .1196

Infrastructure
JENSEN
527 Dunn Circle, Sparks, NV 89431
775-352-2716 FAX: 755-358-8127
JENSENMETALTECH.COM

©2026 Jensen Infrastructure - All rights reserved.
All materials appearing as Jensen Infrastructure documents and the like are proprietary work product and are protected under U.S. copyright and other laws. Unless in conjunction with business conducted with Jensen Infrastructure , any use of Jensen Infrastructure work product without express, written consent is prohibited, and recipient is prohibited from distributing any and all work product to non-approved third parties under penalty of civil action.
This product shall only be produced in a Jensen Infrastructure facility.

NAME & DESCRIPTION: 200069195 Door Component Steel Stiffener, Plate		REV: G-2-1
WEIGHT: 1.422 lbmass	DRAWN BY: R. Dohr	SHEET: 23 OF 26
CREATED: 10/7/2022	MODIFIED: 2/2/2026	

100005481.idw

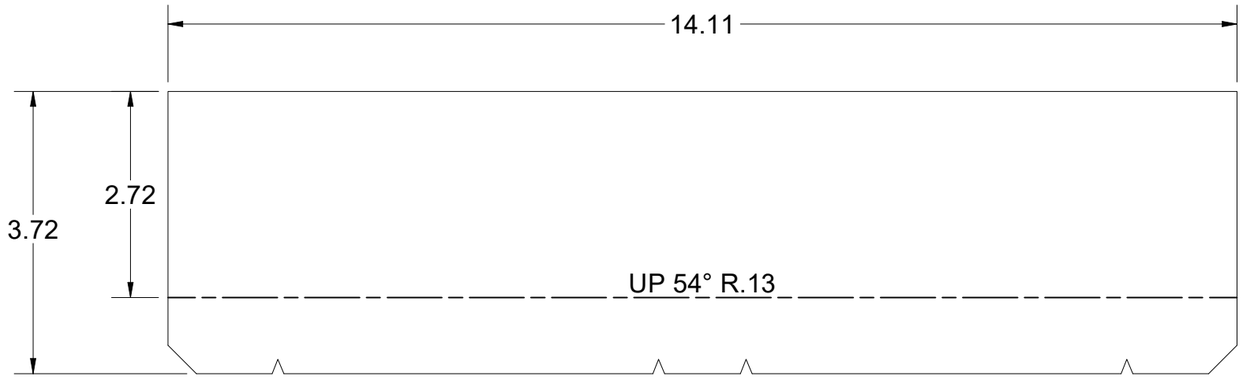

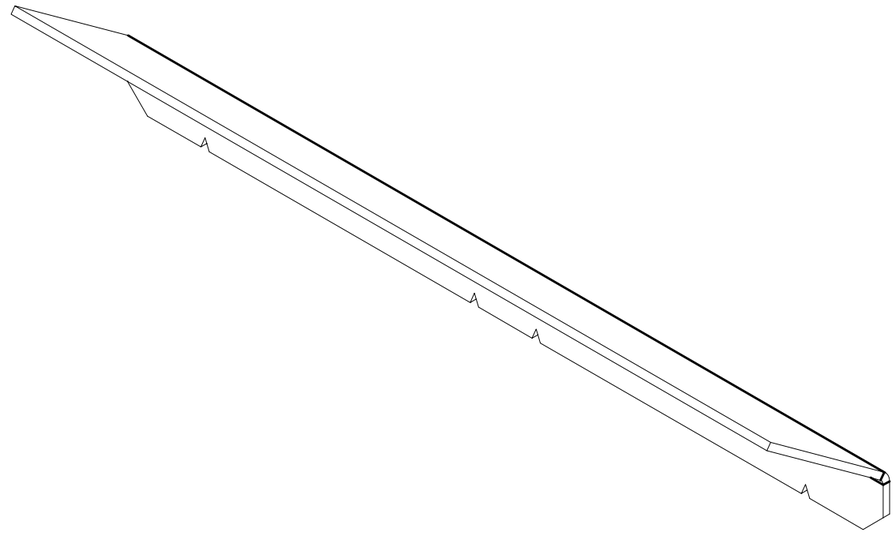

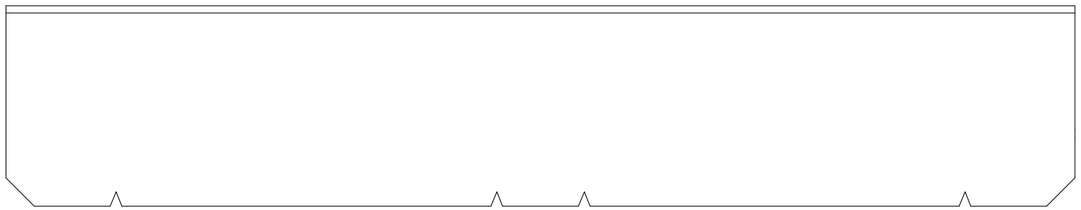

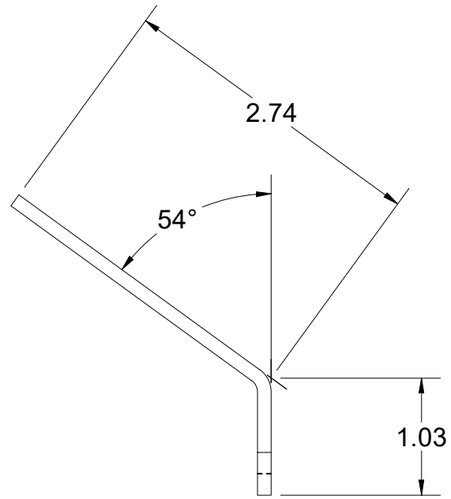

BEND TABLE				MATERIAL IFS: 100007807
BEND RADIUS	V-OPENING	BEND ANGLE	BEND DEDUCTION	MATERIAL THK: 0.1196
0.125	1	54	0.050	MAT DESCRIPTION: STL ASTM A36 GA-11 SM-HRS RAW .1196

Infrastructure
JENSEN
527 Dunn Circle, Sparks, NV 89431
775-352-2716 FAX: 755-358-8127
JENSENMETALTECH.COM

©2026 Jensen Infrastructure - All rights reserved.
All materials appearing as Jensen Infrastructure documents and the like are proprietary work product and are protected under U.S. copyright and other laws. Unless in conjunction with business conducted with Jensen Infrastructure , any use of Jensen Infrastructure work product without express, written consent is prohibited, and recipient is prohibited from distributing any and all work product to non-approved third parties under penalty of civil action.
This product shall only be produced in a Jensen Infrastructure facility.

NAME & DESCRIPTION: 200069196 Door Component Steel Stiffener, Bar		REV: G-2-1
WEIGHT: 1.764 lbmass	DRAWN BY: R. Dohr	SHEET: 24 OF 26
CREATED: 10/7/2022	MODIFIED: 2/2/2026	

100005481.idw

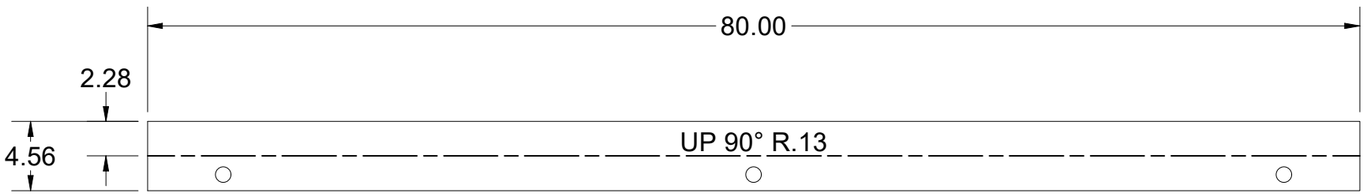

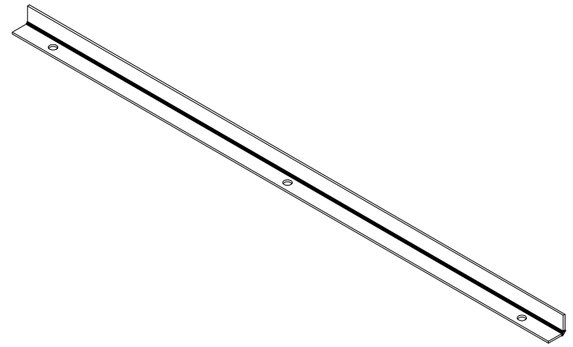

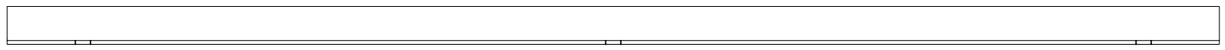

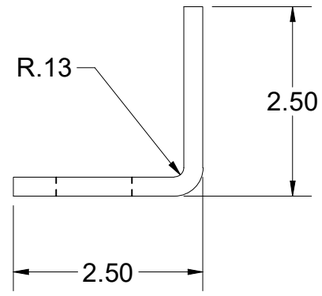

BEND TABLE			
BEND RADIUS	V-OPENING	BEND ANGLE	BEND DEDUCTION
0.125	2	90	0.440

MATERIAL IFS: 100007735

MATERIAL THK: 0.25

MAT DESCRIPTION: STL ASTM A36 SM-HRPO RAW .250

Infrastructure
JENSEN
527 Dunn Circle, Sparks, NV 89431
775-352-2716 FAX: 755-358-8127
JENSENMETALTECH.COM

©2026 Jensen Infrastructure - All rights reserved.
All materials appearing as Jensen Infrastructure documents and the like are proprietary work product and are protected under U.S. copyright and other laws. Unless in conjunction with business conducted with Jensen Infrastructure , any use of Jensen Infrastructure work product without express, written consent is prohibited, and recipient is prohibited from distributing any and all work product to non-approved third parties under penalty of civil action.
This product shall only be produced in a Jensen Infrastructure facility.

NAME & DESCRIPTION: 200069902
Frame Component Leveling Angle

REV: G-2-1

WEIGHT: 26.203 lbmass

DRAWN BY: R. Dohr

CREATED: 10/7/2022

MODIFIED: 2/2/2026

SHEET: 25 OF 26

100005481.idw

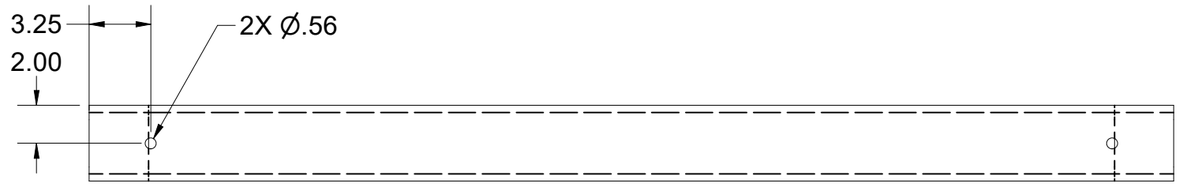

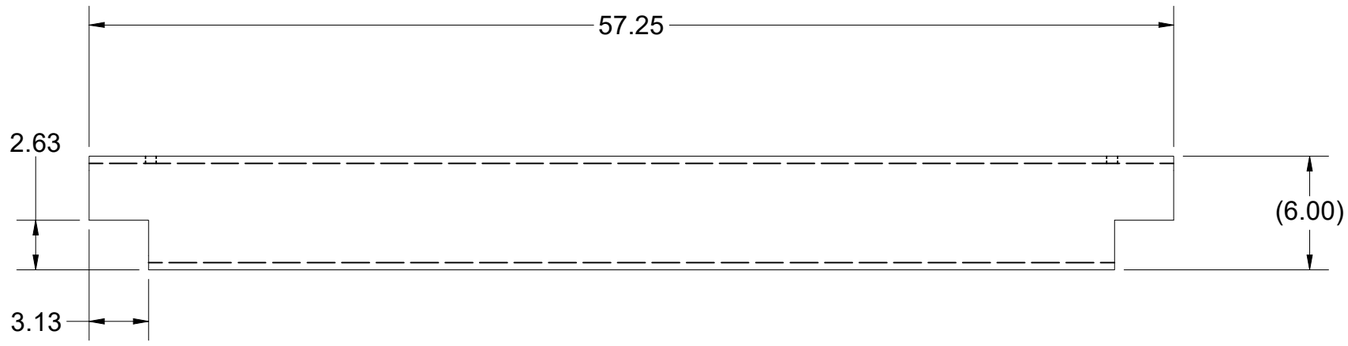

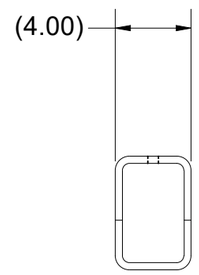

BEND TABLE				MATERIAL IFS: 100005167
BEND RADIUS	V-OPENING	BEND ANGLE	BEND DEDUCTION	MATERIAL THK: 3/8
				MAT DESCRIPTION: STRUCTURAL STEEL RECTANGULAR TUBE - 6 x 4 x 3/8

Infrastructure
JENSEN
527 Dunn Circle, Sparks, NV 89431
775-352-2716 FAX: 755-358-8127
JENSENMETALTECH.COM

©2026 Jensen Infrastructure - All rights reserved.
All materials appearing as Jensen Infrastructure documents and the like are proprietary work product and are protected under U.S. copyright and other laws. Unless in conjunction with business conducted with Jensen Infrastructure , any use of Jensen Infrastructure work product without express, written consent is prohibited, and recipient is prohibited from distributing any and all work product to non-approved third parties under penalty of civil action.
This product shall only be produced in a Jensen Infrastructure facility.

NAME & DESCRIPTION: 200068704 STRUCTURAL STEEL RECTANGULAR TUBE - 6 x 4 x 3/8		REV: G-2-1
WEIGHT: 101.376 lbmass	DRAWN BY: R. Dohr	SHEET: 26 OF 26
CREATED: 10/7/2022	MODIFIED: 2/2/2026	

100005481.idw