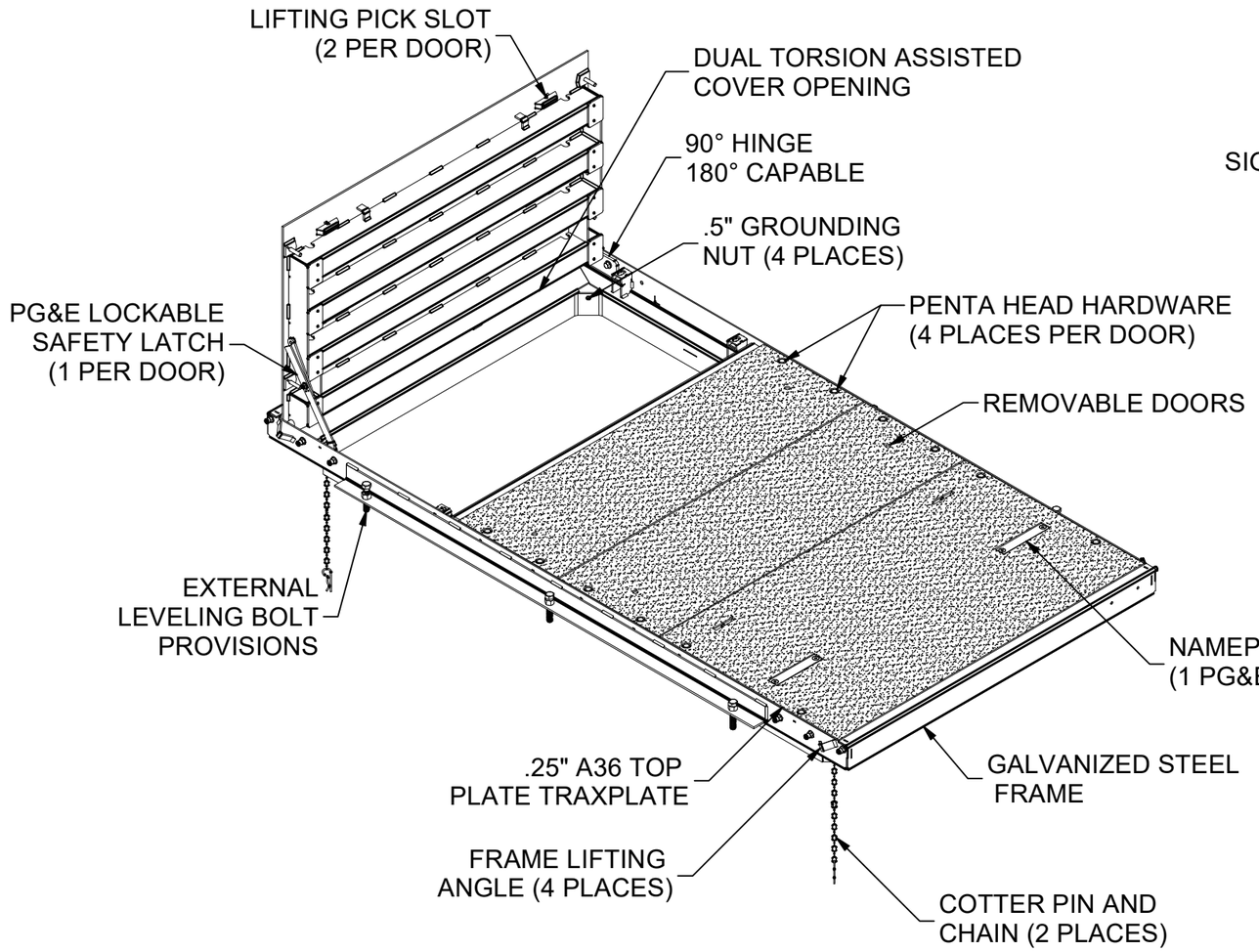

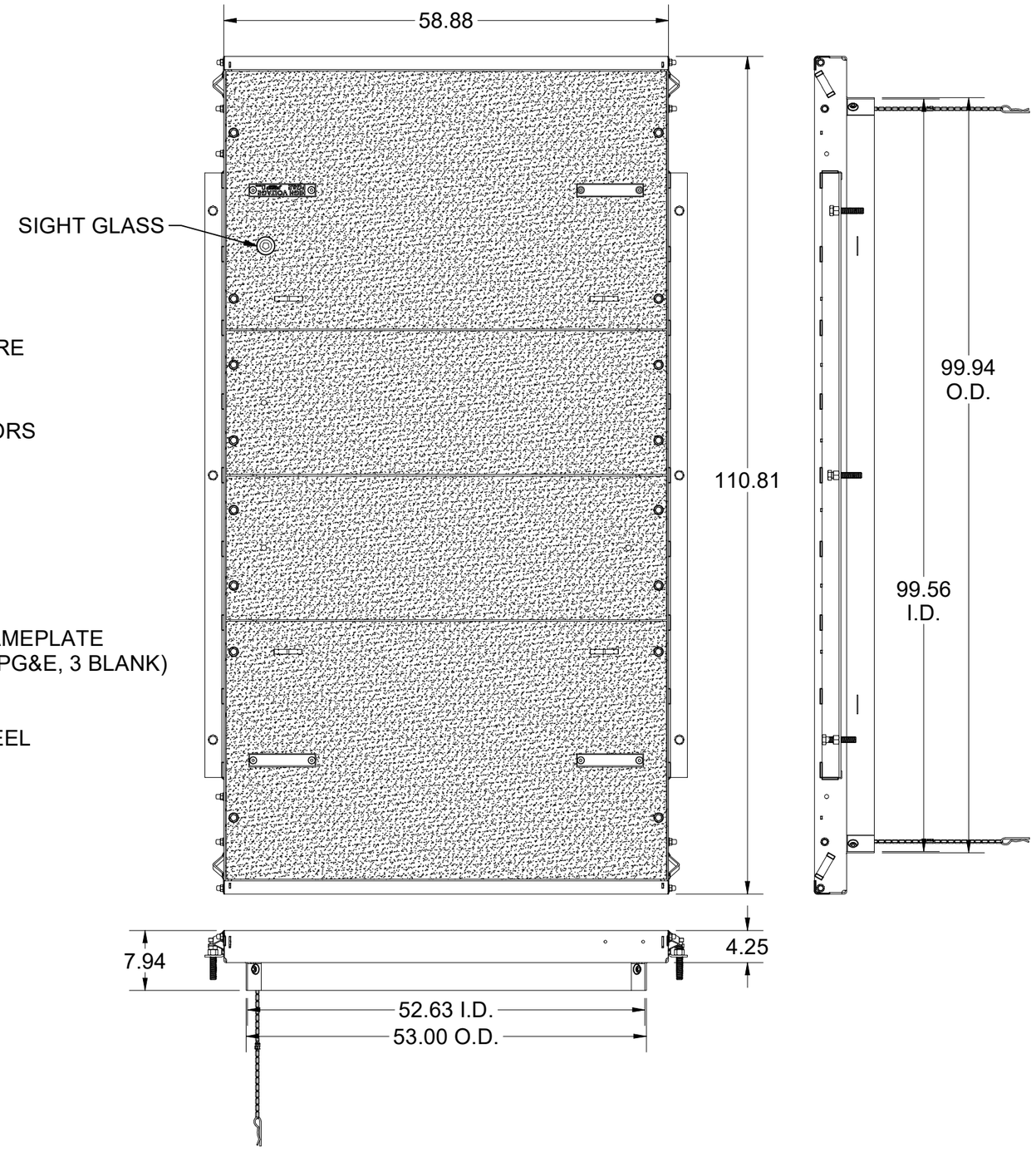

100005480.idw

LOADING CRITERIA: PG&E FVT

SURFACE:	TraxPlate™	FINISH:	Galvanized
WEIGHT:	1510.17 lbs	MARKING:	

Infrastructure
JENSEN
527 Dunn Circle, Sparks, NV 89431
775-352-2716 FAX: 755-358-8127
JENSENMETALTECH.COM

©2026 Jensen Infrastructure - All rights reserved.
All materials appearing as Jensen Infrastructure documents and the like are proprietary work product and are protected under U.S. copyright and other laws. Unless in conjunction with business conducted with Jensen Infrastructure , any use of Jensen Infrastructure work product without express, written consent is prohibited, and recipient is prohibited from distributing any and all work product to non-approved third parties under penalty of civil action.
This product shall only be produced in a Jensen Infrastructure facility.

DESCRIPTION: CAS2-54102-AH-TRX-G-SG-GR-PG&E-OH08-SPLICE FVT

54x102 Cover Assembly (ASTM Load N/A, 2 Door, Steel, Hinged, TraxPlate™, Galvanized , Sight Glass Grounding, PG&E) OH 08 SPLICE FVT

PART NUMBER:	100005480	DRAWN BY:	R. Dohr
CREATED:	9/20/2022	MODIFIED:	2/3/2026

REV: D-3-2

SHEET: 1

BILL OF MATERIALS

ITEM	ITEM QTY	QTY	PART NUMBER	DESCRIPTION	PART NAME
1	1	1	200068621	DAS2-T-54102-H-TRX-G-CL-SG-PG&E-SPLICE FVT	200068621
2	1	1	200068615	DAS2-T-54102-H-TRX-G-BD-PG&E-SPLICE	200068615
3	1	1	200068623	FAS-54102-AH-G-SG-PG&E-OH08-SPLICE FVT	200068623
4	2	2	200068644	DAS1-T-54102-D-TRX-G-BD-PG&E-SPLICE FVT	200068644
5	2	2	200068660	PG&E FVT SAFETY LATCH	200068660
6	3	3	200076144	Support Beam 57.25in W Beam 54102 PG&E FVT	200076144
7	10	10	100026256	LOW-STRENGTH STEEL FLANGE NUT, 1/2" - 13 THREAD SIZE	100026256
8	26	26	100011418	WASHER FLAT 1/2 NARROW ZINC	100011418
9	10	10	100007939	CAP VINYL .467 X 1/2	100007939
10	1	1	100007928	SIGHT GLASS	100007928
11	16	16	100007925	PAD INSULATING POLYURETHANE LARGE 4.00 X 2.75	100007925
12	2	2	100007896	TORSION HEX ROD 9/16 X 36 RAW	100007896
13	32	32	100007882	Rivet Blind Grip .1875" Large Domed Head Range-0.376-0.5" Steel	100007882
14	8	8	100007873	BOLT SHCS 3/8-16 X 1-1/4 PLATED	100007873
15	4	4	100007869	BOLT SHCS 1/2-13 X 1-3/4 SS	100007869
16	8	8	100007859	RIVET NUT 3/8-16 FLAT KNURLED	100007859
17	8	8	100007733	Bolt Socket Flat Countersunk Head - 1/2-13 UNC - Grade 5 - Zinc - FT - 1"	100007733
18	2	2	100007726	TORSION HEX ROD 7/16 X 36 RAW	100007726
19	3	3	100007562	NAME PLATE PLEXI PG&E	100007562
20	2	2	100007492	HEX NUT NYLOCK - 1/2-13 UNC - GR5 - ZINC	100007492
21	1	1	100005058	NAME PLATE CAST ALUM PG&E - HIGH VOLTAGE	100005058
22	6	6	100003823	Hex Bolt 1/2-13 UNC ZINC - PT - 1.5"	100003823
23	6	6	100003782	HEX COIL BOLT 3/4 X 4 PLAIN	100003782
24	2	2	100003484	Hex Bolt 1/2-13 UNC ZINC - FT - 0.75"	100003484
26	16	16	200072509	Square Strut Channel Nut, 1/2"-13 Thread Size	200072509
27	2	2	200069493	HINGE ASSY PG&E FVT LEFT .5625	200069493
28	2	2	200069179	HINGE ASSY PG&E FVT RIGHT .4375	200069179
29	2	2	100041563	16" CHAIN SAFETY W/WASHER	100041563
30	2	2	100007682	OFFSET SPRING MOUNT .562	100007682
31	2	2	100007670	SPRING MOUNT ASSY .438	100007670
32	16	16	100007749	BOLT PENTA 1/2-13 UNC 0.875 HEAD 2.25L SS DRILLED	100007749
33	3	3	200076144	Support Beam 57.25in W Beam 54102 PG&E FVT	200076144

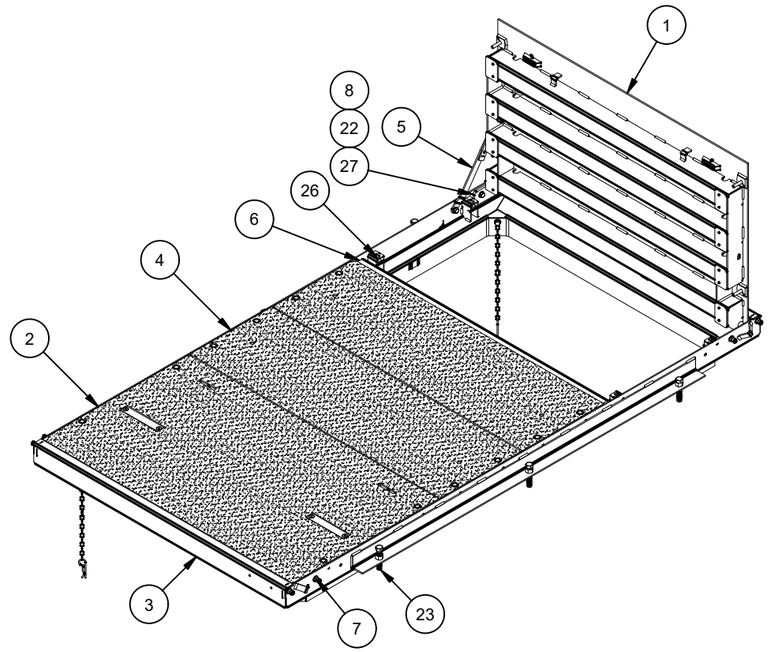

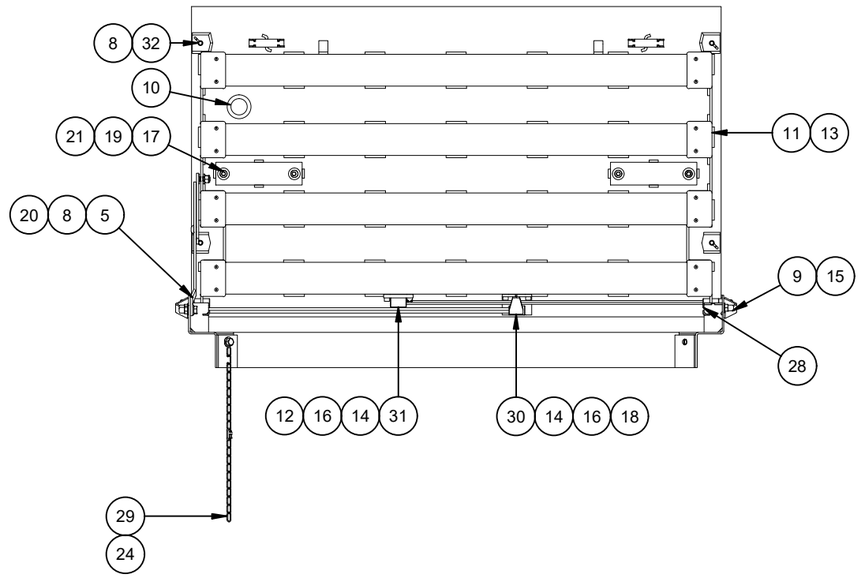

REVISION HISTORY		
REV	DESCRIPTION	DATE
A-1	ERM-52908 INITIAL DESIGN	9/24/2022
B-1	REPLACED TORSION AND HINGE RECIEVERS	10/18/2022
C-1	CHANGED FROM SPRING NUT TO SQUARE NUT BOLT TOWER CONFIGURATION	3/22/2023
D-3	UPDATED NOTES AND WELD CALLOUTS PER PG&E COMMENTS DURING TRANSFORMER TESTING; CHANGED TO 2.25" COVER BOLTS; ADDED VISUAL WELDS FOR MFG PRECISION; CORRECTED TORSION ASSIST	6/29/2023
D-3	ADDED GALV DRAIN NOTCHES TO STIFFENERS, UPDATED WASHERS	10/13/2025
D-3-2	SWAPPED J CONE BASES TO CAM TOWER BASES	2/3/2026

MATERIAL FINISH: Galvanized

MATERIAL SURFACE: TraxPlate™

Infrastructure JENSEN

527 Dunn Circle, Sparks, NV 89431
775-352-2716 FAX: 755-358-8127
JENSENMETALTECH.COM

©2026 Jensen Infrastructure - All rights reserved.
All materials appearing as Jensen Infrastructure documents and the like are proprietary work product and are protected under U.S. copyright and other laws. Unless in conjunction with business conducted with Jensen Infrastructure , any use of Jensen Infrastructure work product without express, written consent is prohibited, and recipient is prohibited from distributing any and all work product to non-approved third parties under penalty of civil action.
This product shall only be produced in a Jensen Infrastructure facility.

PART NUMBER & DESCRIPTION:	100005480 CAS2-54102-AH-TRX-G-SG-GR-PG&E-OH08-SPLICE FVT		REV: D-3-2
WEIGHT:	1510.17 Lbs	DRAWN BY: R. Dohr	SHEET: 2
CREATED:	9/20/2022	MODIFIED: 2/3/2026	

100005480.idw

BILL OF MATERIALS

ITEM	ITEM QTY	QTY	PART NUMBER	DESCRIPTION	PART NAME
1	1	137.868 lbmass	100007735	Door Component Steel Plate, Bottom Nameplate	200068622
2	2	2.425 lbmass	100007735	Door Component Steel Side Bar with Pivot	200068619
3	4	118.472 lbmass	100007734	Door Component Steel Channel	200068616
4	2	9.491 lbmass	100007735	Door Component Steel Side Bar	200074065
5	2	2.089 lbmass	100007735	Door Component Steel Offset Side Bar	200074066
6	4	4	100007675	CAM BASE	100007675
7	1	1	100041280	SIGHT GLASS BUSHING STL	100041280
8	2	3.276 lbmass	100007735	PG&E NAME PLATE BACKING PLATE	100021175
9	2	2	100007916	CLIP PICK HOLE 304SS	100007916
10	4	4	100007728	NUT SELF-CLINCH 1/2-13 S-0813-1 RAW	100007728
11	2	2	100007697	LIFT COVER STL	100007697
12	2	2	100007647	LIFTING BRACKET STEEL LEAF	100007647

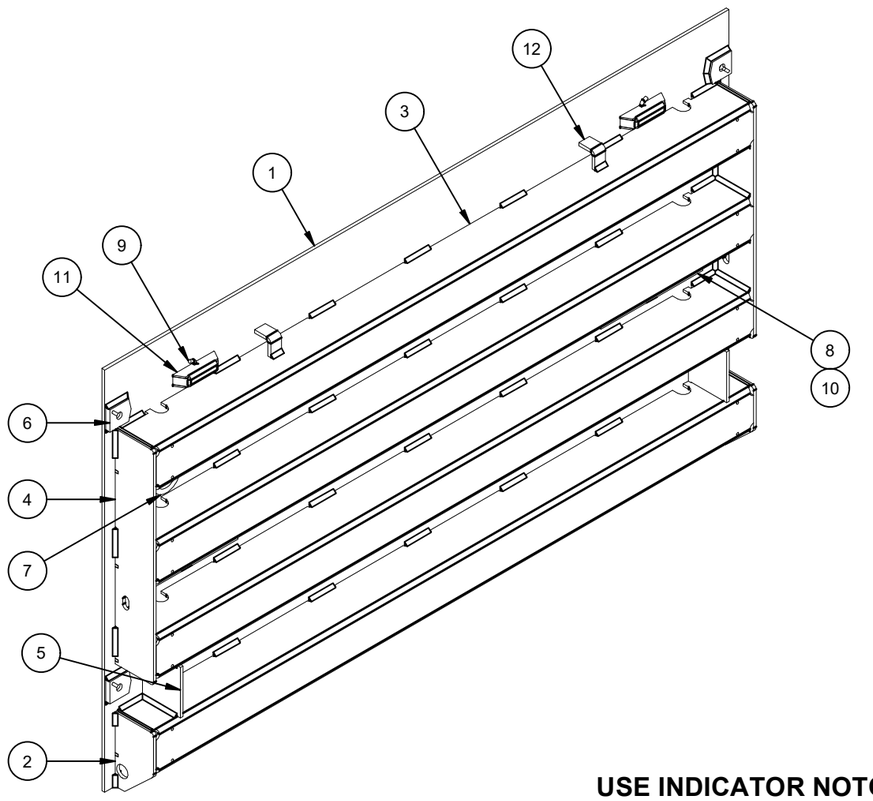

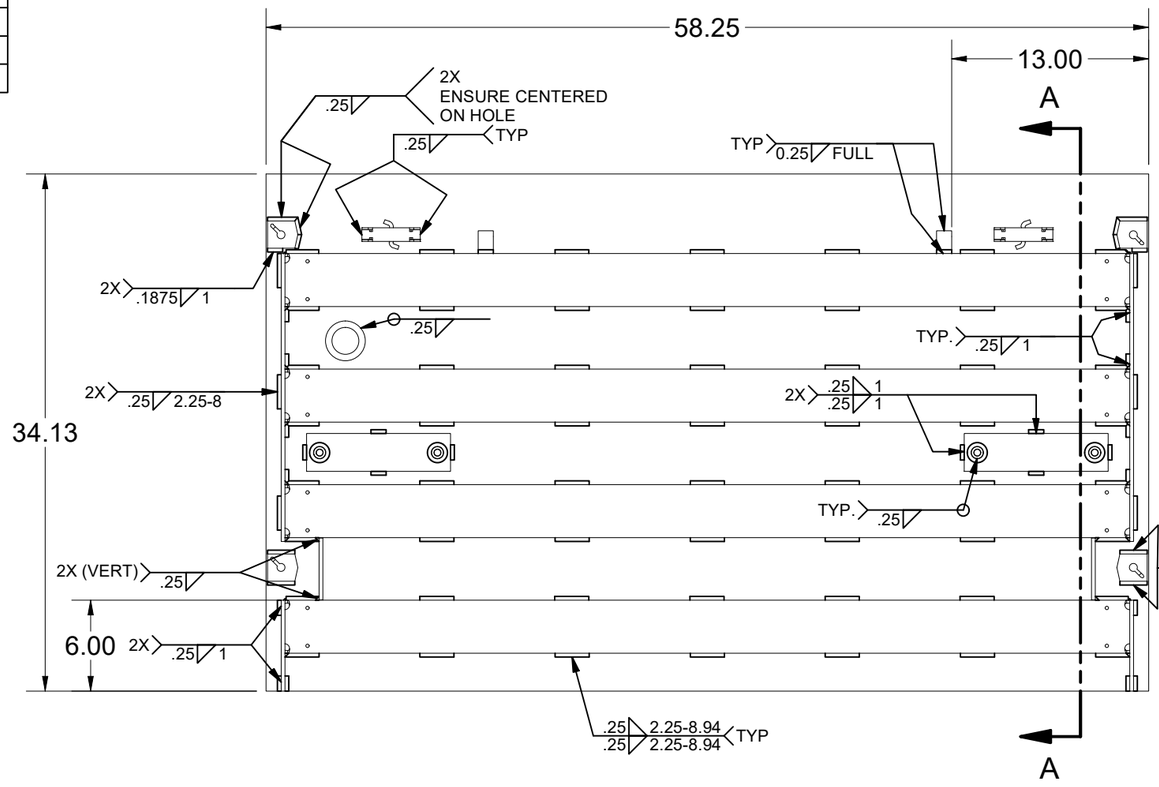

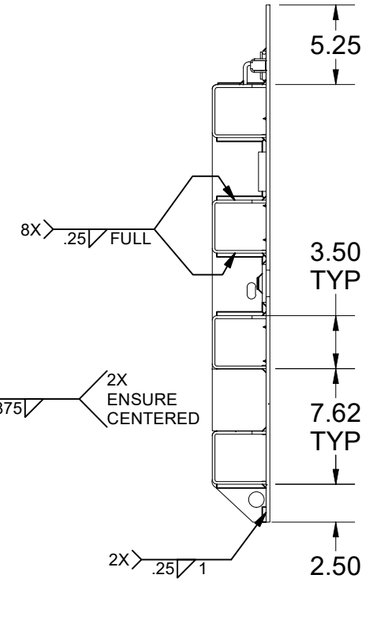

SECTION A-A

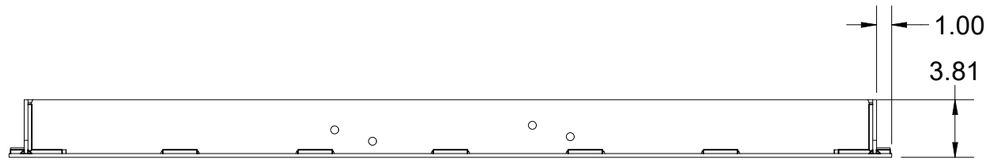

USE INDICATOR NOTCHES FOR HOLDING WELD PATTERNS

MATERIAL FINISH: Galvanized	Infrastructure JENSEN 527 Dunn Circle, Sparks, NV 89431 775-352-2716 FAX: 755-358-8127 *JENSENMETALTECH.COM*	©2026 Jensen Infrastructure - All rights reserved. All materials appearing as Jensen Infrastructure documents and the like are proprietary work product and are protected under U.S. copyright and other laws. Unless in conjunction with business conducted with Jensen Infrastructure , any use of Jensen Infrastructure work product without express, written consent is prohibited, and recipient is prohibited from distributing any and all work product to non-approved third parties under penalty of civil action. This product shall only be produced in a Jensen Infrastructure facility.	PART NUMBER & DESCRIPTION: 200068621 DAS2-T-54102-H-TRX-G-CL-SG-PG&E-SPLICE FVT	REV: D-3-2
MATERIAL SURFACE: TraxPlate™			WEIGHT: 278.58 Lbs CREATED: 9/20/2022	DRAWN BY: R. Dohr MODIFIED: 2/3/2026	SHEET: 3

100005480.idw

BILL OF MATERIALS

ITEM	ITEM QTY	QTY	PART NUMBER	DESCRIPTION	PART NAME
1	4	118.472 lbmass	100007734	Door Component Steel Channel	200068616
2	1	138.201 lbmass	100007735	Door Component Steel Plate, Top Nameplate	200068618
3	2	2.425 lbmass	100007735	Door Component Steel Side Bar with Pivot	200068619
4	2	9.491 lbmass	100007735	Door Component Steel Side Bar	200074065
5	2	2.089 lbmass	100007735	Door Component Steel Offset Side Bar	200074066
6	2	2	100007916	CLIP PICK HOLE 304SS	100007916
7	4	4	100007728	NUT SELF-CLINCH 1/2-13 S-0813-1 RAW	100007728
8	2	2	100007697	LIFT COVER STL	100007697
9	2	2	100007647	LIFTING BRACKET STEEL LEAF	100007647
10	2	3.276 lbmass	100007735	PG&E NAME PLATE BACKING PLATE	100021175
11	4	4	100007675	CAM BASE	100007675

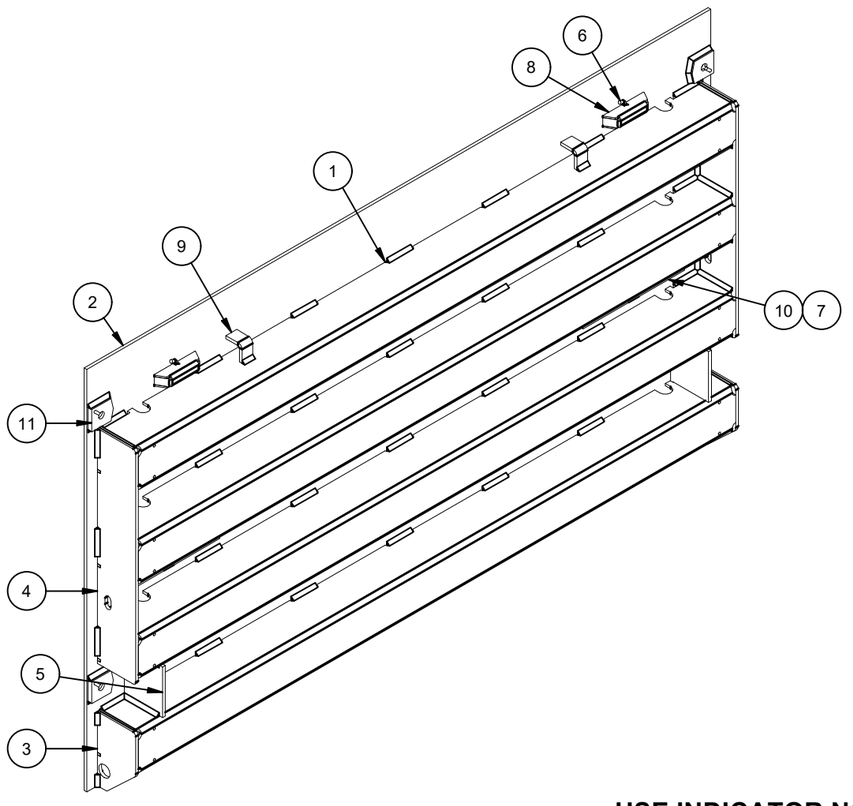

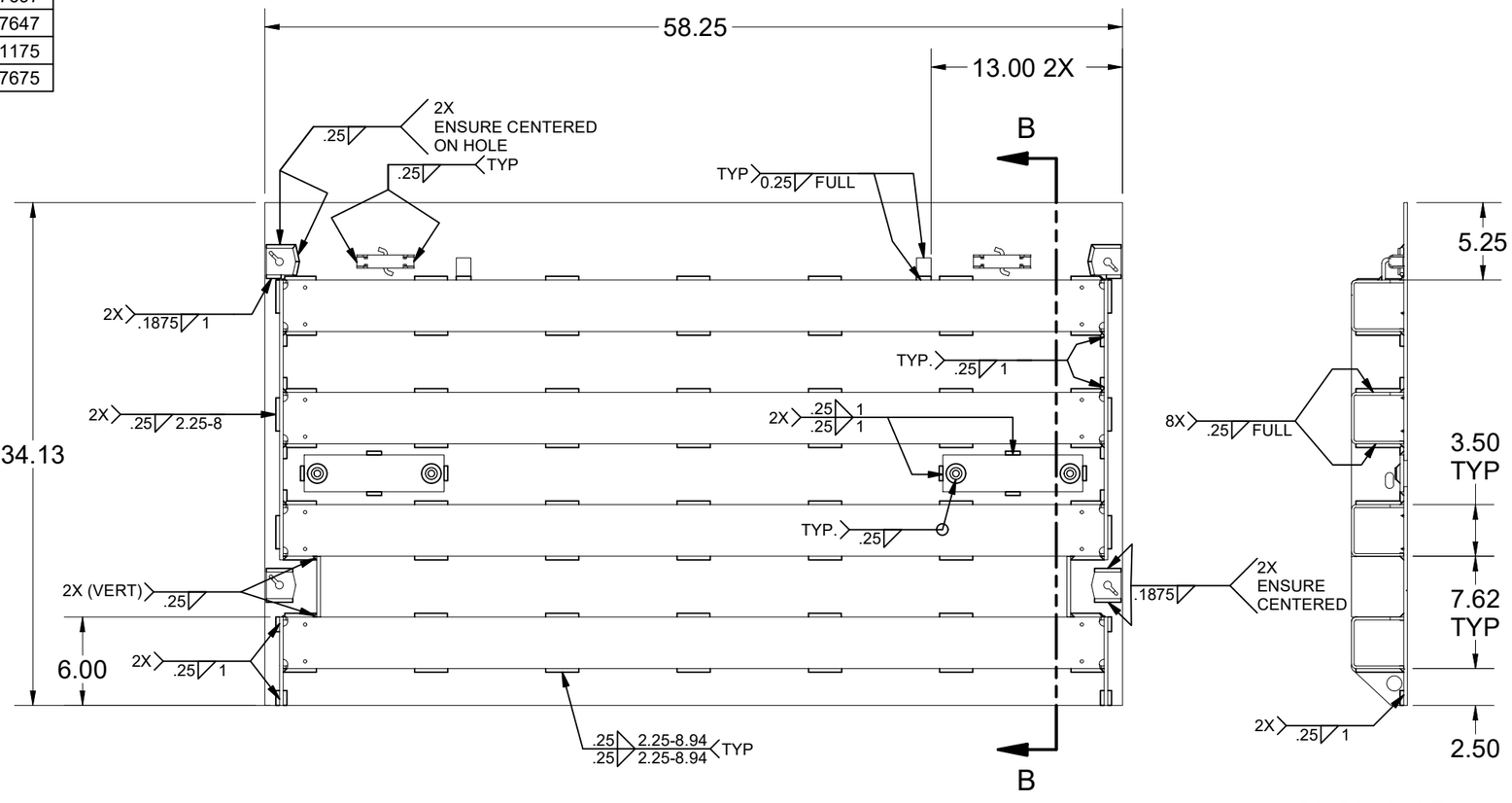

SECTION B-B

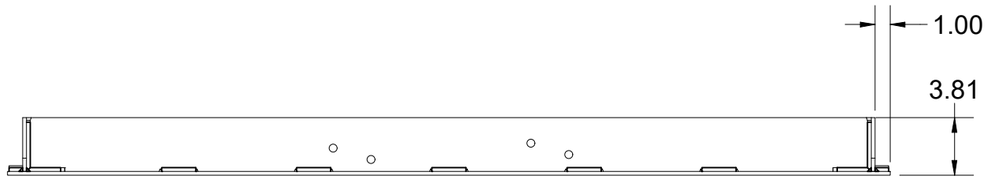

USE INDICATOR NOTCHES FOR HOLDING WELD PATTERNS

MATERIAL FINISH: Galvanized	Infrastructure JENSEN	©2026 Jensen Infrastructure - All rights reserved. All materials appearing as Jensen Infrastructure documents and the like are proprietary work product and are protected under U.S. copyright and other laws. Unless in conjunction with business conducted with Jensen Infrastructure , any use of Jensen Infrastructure work product without express, written consent is prohibited, and recipient is prohibited from distributing any and all work product to non-approved third parties under penalty of civil action. This product shall only be produced in a Jensen Infrastructure facility.	PART NUMBER & DESCRIPTION: 200068615 DAS2-T-54102-H-TRX-G-BD-PG&E-SPLICE	REV: D-3-2
MATERIAL SURFACE: TraxPlate™	527 Dunn Circle, Sparks, NV 89431 775-352-2716 FAX: 755-358-8127 *JENSENMETALTECH.COM*		WEIGHT: 278.44 Lbs / DRAWN BY: R. Dohr	SHEET: 4
			CREATED: 9/20/2022 / MODIFIED: 2/3/2026	

100005480.idw

BILL OF MATERIALS

ITEM	ITEM QTY	QTY	PART NUMBER	DESCRIPTION	PART NAME
1	1	78.151 lbmass	100007735	Door Component Steel Plate, Top	200068641
2	2	2	200018206	PICK HOLE ANGLE	200018206
3	2	22.753 lbmass	100007735	Door Component Steel Lap Bar	200068642
4	10	23.217 lbmass	100007735	Door Component Steel Stiffener, Bar	200068643
5	4	4	100007675	CAM BASE	100007675

USE INDICATOR NOTCHES FOR HOLDING WELD PATTERNS

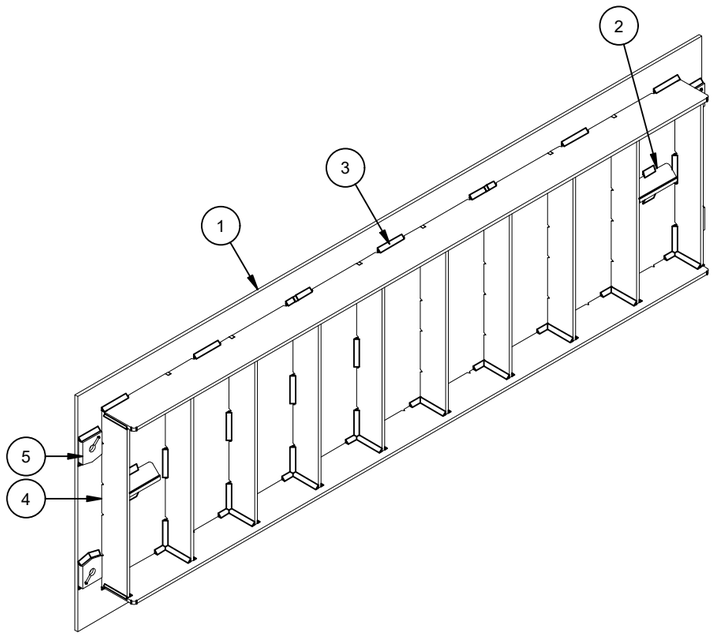

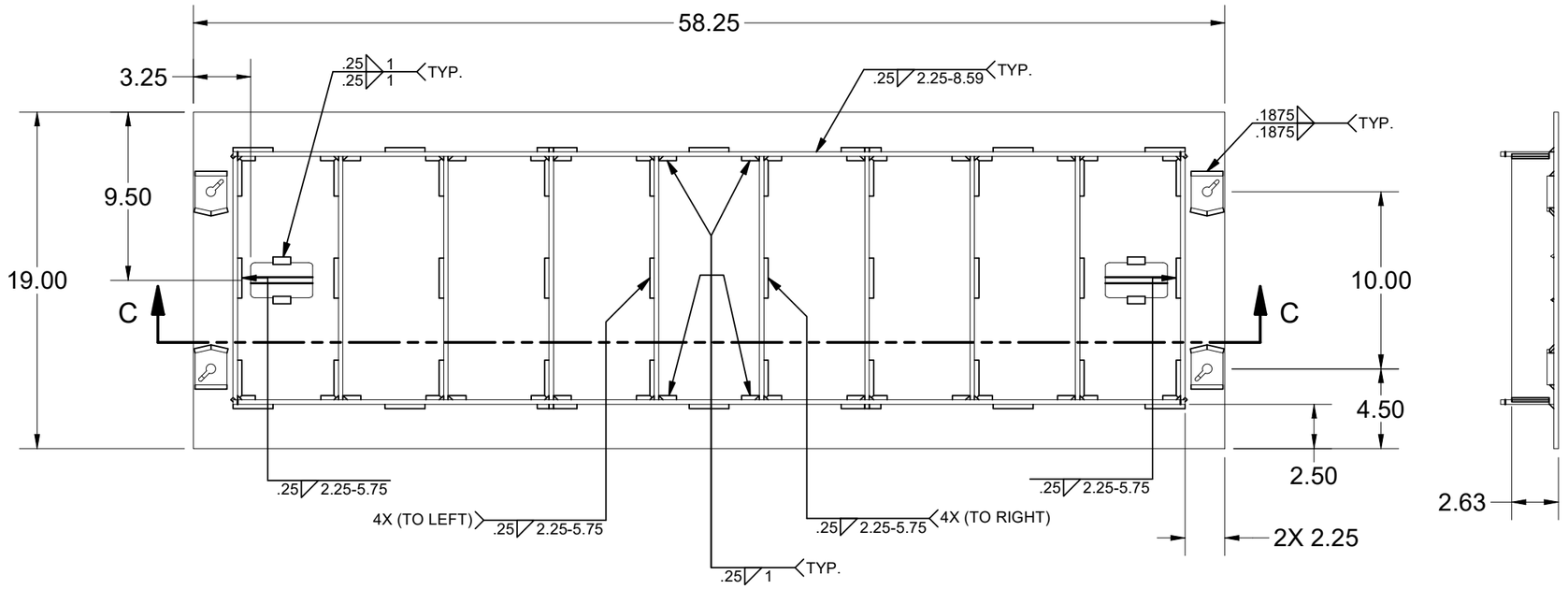

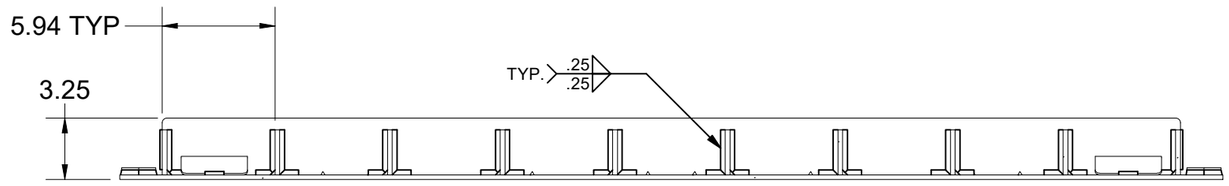

SECTION C-C
SCALE 1 / 8

MATERIAL FINISH: Galvanized	Infrastructure JENSEN 527 Dunn Circle, Sparks, NV 89431 775-352-2716 FAX: 755-358-8127 *JENSENMETALTECH.COM*	©2026 Jensen Infrastructure - All rights reserved. All materials appearing as Jensen Infrastructure documents and the like are proprietary work product and are protected under U.S. copyright and other laws. Unless in conjunction with business conducted with Jensen Infrastructure , any use of Jensen Infrastructure work product without express, written consent is prohibited, and recipient is prohibited from distributing any and all work product to non-approved third parties under penalty of civil action. This product shall only be produced in a Jensen Infrastructure facility.	PART NUMBER & DESCRIPTION: 200068644 DAS1-T-54102-D-TRX-G-BD-PG&E-SPLICE FVT REV: D-3-2
MATERIAL SURFACE: TraxPlate™			WEIGHT: 127.9 Lbs DRAWN BY: R. Dohr CREATED: 9/20/2022 MODIFIED: 2/3/2026 SHEET: 5

100005480.idw

BILL OF MATERIALS

ITEM	ITEM QTY	QTY	PART NUMBER	DESCRIPTION	PART NAME
1	4	4	200018691	FRAME BOLT DOUBLER SLOT	200018691
2	2	117.244 lbmass	100007734	Frame Component Steel Frame Side, Adjustable	200068625
3	16	16	200069094	STANDOFF BOLTING PLATFORM	200069094
4	2	85.778 lbmass	100007734	Frame Component Steel Frame End, Adjustable	200068624
5	4	2.200 lbmass	100007734	Frame Component Steel	200068627
6	16	7.204 lbmass	100007734	SQUARE NUT BRACKET-CUSTOM PG&E FVT	200069159
7	16	5.006 lbmass	100007734	STANDOFF SIDEWALL	200069158
8	2	52.406 lbmass	100007735	Frame Component Leveling Angle	200069902
9	4	4	100007728	NUT SELF-CLINCH 1/2-13 S-0813-1 RAW	100007728
10	1	1	100007700	SIGHT GLASS LIGHT CLIP	100007700
11	4	4	100007641	FRAME LIFTING BRACKET	100007641
12	6	6	100007011	HEX COIL NUT 3/4-4.5 PLAIN	100007011

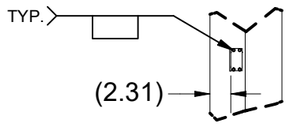

SECTION E-E

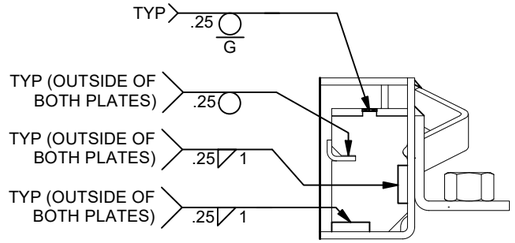

SECTION D-D

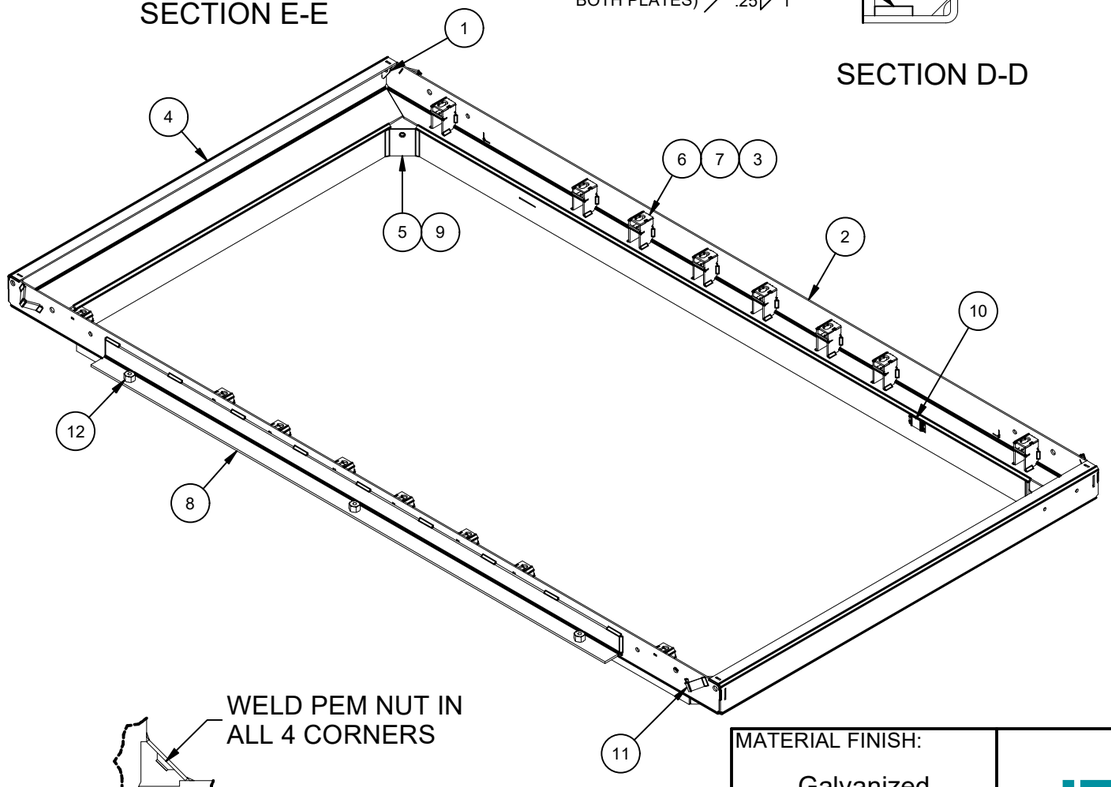

DETAIL F

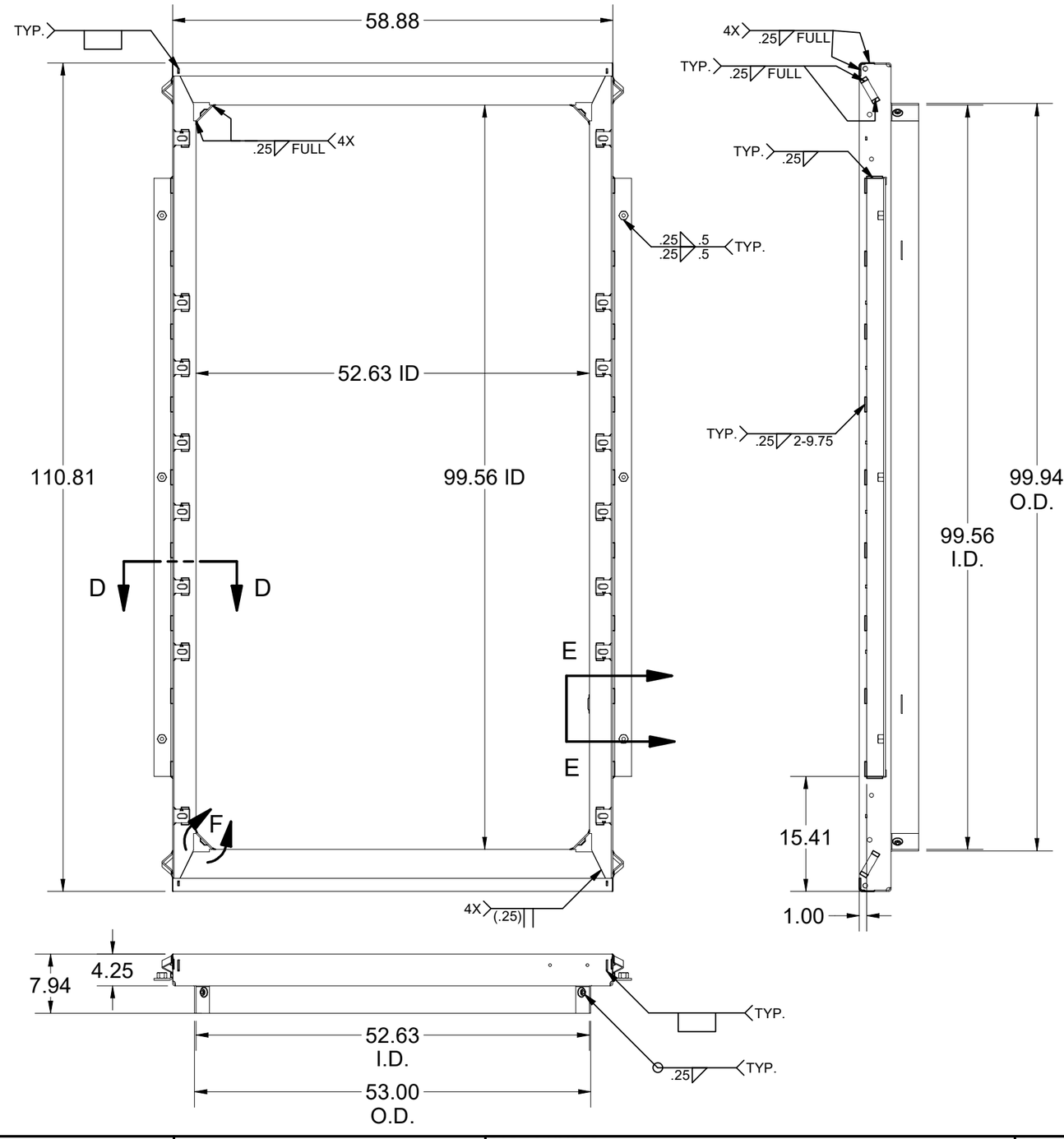

100005480.idw

MATERIAL FINISH: Galvanized		PART NUMBER & DESCRIPTION: 200068623 FAS-54102-AH-G-SG-PG&E-OH08-SPLICE FVT	REV: D-3-2
MATERIAL SURFACE: Smooth		WEIGHT: 275.59 Lbs	DRAWN BY: R. Dohr
		CREATED: 9/20/2022	MODIFIED: 2/3/2026
			SHEET: 6

Infrastructure JENSEN
527 Dunn Circle, Sparks, NV 89431
775-352-2716 FAX: 755-358-8127
JENSENMETALTECH.COM

©2026 Jensen Infrastructure - All rights reserved. All materials appearing as Jensen Infrastructure documents and the like are proprietary work product and are protected under U.S. copyright and other laws. Unless in conjunction with business conducted with Jensen Infrastructure , any use of Jensen Infrastructure work product without express, written consent is prohibited, and recipient is prohibited from distributing any and all work product to non-approved third parties under penalty of civil action. This product shall only be produced in a Jensen Infrastructure facility.

BILL OF MATERIALS

ITEM	ITEM QTY	QTY	PART NUMBER	DESCRIPTION	PART NAME
3	1	57.250 in	100005167	STRUCTURAL STEEL RECTANGULAR TUBE - 6 x 4 x 3/8	200068704
1	2	12.000 in	100005205	STRUCTURAL ANGLE UNEQUAL - A36 STEEL - L 3 x 2 x 3/8	100005205
2	2	95.500 in	100005184	STRUCTURAL ANGLE EQUAL - A36 STEEL - L 1.5 x 1.5 x 1/4	100005184

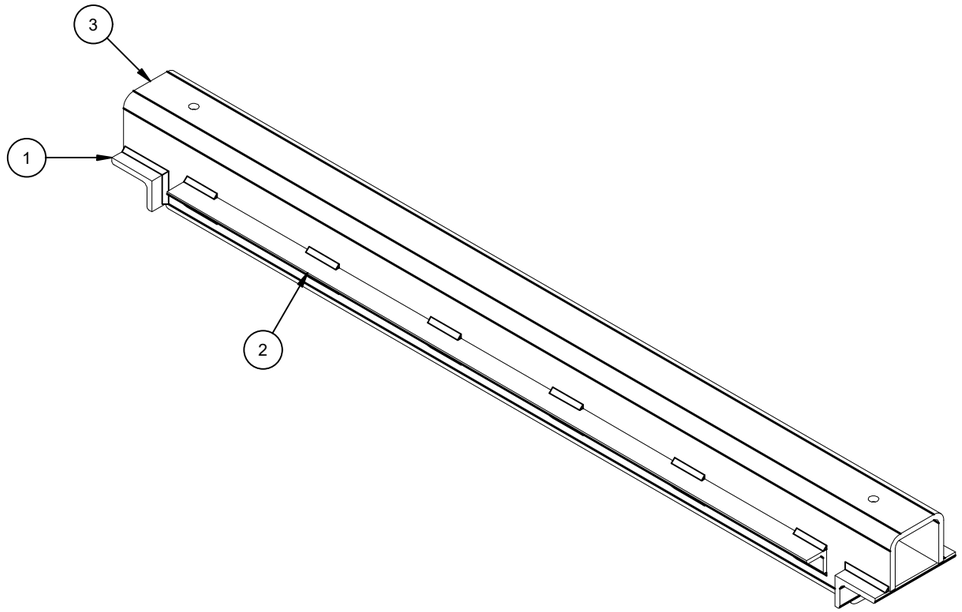

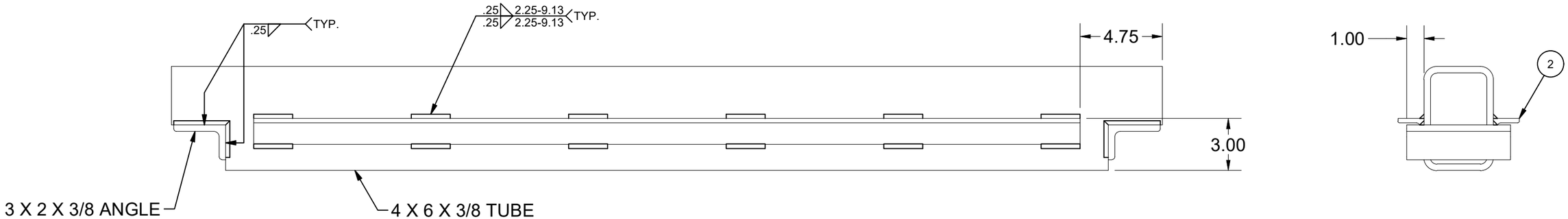

100005480.idw

MATERIAL FINISH: Galvanized	Infrastructure JENSEN 527 Dunn Circle, Sparks, NV 89431 775-352-2716 FAX: 755-358-8127 *JENSENMETALTECH.COM*	©2026 Jensen Infrastructure - All rights reserved. All materials appearing as Jensen Infrastructure documents and the like are proprietary work product and are protected under U.S. copyright and other laws. Unless in conjunction with business conducted with Jensen Infrastructure , any use of Jensen Infrastructure work product without express, written consent is prohibited, and recipient is prohibited from distributing any and all work product to non-approved third parties under penalty of civil action. This product shall only be produced in a Jensen Infrastructure facility.	PART NUMBER & DESCRIPTION: 200076144 Support Beam 57.25in W Beam 54102 PG&E FVT	REV: D-3-2
MATERIAL SURFACE: Smooth			WEIGHT: 126.64 Lbs / DRAWN BY: R. Dohr	SHEET: 7
			CREATED: 9/20/2022 / MODIFIED: 2/3/2026	

BURN LIST - BOM

PART NAME	ITEM QTY	QTY	DESCRIPTION	STOCK NUMBER	MATERIAL	MASS	SHEET
200068616	8	236.944 lbmass	Door Component Steel Channel	100007734	STL ASTM A36 SM-HRPO 60X120 RAW .1875	29.618 lbmass	10
200068618	1	138.201 lbmass	Door Component Steel Plate, Top Nameplate	100007735	STL ASTM A36 SM-HRPO RAW .250	138.201 lbmass	11
200068619	4	4.851 lbmass	Door Component Steel Side Bar with Pivot	100007735	STL ASTM A36 SM-HRPO RAW .250	1.213 lbmass	12
200068622	1	137.868 lbmass	Door Component Steel Plate, Bottom Nameplate	100007735	STL ASTM A36 SM-HRPO RAW .250	137.868 lbmass	13
200068624	2	85.778 lbmass	Frame Component Steel Frame End, Adjustable	100007734	STL ASTM A36 SM-HRPO 60X120 RAW .1875	42.889 lbmass	14
200068625	2	117.244 lbmass	Frame Component Steel Frame Side, Adjustable	100007734	STL ASTM A36 SM-HRPO 60X120 RAW .1875	58.622 lbmass	15
200068627	4	2.200 lbmass	Frame Component Steel	100007734	STL ASTM A36 SM-HRPO 60X120 RAW .1875	0.550 lbmass	16
200068641	2	156.302 lbmass	Door Component Steel Plate, Top	100007735	STL ASTM A36 SM-HRPO RAW .250	78.151 lbmass	17
200068642	4	45.507 lbmass	Door Component Steel Lap Bar	100007735	STL ASTM A36 SM-HRPO RAW .250	11.377 lbmass	18
200068643	20	46.434 lbmass	Door Component Steel Stiffener, Bar	100007735	STL ASTM A36 SM-HRPO RAW .250	2.322 lbmass	19
200069902	2	52.406 lbmass	Frame Component Leveling Angle	100007735	STL ASTM A36 SM-HRPO RAW .250	26.203 lbmass	21
200069158	16	5.006 lbmass	STANDOFF SIDEWALL	100007734	STL ASTM A36 SM-HRPO 60X120 RAW .1875	0.313 lbmass	22
200069159	16	7.204 lbmass	SQUARE NUT BRACKET-CUSTOM PG&E FVT	100007734	STL ASTM A36 SM-HRPO 60X120 RAW .1875	0.450 lbmass	23
200074065	4	18.982 lbmass	Door Component Steel Side Bar	100007735	STL ASTM A36 SM-HRPO RAW .250	4.745 lbmass	24
200074066	4	4.179 lbmass	Door Component Steel Offset Side Bar	100007735	STL ASTM A36 SM-HRPO RAW .250	1.045 lbmass	25

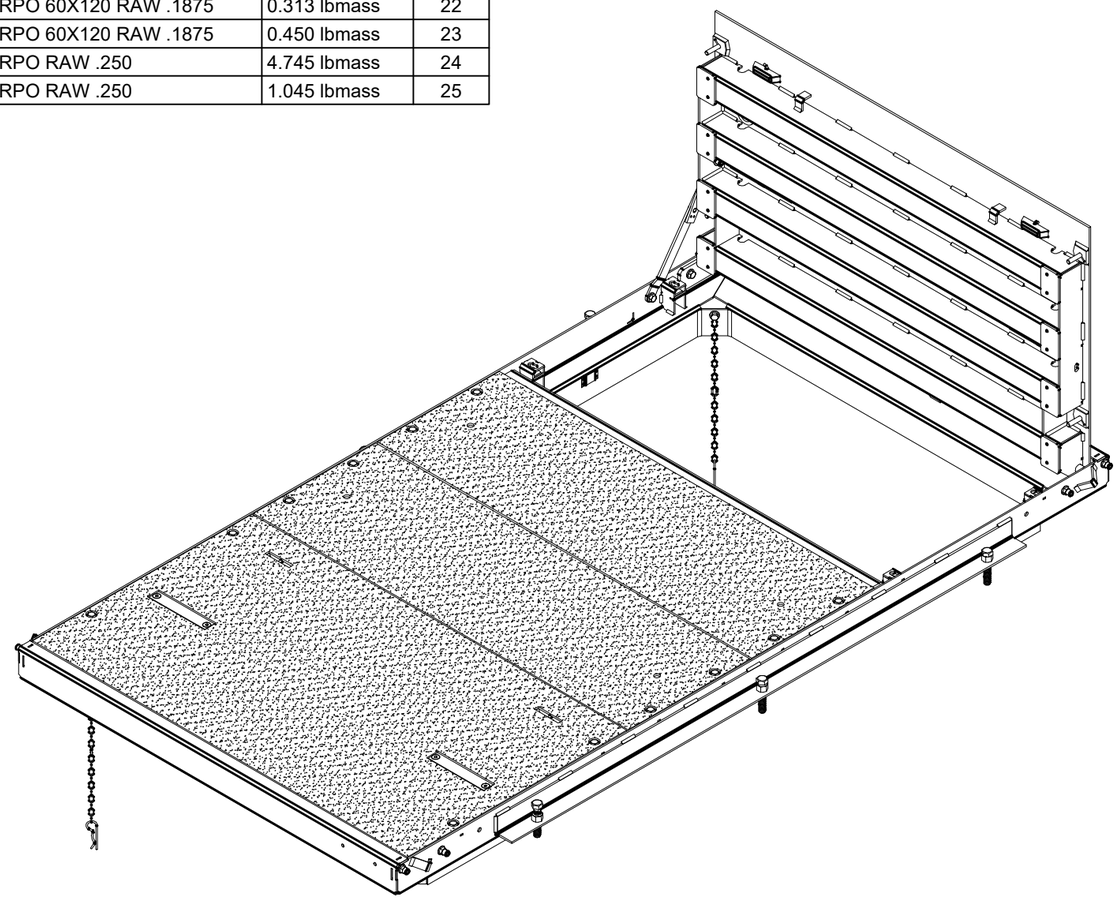

100005480.idw

MATERIAL FINISH: Galvanized

MATERIAL SURFACE: TraxPlate™

Infrastructure JENSEN
527 Dunn Circle, Sparks, NV 89431
775-352-2716 FAX: 755-358-8127
JENSENMETALTECH.COM

©2026 Jensen Infrastructure - All rights reserved.
All materials appearing as Jensen Infrastructure documents and the like are proprietary work product and are protected under U.S. copyright and other laws. Unless in conjunction with business conducted with Jensen Infrastructure , any use of Jensen Infrastructure work product without express, written consent is prohibited, and recipient is prohibited from distributing any and all work product to non-approved third parties under penalty of civil action.
This product shall only be produced in a Jensen Infrastructure facility.

PART NUMBER & DESCRIPTION: 100005480 CAS2-54102-AH-TRX-G-SG-GR-PG&E-OH08-SPLICE FVT

REV: D-3-2

WEIGHT: 1510.17 Lbs

DRAWN BY: R. Dohr

SHEET: 8

CREATED: 9/20/2022

MODIFIED: 2/3/2026

CUT LIST - BOM

PART NAME	ITEM QTY	BASE QTY	QTY	DESCRIPTION	PART NUMBER	MASS	SHEET
100005184	6	47.75 in	286.500 in	STRUCTURAL ANGLE EQUAL - A36 STEEL - L 1.5 x 1.5 x 1/4	100005184	9.368 lbmass	
200068704	3	57.250 in	171.750 in	STRUCTURAL STEEL RECTANGULAR TUBE - 6 x 4 x 3/8	100005167	101.376 lbmass	20
200068718	6	6.000 in	36.000 in	STRUCTURAL ANGLE UNEQUAL - A36 STEEL - L 3 x 2 x 3/8	100005205	2.968 lbmass	21

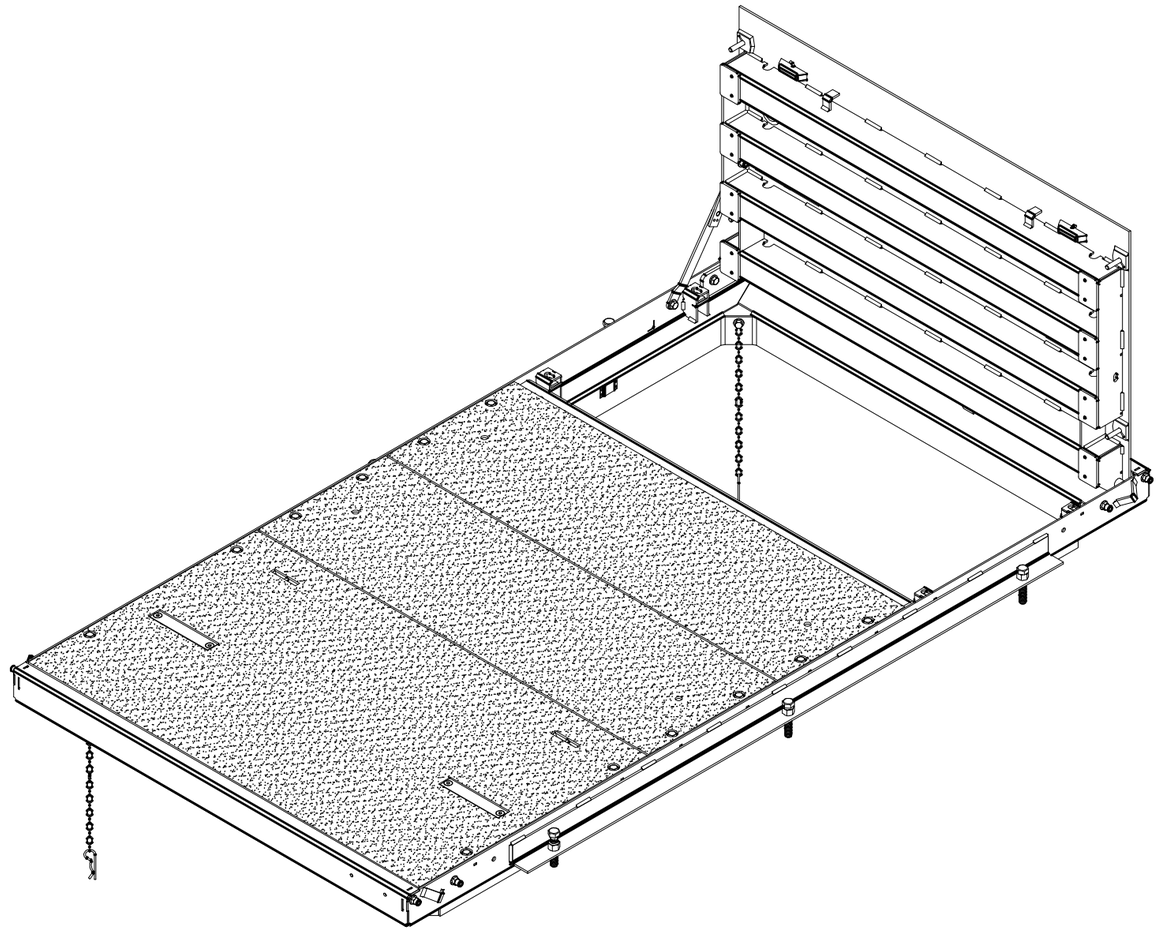

100005480.idw

MATERIAL FINISH:
Galvanized

MATERIAL SURFACE:
TraxPlate™

Infrastructure
JENSEN
527 Dunn Circle, Sparks, NV 89431
775-352-2716 FAX: 755-358-8127
JENSENMETALTECH.COM

©2026 Jensen Infrastructure - All rights reserved.
All materials appearing as Jensen Infrastructure documents and the like are proprietary work product and are protected under U.S. copyright and other laws.
Unless in conjunction with business conducted with Jensen Infrastructure , any use of Jensen Infrastructure work product without express, written consent is prohibited, and recipient is prohibited from distributing any and all work product to non-approved third parties under penalty of civil action.
This product shall only be produced in a Jensen Infrastructure facility.

PART NUMBER & DESCRIPTION: 100005480
CAS2-54102-AH-TRX-G-SG-GR-PG&E-OH08-SPLICE FVT

REV: D-3-2

WEIGHT: 1510.17 Lbs

DRAWN BY: R. Dohr

SHEET: 9

CREATED: 9/20/2022

MODIFIED: 2/3/2026

ASYMMETRIC

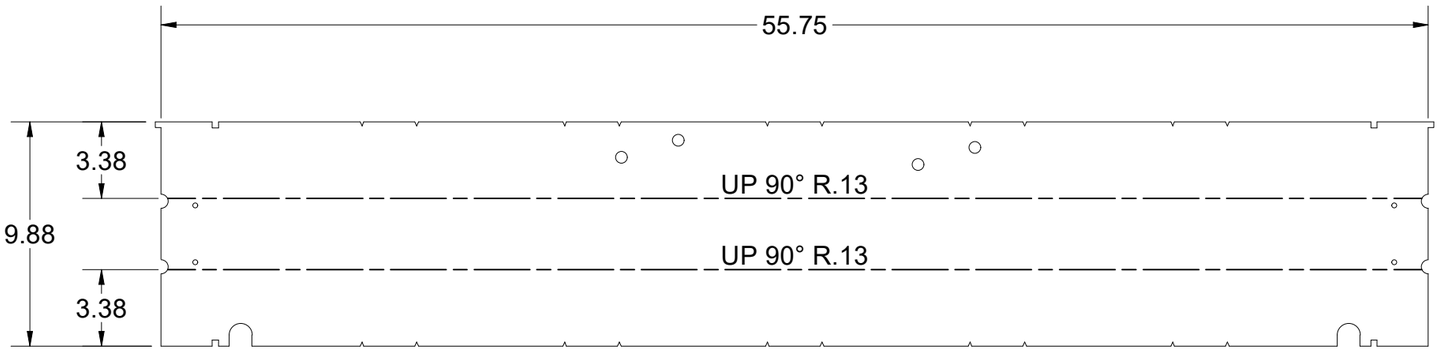

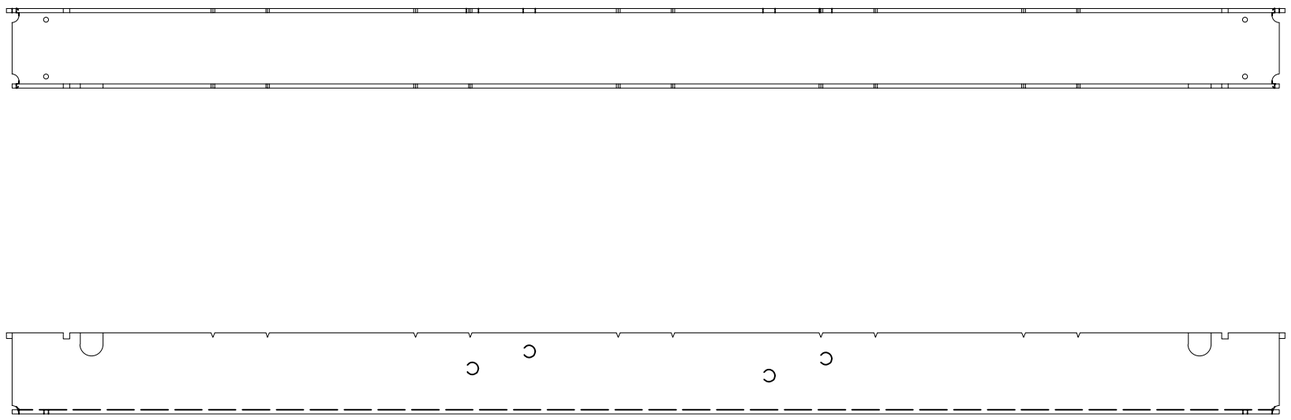

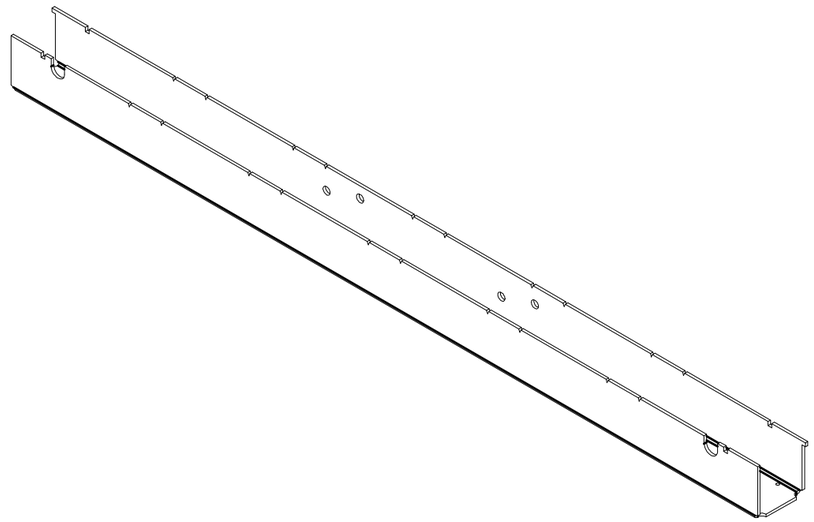

100005480.idw

BEND TABLE				MATERIAL IFS: 100007734
BEND RADIUS	V-OPENING	BEND ANGLE	BEND DEDUCTION	MATERIAL THK: 0.1875
0.125	2	90	0.375	MAT DESCRIPTION: STL ASTM A36 SM-HRPO 60X120 RAW .1875

Infrastructure
JENSEN
527 Dunn Circle, Sparks, NV 89431
775-352-2716 FAX: 755-358-8127
JENSENMETALTECH.COM

©2026 Jensen Infrastructure - All rights reserved.
All materials appearing as Jensen Infrastructure documents and the like are proprietary work product and are protected under U.S. copyright and other laws. Unless in conjunction with business conducted with Jensen Infrastructure , any use of Jensen Infrastructure work product without express, written consent is prohibited, and recipient is prohibited from distributing any and all work product to non-approved third parties under penalty of civil action.
This product shall only be produced in a Jensen Infrastructure facility.

NAME & DESCRIPTION: 200068616 Door Component Steel Channel		REV: D-3-2
WEIGHT: 29.618 lbmass	DRAWN BY: R. Dohr	SHEET: 10 OF 25
CREATED: 9/20/2022	MODIFIED: 2/3/2026	



BEND TABLE				MATERIAL IFS: 100007735
BEND RADIUS	V-OPENING	BEND ANGLE	BEND DEDUCTION	MATERIAL THK: 0.25
-	-	-	-	MAT DESCRIPTION: STL ASTM A36 SM-HRPO RAW .250

Infrastructure
JENSEN
527 Dunn Circle, Sparks, NV 89431
775-352-2716 FAX: 755-358-8127
JENSENMETALTECH.COM

©2026 Jensen Infrastructure - All rights reserved.
All materials appearing as Jensen Infrastructure documents and the like are proprietary work product and are protected under U.S. copyright and other laws. Unless in conjunction with business conducted with Jensen Infrastructure , any use of Jensen Infrastructure work product without express, written consent is prohibited, and recipient is prohibited from distributing any and all work product to non-approved third parties under penalty of civil action.
This product shall only be produced in a Jensen Infrastructure facility.

NAME & DESCRIPTION:	200068618 Door Component Steel Plate, Top Nameplate	REV: D-3-2
WEIGHT: 138.201 lbmass	DRAWN BY: R. Dohr	SHEET: 11 OF 25
CREATED: 9/20/2022	MODIFIED: 2/3/2026	

100005480.idw

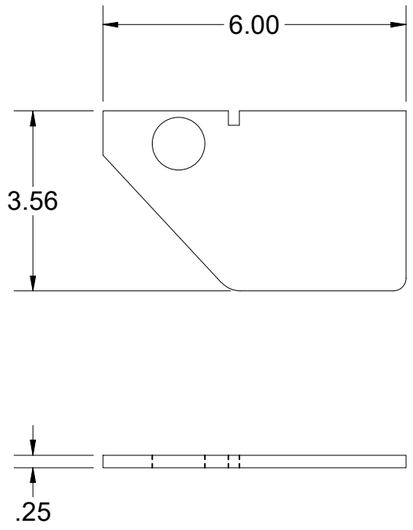

BEND TABLE				MATERIAL IFS: 100007735			
BEND RADIUS	V-OPENING	BEND ANGLE	BEND DEDUCTION	MATERIAL THK: 0.25			
-	-	-	-	MAT DESCRIPTION: STL ASTM A36 SM-HRPO RAW .250			

Infrastructure
JENSEN
527 Dunn Circle, Sparks, NV 89431
775-352-2716 FAX: 755-358-8127
JENSENMETALTECH.COM

©2026 Jensen Infrastructure - All rights reserved.
All materials appearing as Jensen Infrastructure documents and the like are proprietary work product and are protected under U.S. copyright and other laws. Unless in conjunction with business conducted with Jensen Infrastructure , any use of Jensen Infrastructure work product without express, written consent is prohibited, and recipient is prohibited from distributing any and all work product to non-approved third parties under penalty of civil action.
This product shall only be produced in a Jensen Infrastructure facility.

NAME & DESCRIPTION: 200068619 Door Component Steel Side Bar with Pivot		REV: D-3-2
WEIGHT: 1.213 lbmass	DRAWN BY: R. Dohr	SHEET: 12 OF 25
CREATED: 9/20/2022	MODIFIED: 2/3/2026	

100005480.idw

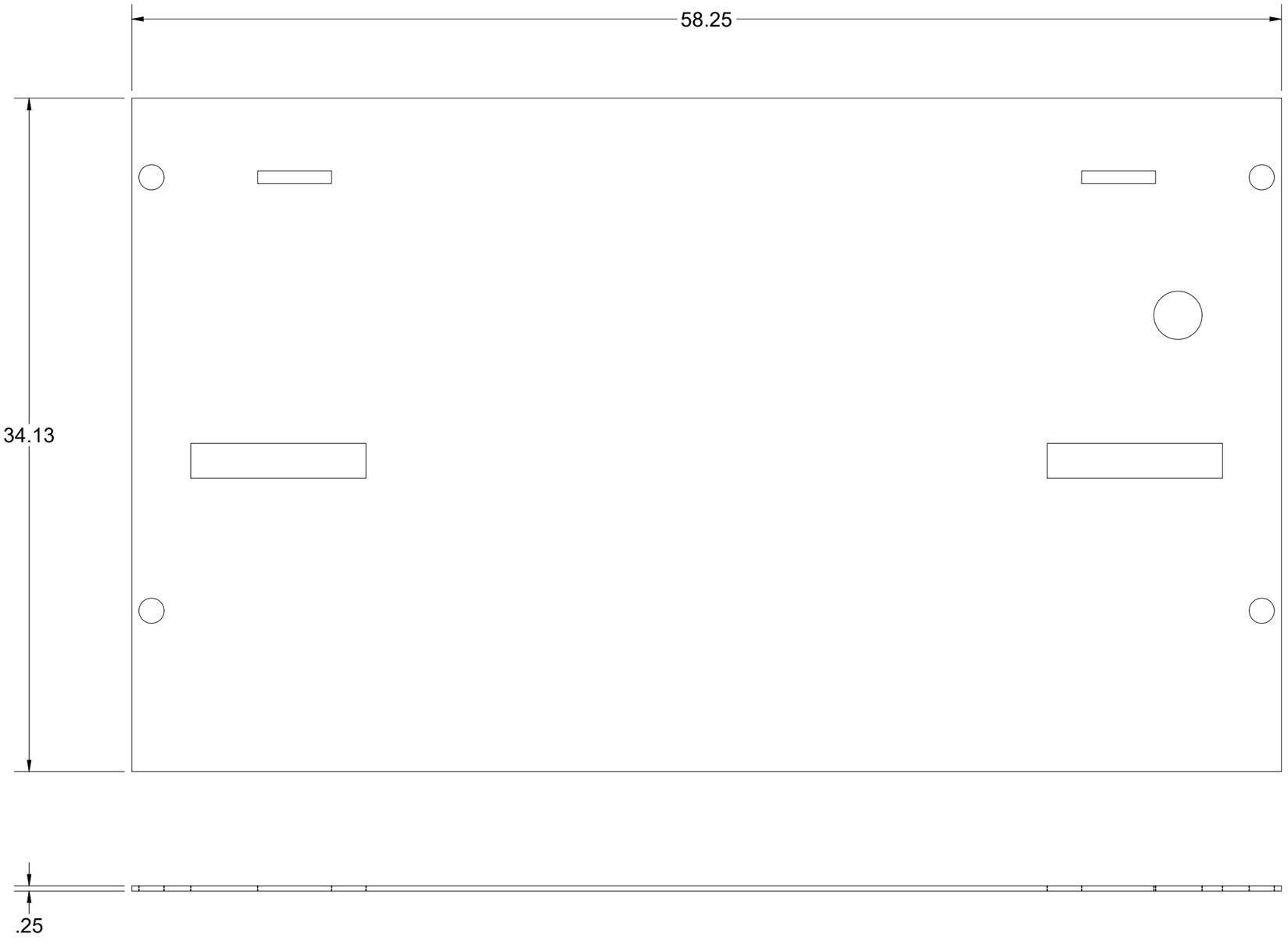

BEND TABLE				MATERIAL IFS: 100007735
BEND RADIUS	V-OPENING	BEND ANGLE	BEND DEDUCTION	MATERIAL THK: 0.25
-	-	-	-	MAT DESCRIPTION: STL ASTM A36 SM-HRPO RAW .250

Infrastructure
JENSEN
527 Dunn Circle, Sparks, NV 89431
775-352-2716 FAX: 755-358-8127
JENSENMETALTECH.COM

©2026 Jensen Infrastructure - All rights reserved.
All materials appearing as Jensen Infrastructure documents and the like are proprietary work product and are protected under U.S. copyright and other laws. Unless in conjunction with business conducted with Jensen Infrastructure , any use of Jensen Infrastructure work product without express, written consent is prohibited, and recipient is prohibited from distributing any and all work product to non-approved third parties under penalty of civil action.
This product shall only be produced in a Jensen Infrastructure facility.

NAME & DESCRIPTION: 200068622 Door Component Steel Plate, Bottom Nameplate		REV: D-3-2
WEIGHT: 137.868 lbmass	DRAWN BY: R. Dohr	SHEET: 13 OF 25
CREATED: 9/20/2022	MODIFIED: 2/3/2026	

100005480.idw

ASYMMETRIC

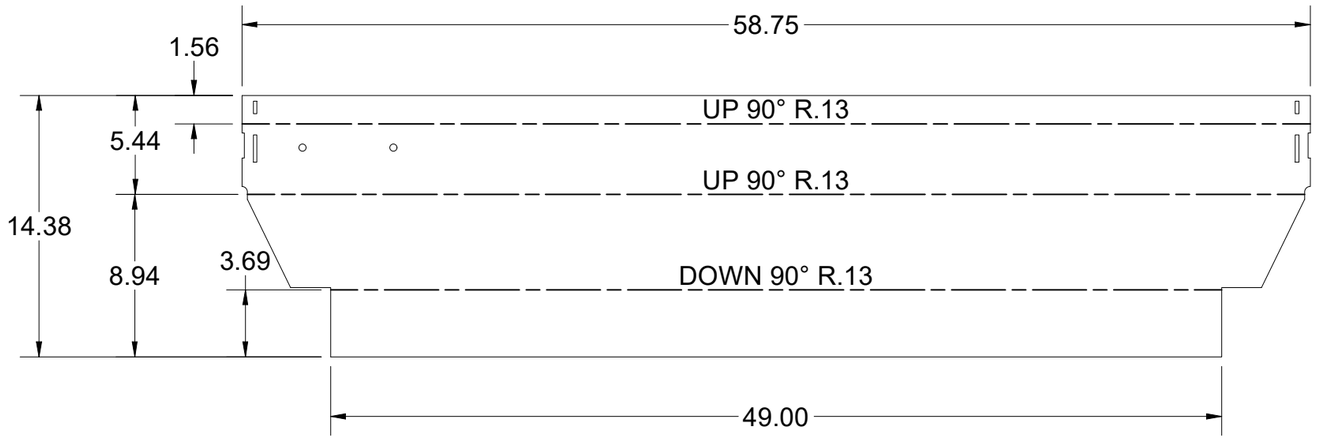

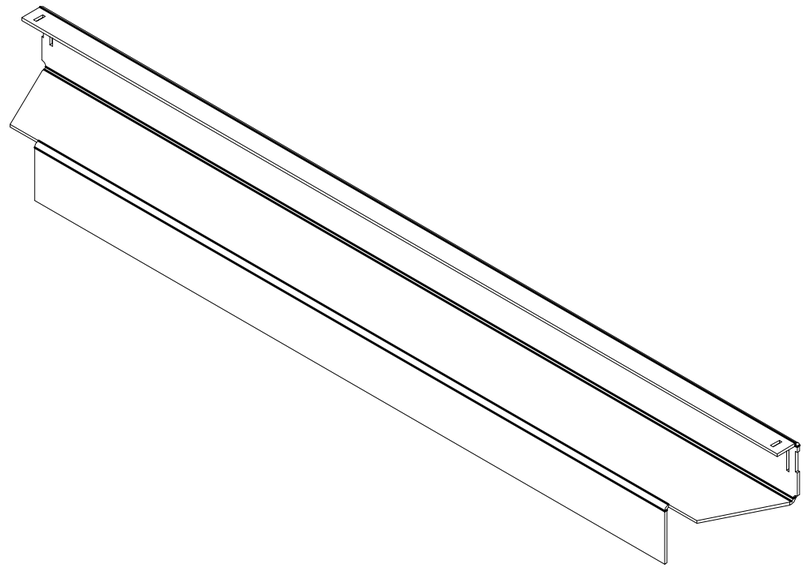

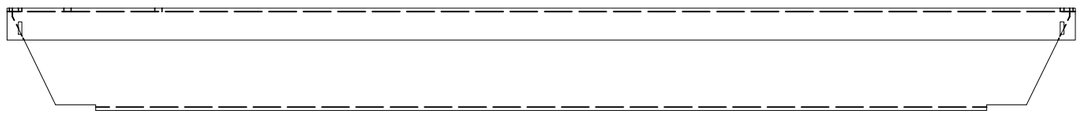

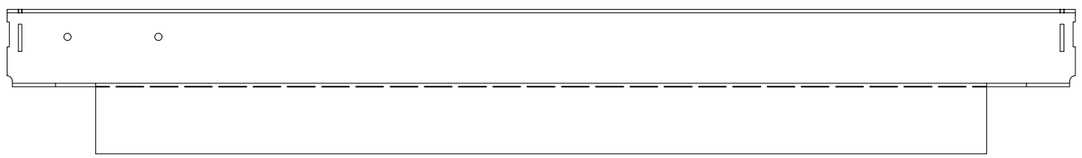

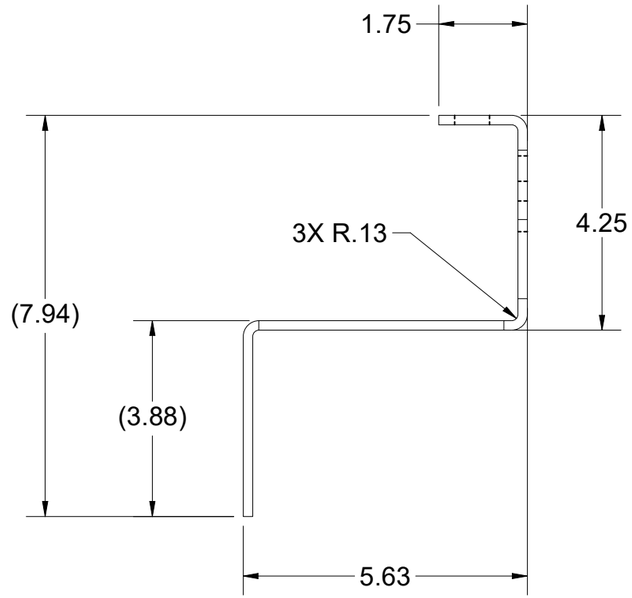

100005480.idw

BEND TABLE			
BEND RADIUS	V-OPENING	BEND ANGLE	BEND DEDUCTION
0.125	2	90	0.3750

MATERIAL IFS: 100007734

MATERIAL THK: 0.1875

MAT DESCRIPTION: STL ASTM A36 SM-HRPO 60X120 RAW .1875

Infrastructure JENSEN

527 Dunn Circle, Sparks, NV 89431
775-352-2716 FAX: 755-358-8127
JENSENMETALTECH.COM

©2026 Jensen Infrastructure - All rights reserved. All materials appearing as Jensen Infrastructure documents and the like are proprietary work product and are protected under U.S. copyright and other laws. Unless in conjunction with business conducted with Jensen Infrastructure , any use of Jensen Infrastructure work product without express, written consent is prohibited, and recipient is prohibited from distributing any and all work product to non-approved third parties under penalty of civil action. This product shall only be produced in a Jensen Infrastructure facility.

NAME & DESCRIPTION: 200068624 — Frame Component Steel Frame End, Adjustable

REV: D-3-2

WEIGHT: 42.889 lbmass

DRAWN BY: R. Dohr

CREATED: 9/20/2022

MODIFIED: 2/3/2026

SHEET: 14 OF 25

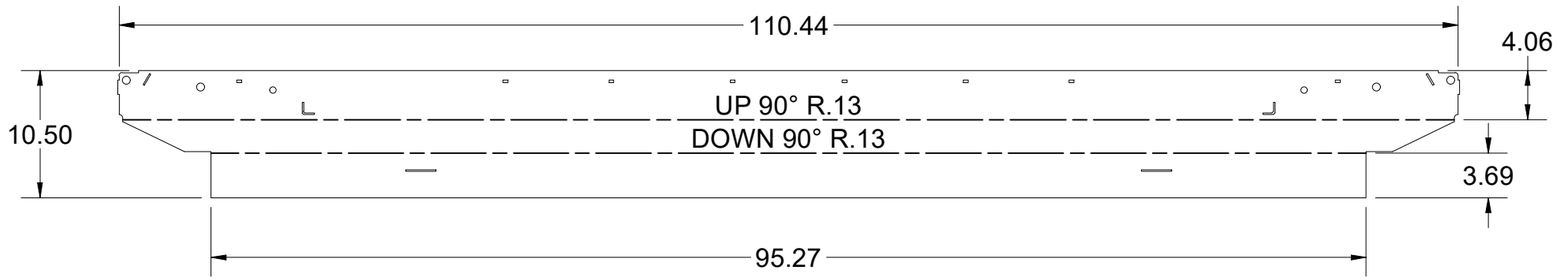

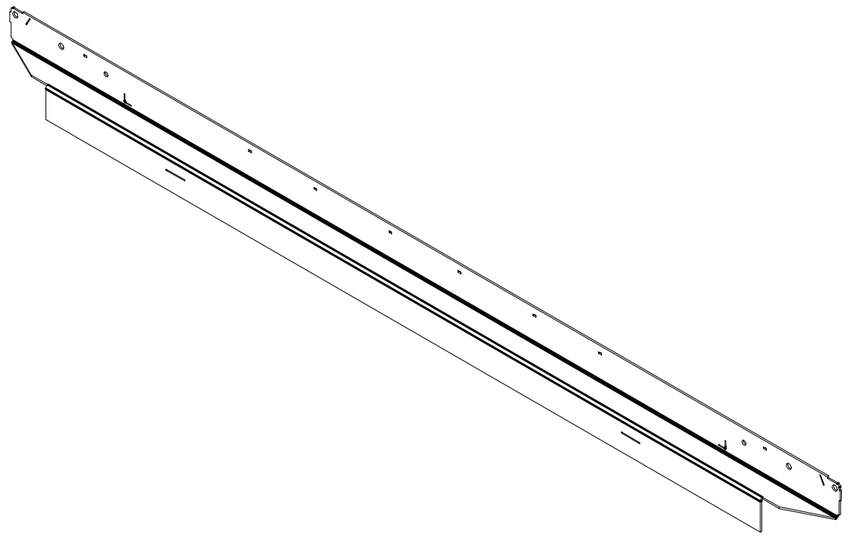

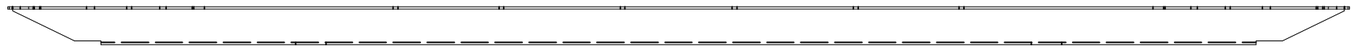

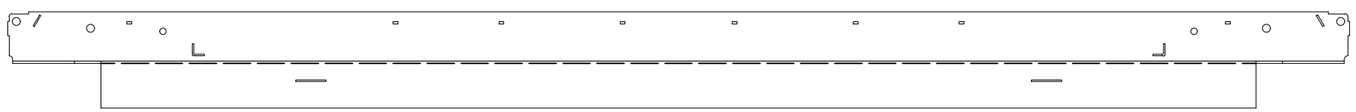

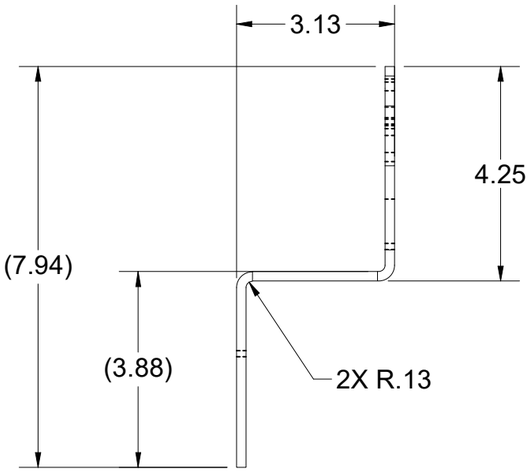

BEND TABLE				MATERIAL IFS: 100007734
BEND RADIUS	V-OPENING	BEND ANGLE	BEND DEDUCTION	MATERIAL THK: 0.1875
0.125	2	90	0.3750	MAT DESCRIPTION: STL ASTM A36 SM-HRPO 60X120 RAW .1875

Infrastructure
JENSEN
527 Dunn Circle, Sparks, NV 89431
775-352-2716 FAX: 755-358-8127
JENSENMETALTECH.COM

©2026 Jensen Infrastructure - All rights reserved.
All materials appearing as Jensen Infrastructure documents and the like are proprietary work product and are protected under U.S. copyright and other laws. Unless in conjunction with business conducted with Jensen Infrastructure , any use of Jensen Infrastructure work product without express, written consent is prohibited, and recipient is prohibited from distributing any and all work product to non-approved third parties under penalty of civil action.
This product shall only be produced in a Jensen Infrastructure facility.

NAME & DESCRIPTION: 200068625 Frame Component Steel Frame Side, Adjustable		REV: D-3-2
WEIGHT: 58.622 lbmass	DRAWN BY: R. Dohr	SHEET: 15 OF 25
CREATED: 9/20/2022	MODIFIED: 2/3/2026	

100005480.idw

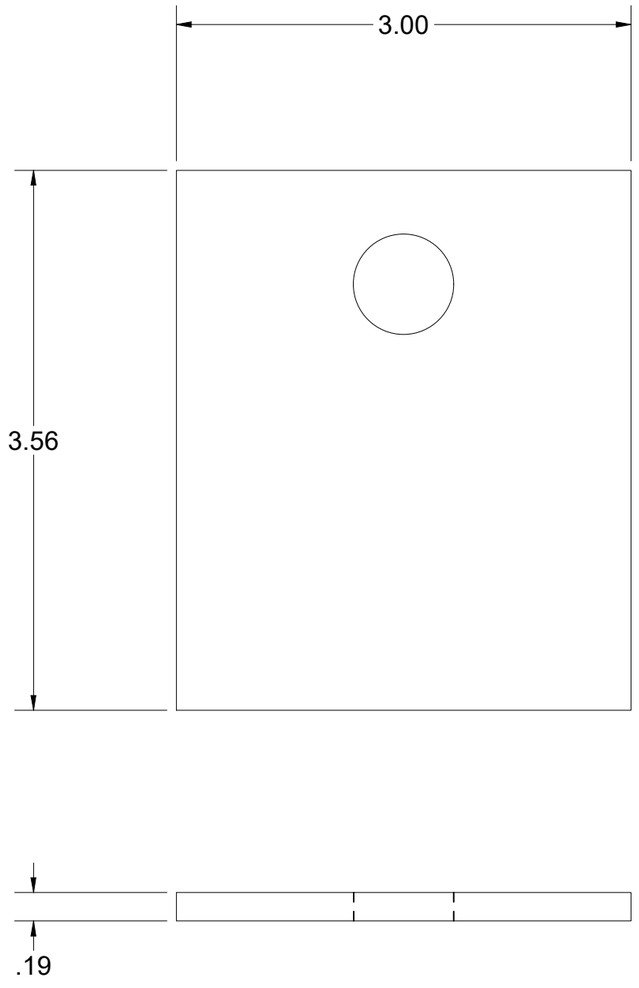

BEND TABLE				MATERIAL IFS: 100007734
BEND RADIUS	V-OPENING	BEND ANGLE	BEND DEDUCTION	MATERIAL THK: 0.1875
-	-	-	-	MAT DESCRIPTION: STL ASTM A36 SM-HRPO 60X120 RAW .1875

Infrastructure
JENSEN
527 Dunn Circle, Sparks, NV 89431
775-352-2716 FAX: 755-358-8127
JENSENMETALTECH.COM

©2026 Jensen Infrastructure - All rights reserved.
All materials appearing as Jensen Infrastructure documents and the like are proprietary work product and are protected under U.S. copyright and other laws. Unless in conjunction with business conducted with Jensen Infrastructure , any use of Jensen Infrastructure work product without express, written consent is prohibited, and recipient is prohibited from distributing any and all work product to non-approved third parties under penalty of civil action.
This product shall only be produced in a Jensen Infrastructure facility.

NAME & DESCRIPTION:	200068627 Frame Component Steel	REV:
WEIGHT: 0.550 lbmass	DRAWN BY: R. Dohr	SHEET: 16 OF 25
CREATED: 9/20/2022	MODIFIED: 2/3/2026	

100005480.idw

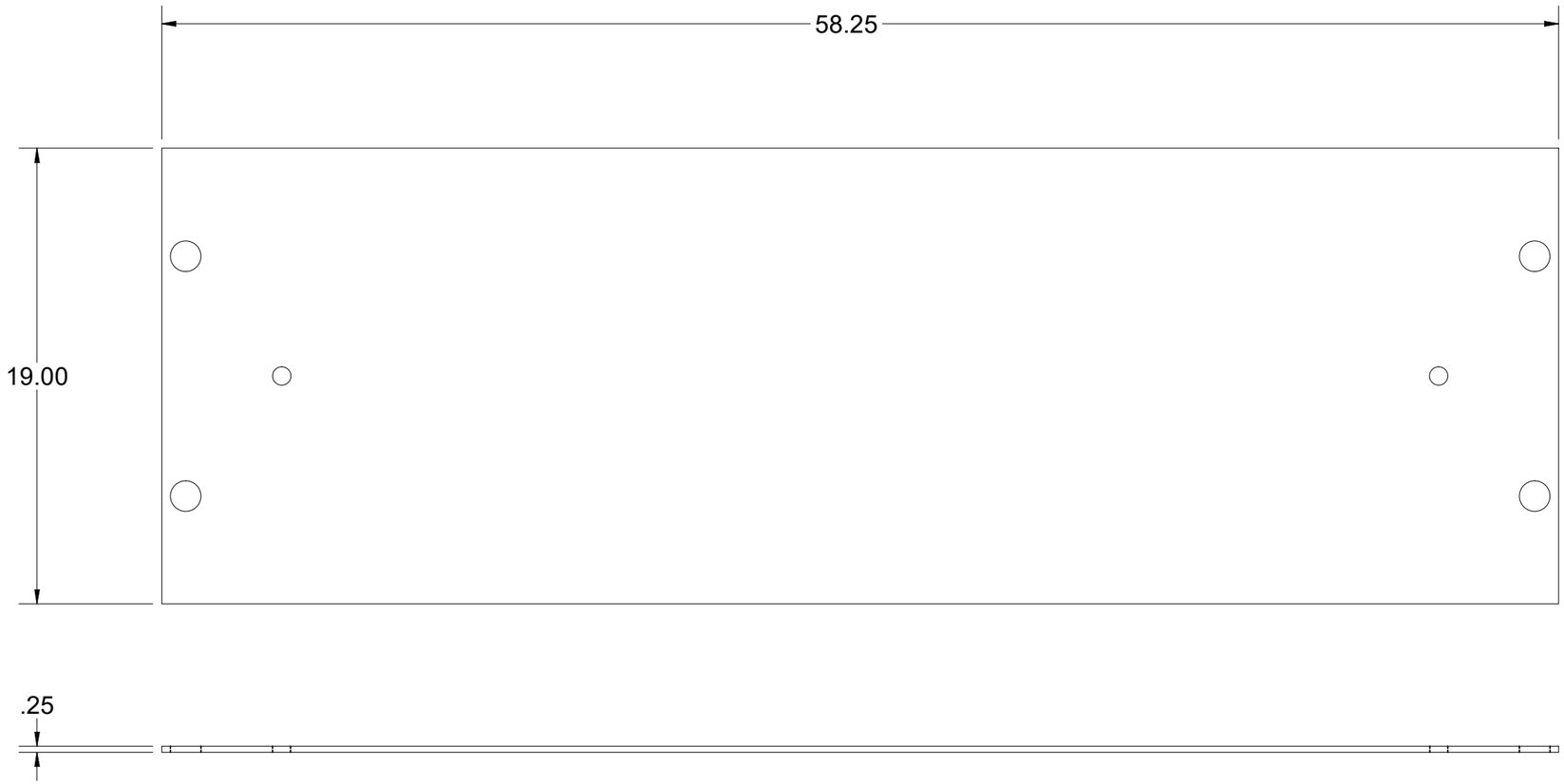

BEND TABLE				MATERIAL IFS: 100007735			
BEND RADIUS	V-OPENING	BEND ANGLE	BEND DEDUCTION	MATERIAL THK: 0.25			
-	-	-	-	MAT DESCRIPTION: STL ASTM A36 SM-HRPO RAW .250			

Infrastructure
JENSEN
527 Dunn Circle, Sparks, NV 89431
775-352-2716 FAX: 755-358-8127
JENSENMETALTECH.COM

©2026 Jensen Infrastructure - All rights reserved.
All materials appearing as Jensen Infrastructure documents and the like are proprietary work product and are protected under U.S. copyright and other laws. Unless in conjunction with business conducted with Jensen Infrastructure , any use of Jensen Infrastructure work product without express, written consent is prohibited, and recipient is prohibited from distributing any and all work product to non-approved third parties under penalty of civil action.
This product shall only be produced in a Jensen Infrastructure facility.

NAME & DESCRIPTION: 200068641 Door Component Steel Plate, Top		REV: D-3-2
WEIGHT: 78.151 lbmass	DRAWN BY: R. Dohr	SHEET: 17 OF 25
CREATED: 9/20/2022	MODIFIED: 2/3/2026	

100005480.idw

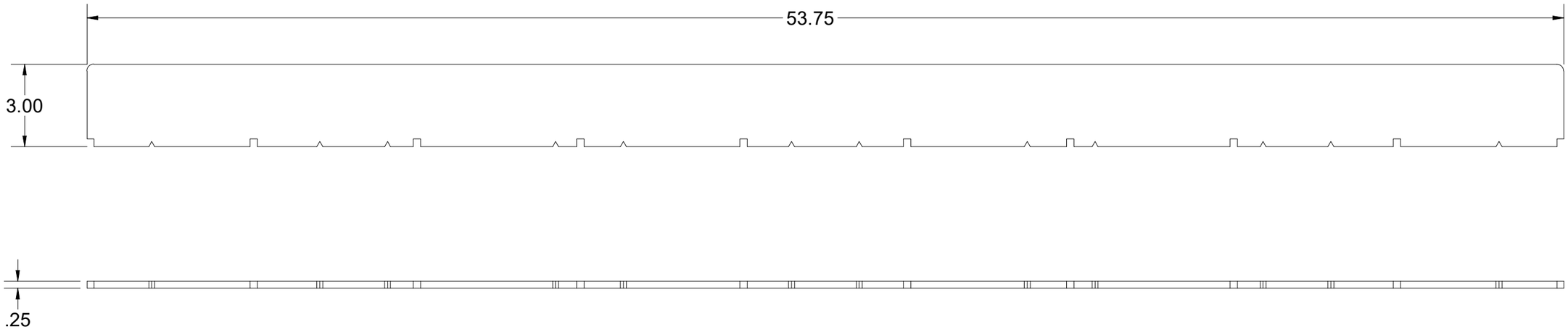

BEND TABLE				MATERIAL IFS: 100007735
BEND RADIUS	V-OPENING	BEND ANGLE	BEND DEDUCTION	MATERIAL THK: 0.25
-	-	-	-	MAT DESCRIPTION: STL ASTM A36 SM-HRPO RAW .250

Infrastructure JENSEN
527 Dunn Circle, Sparks, NV 89431
775-352-2716 FAX: 755-358-8127
JENSENMETALTECH.COM

©2026 Jensen Infrastructure - All rights reserved.
All materials appearing as Jensen Infrastructure documents and the like are proprietary work product and are protected under U.S. copyright and other laws. Unless in conjunction with business conducted with Jensen Infrastructure , any use of Jensen Infrastructure work product without express, written consent is prohibited, and recipient is prohibited from distributing any and all work product to non-approved third parties under penalty of civil action.
This product shall only be produced in a Jensen Infrastructure facility.

NAME & DESCRIPTION: 200068642 Door Component Steel Lap Bar		REV: D-3-2
WEIGHT: 11.377 lbmass	DRAWN BY: R. Dohr	SHEET: 18 OF 25
CREATED: 9/20/2022	MODIFIED: 2/3/2026	

100005480.idw

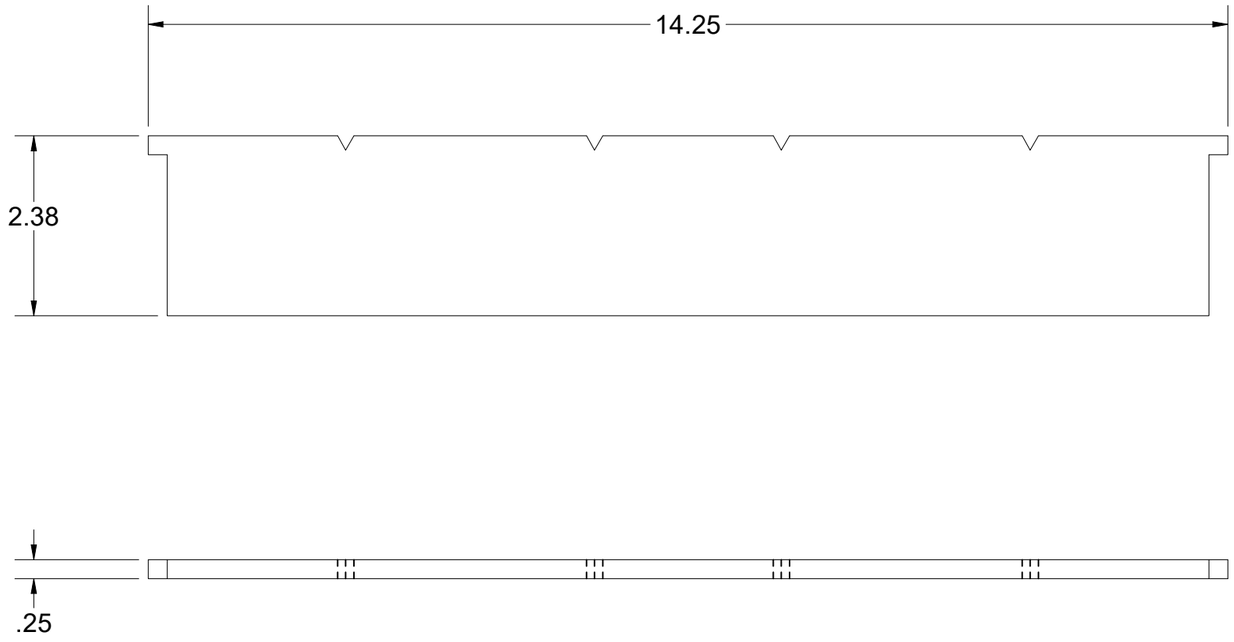

BEND TABLE				MATERIAL IFS: 100007735
BEND RADIUS	V-OPENING	BEND ANGLE	BEND DEDUCTION	MATERIAL THK: 0.25
-	-	-	-	MAT DESCRIPTION: STL ASTM A36 SM-HRPO RAW .250

Infrastructure
JENSEN
527 Dunn Circle, Sparks, NV 89431
775-352-2716 FAX: 755-358-8127
JENSENMETALTECH.COM

©2026 Jensen Infrastructure - All rights reserved.
All materials appearing as Jensen Infrastructure documents and the like are proprietary work product and are protected under U.S. copyright and other laws. Unless in conjunction with business conducted with Jensen Infrastructure , any use of Jensen Infrastructure work product without express, written consent is prohibited, and recipient is prohibited from distributing any and all work product to non-approved third parties under penalty of civil action.
This product shall only be produced in a Jensen Infrastructure facility.

NAME & DESCRIPTION:	200068643 Door Component Steel Stiffener, Bar	REV:
WEIGHT: 2.322 lbmass	DRAWN BY: R. Dohr	SHEET: 19 OF 25
CREATED: 9/20/2022	MODIFIED: 2/3/2026	

100005480.idw

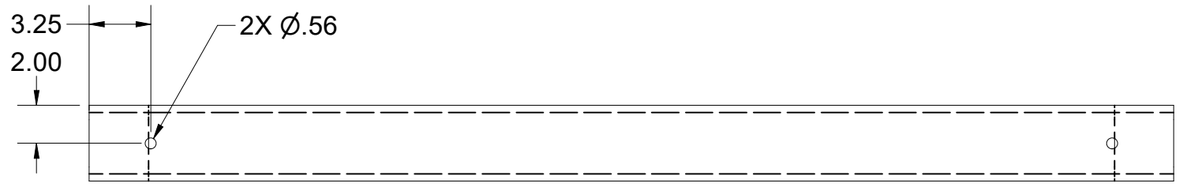

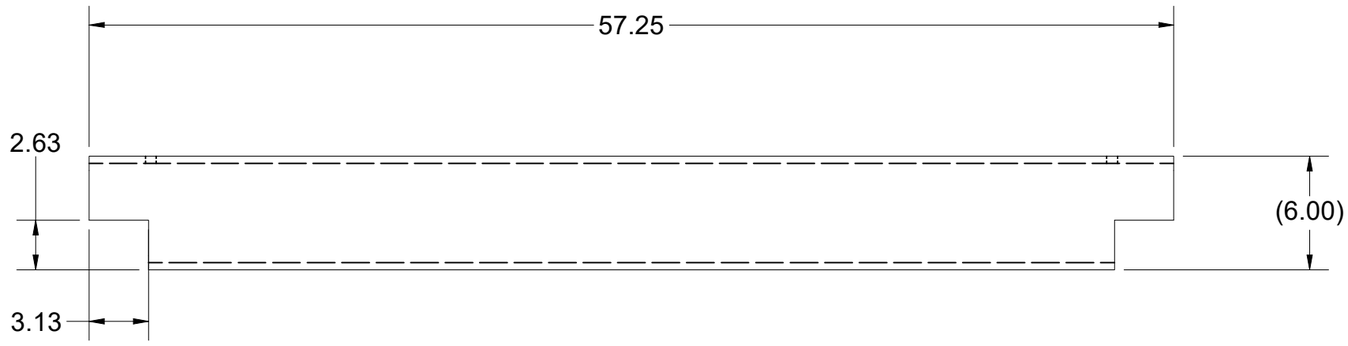

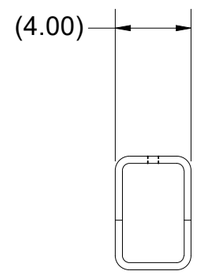

BEND TABLE				MATERIAL IFS: 100005167
BEND RADIUS	V-OPENING	BEND ANGLE	BEND DEDUCTION	MATERIAL THK: 3/8
				MAT DESCRIPTION: STRUCTURAL STEEL RECTANGULAR TUBE - 6 x 4 x 3/8

Infrastructure
JENSEN
527 Dunn Circle, Sparks, NV 89431
775-352-2716 FAX: 755-358-8127
JENSENMETALTECH.COM

©2026 Jensen Infrastructure - All rights reserved.
All materials appearing as Jensen Infrastructure documents and the like are proprietary work product and are protected under U.S. copyright and other laws. Unless in conjunction with business conducted with Jensen Infrastructure , any use of Jensen Infrastructure work product without express, written consent is prohibited, and recipient is prohibited from distributing any and all work product to non-approved third parties under penalty of civil action.
This product shall only be produced in a Jensen Infrastructure facility.

NAME & DESCRIPTION: 200068704 STRUCTURAL STEEL RECTANGULAR TUBE - 6 x 4 x 3/8		REV: D-3-2
WEIGHT: 101.376 lbmass	DRAWN BY: R. Dohr	SHEET: 20 OF 25
CREATED: 9/20/2022	MODIFIED: 2/3/2026	

100005480.idw

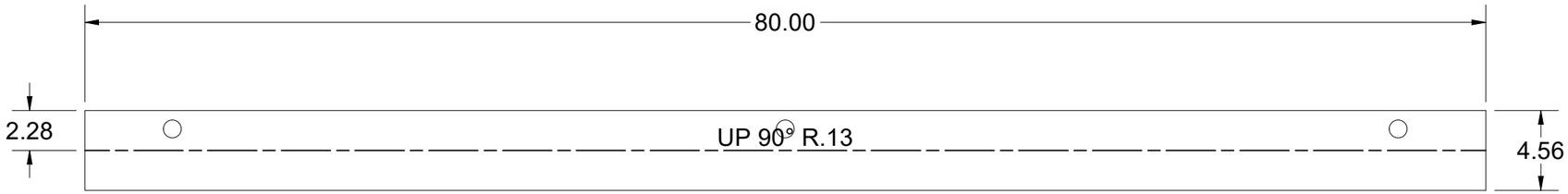

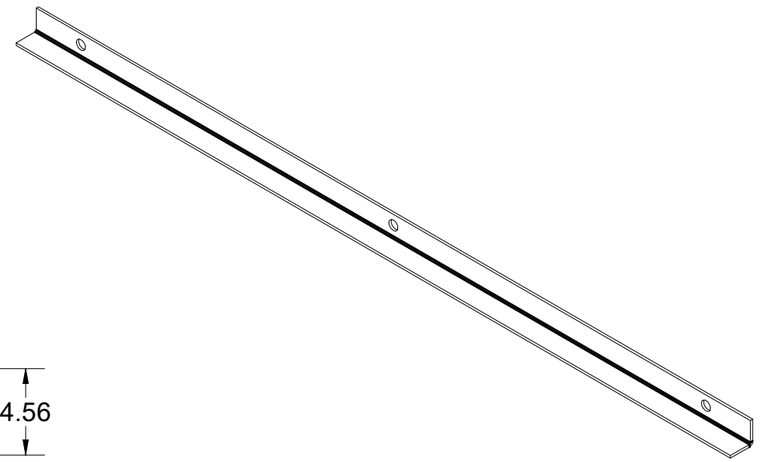

100005480.idw



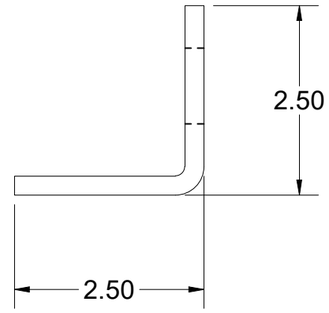

BEND TABLE				MATERIAL IFS: 100007735
BEND RADIUS	V-OPENING	BEND ANGLE	BEND DEDUCTION	MATERIAL THK: 0.25
0.125	2	90	0.440	MAT DESCRIPTION: STL ASTM A36 SM-HRPO RAW .250

Infrastructure
JENSEN
527 Dunn Circle, Sparks, NV 89431
775-352-2716 FAX: 755-358-8127
JENSENMETALTECH.COM

©2026 Jensen Infrastructure - All rights reserved.
All materials appearing as Jensen Infrastructure documents and the like are proprietary work product and are protected under U.S. copyright and other laws. Unless in conjunction with business conducted with Jensen Infrastructure , any use of Jensen Infrastructure work product without express, written consent is prohibited, and recipient is prohibited from distributing any and all work product to non-approved third parties under penalty of civil action.
This product shall only be produced in a Jensen Infrastructure facility.

NAME & DESCRIPTION: 200069902 Frame Component Leveling Angle		REV: D-3-2
WEIGHT: 26.203 lbmass	DRAWN BY: R. Dohr	SHEET: 21 OF 25
CREATED: 9/20/2022	MODIFIED: 2/3/2026	

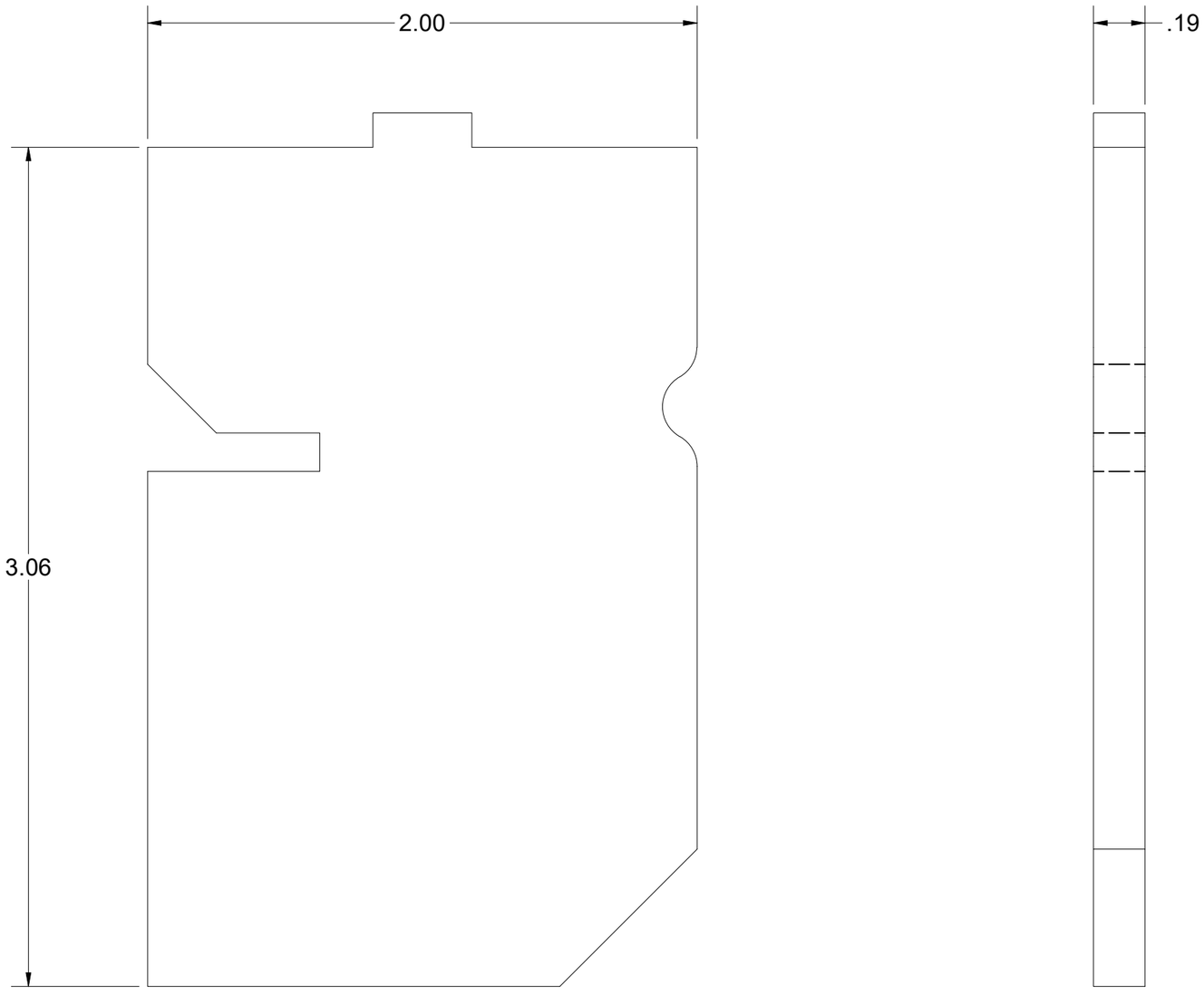

100005480.idw

BEND TABLE				MATERIAL IFS: 100007734
BEND RADIUS	V-OPENING	BEND ANGLE	BEND DEDUCTION	MATERIAL THK: 0.1875
-	-	-	-	MAT DESCRIPTION: STL ASTM A36 SM-HRPO 60X120 RAW .1875

Infrastructure
JENSEN
527 Dunn Circle, Sparks, NV 89431
775-352-2716 FAX: 755-358-8127
JENSENMETALTECH.COM

©2026 Jensen Infrastructure - All rights reserved.
All materials appearing as Jensen Infrastructure documents and the like are proprietary work product and are protected under U.S. copyright and other laws. Unless in conjunction with business conducted with Jensen Infrastructure , any use of Jensen Infrastructure work product without express, written consent is prohibited, and recipient is prohibited from distributing any and all work product to non-approved third parties under penalty of civil action.
This product shall only be produced in a Jensen Infrastructure facility.

NAME & DESCRIPTION:	200069158 STANDOFF SIDEWALL	REV:
WEIGHT: 0.313 lbmass	DRAWN BY: R. Dohr	SHEET: 22 OF 25
CREATED: 9/20/2022	MODIFIED: 2/3/2026	

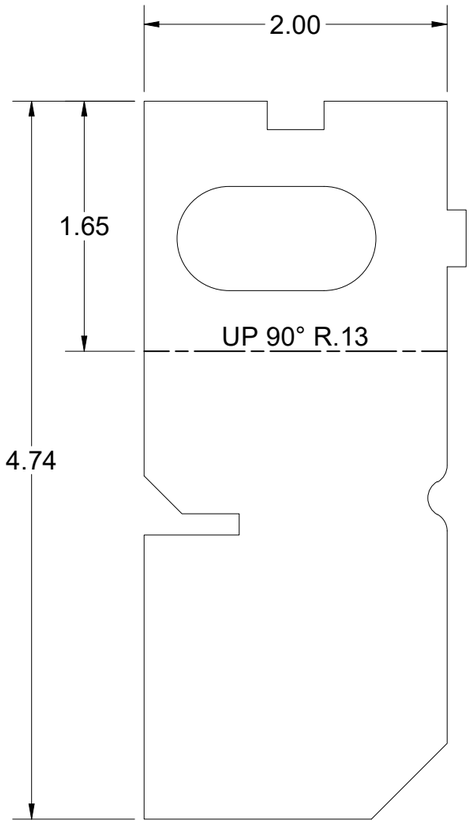

ASYMMETRIC

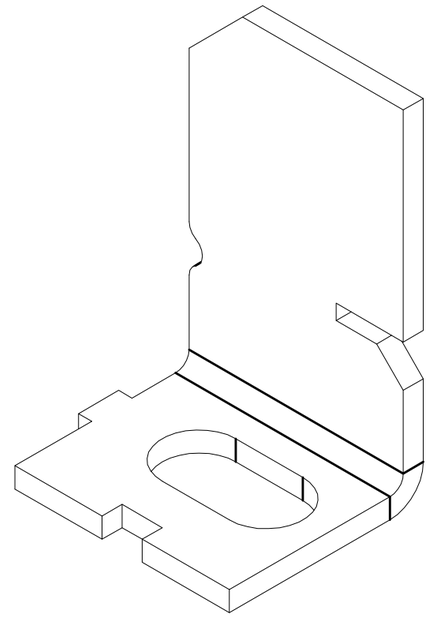

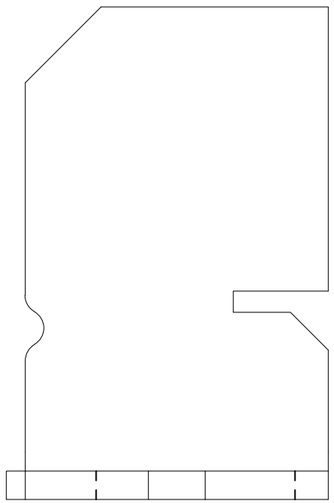

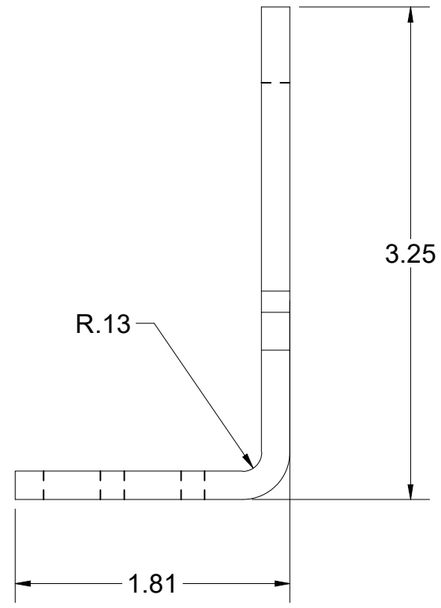

BEND TABLE				MATERIAL IFS: 100007734
BEND RADIUS	V-OPENING	BEND ANGLE	BEND DEDUCTION	MATERIAL THK: 0.1875
0.125	1	90	0.3250	MAT DESCRIPTION: STL ASTM A36 SM-HRPO 60X120 RAW .1875

Infrastructure
JENSEN
527 Dunn Circle, Sparks, NV 89431
775-352-2716 FAX: 755-358-8127
JENSENMETALTECH.COM

©2026 Jensen Infrastructure - All rights reserved.
All materials appearing as Jensen Infrastructure documents and the like are proprietary work product and are protected under U.S. copyright and other laws. Unless in conjunction with business conducted with Jensen Infrastructure , any use of Jensen Infrastructure work product without express, written consent is prohibited, and recipient is prohibited from distributing any and all work product to non-approved third parties under penalty of civil action.
This product shall only be produced in a Jensen Infrastructure facility.

NAME & DESCRIPTION: 200069159 SQUARE NUT BRACKET-CUSTOM PG&E FVT		REV: D-3-2
WEIGHT: 0.450 lbmass	DRAWN BY: R. Dohr	SHEET: 23 OF 25
CREATED: 9/20/2022	MODIFIED: 2/3/2026	

100005480.idw

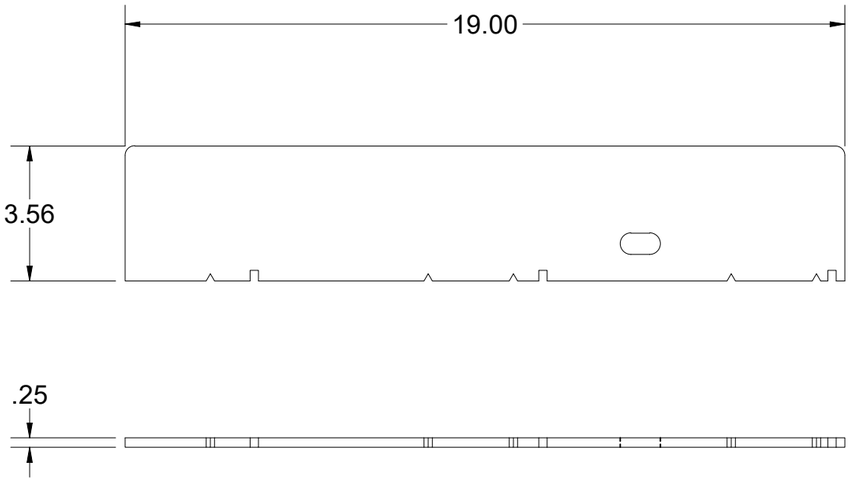

BEND TABLE				MATERIAL IFS: 100007735			
BEND RADIUS	V-OPENING	BEND ANGLE	BEND DEDUCTION	MATERIAL THK: 0.25			
-	-	-	-	MAT DESCRIPTION: STL ASTM A36 SM-HRPO RAW .250			

Infrastructure
JENSEN
527 Dunn Circle, Sparks, NV 89431
775-352-2716 FAX: 755-358-8127
JENSENMETALTECH.COM

©2026 Jensen Infrastructure - All rights reserved.
All materials appearing as Jensen Infrastructure documents and the like are proprietary work product and are protected under U.S. copyright and other laws. Unless in conjunction with business conducted with Jensen Infrastructure , any use of Jensen Infrastructure work product without express, written consent is prohibited, and recipient is prohibited from distributing any and all work product to non-approved third parties under penalty of civil action.
This product shall only be produced in a Jensen Infrastructure facility.

NAME & DESCRIPTION: 200074065 Door Component Steel Side Bar		REV: D-3-2
WEIGHT: 4.745 lbmass	DRAWN BY: R. Dohr	SHEET: 24 OF 25
CREATED: 9/20/2022	MODIFIED: 2/3/2026	

100005480.idw

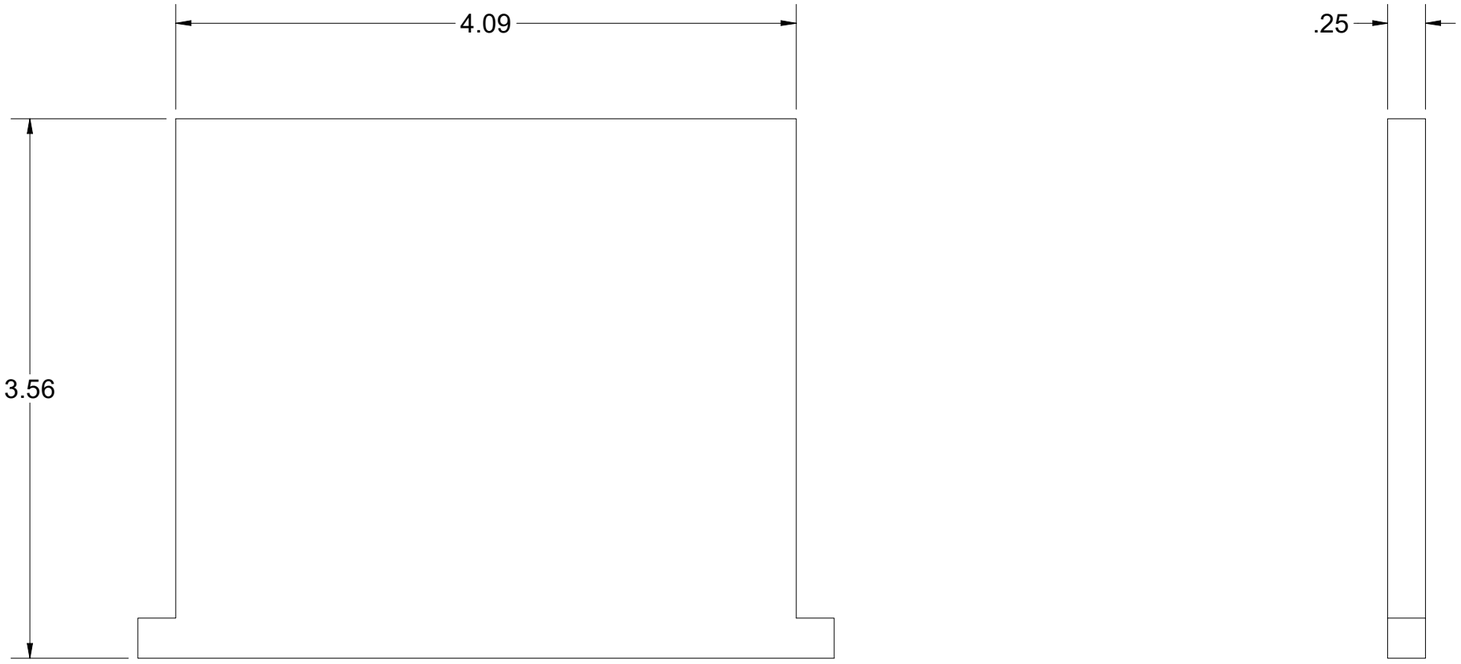

BEND TABLE				MATERIAL IFS: 100007735
BEND RADIUS	V-OPENING	BEND ANGLE	BEND DEDUCTION	MATERIAL THK: 0.25
-	-	-	-	MAT DESCRIPTION: STL ASTM A36 SM-HRPO RAW .250

Infrastructure
JENSEN
527 Dunn Circle, Sparks, NV 89431
775-352-2716 FAX: 755-358-8127
JENSENMETALTECH.COM

©2026 Jensen Infrastructure - All rights reserved.
All materials appearing as Jensen Infrastructure documents and the like are proprietary work product and are protected under U.S. copyright and other laws. Unless in conjunction with business conducted with Jensen Infrastructure , any use of Jensen Infrastructure work product without express, written consent is prohibited, and recipient is prohibited from distributing any and all work product to non-approved third parties under penalty of civil action.
This product shall only be produced in a Jensen Infrastructure facility.

NAME & DESCRIPTION: 200074066 Door Component Steel Offset Side Bar		REV: D-3-2
WEIGHT: 1.045 lbmass	DRAWN BY: R. Dohr	SHEET: 25 OF 25
CREATED: 9/20/2022	MODIFIED: 2/3/2026	

100005480.idw