NOTES
■ FOR COMPLETE DESIGN AND PRODUCT INFORMATION CONTACT JENSEN PRECAST.

BILL OF MATERIALS

ITEM	QTY	PART NUMBER	DESCRIPTION
1	42.601 ft^3	100011425	CONCRETE MIX GENERIC 5000 PSI
2	1	100006865	GRATE FRAME 4848-H STEEL SBF E0053G B/D TRF GALV
3	4	100004880	ANCHOR UTILITY .671DIA 5.625-SLAB GALV P75 6UA671
4	1	100020590	REINFORCING MAT 100020590

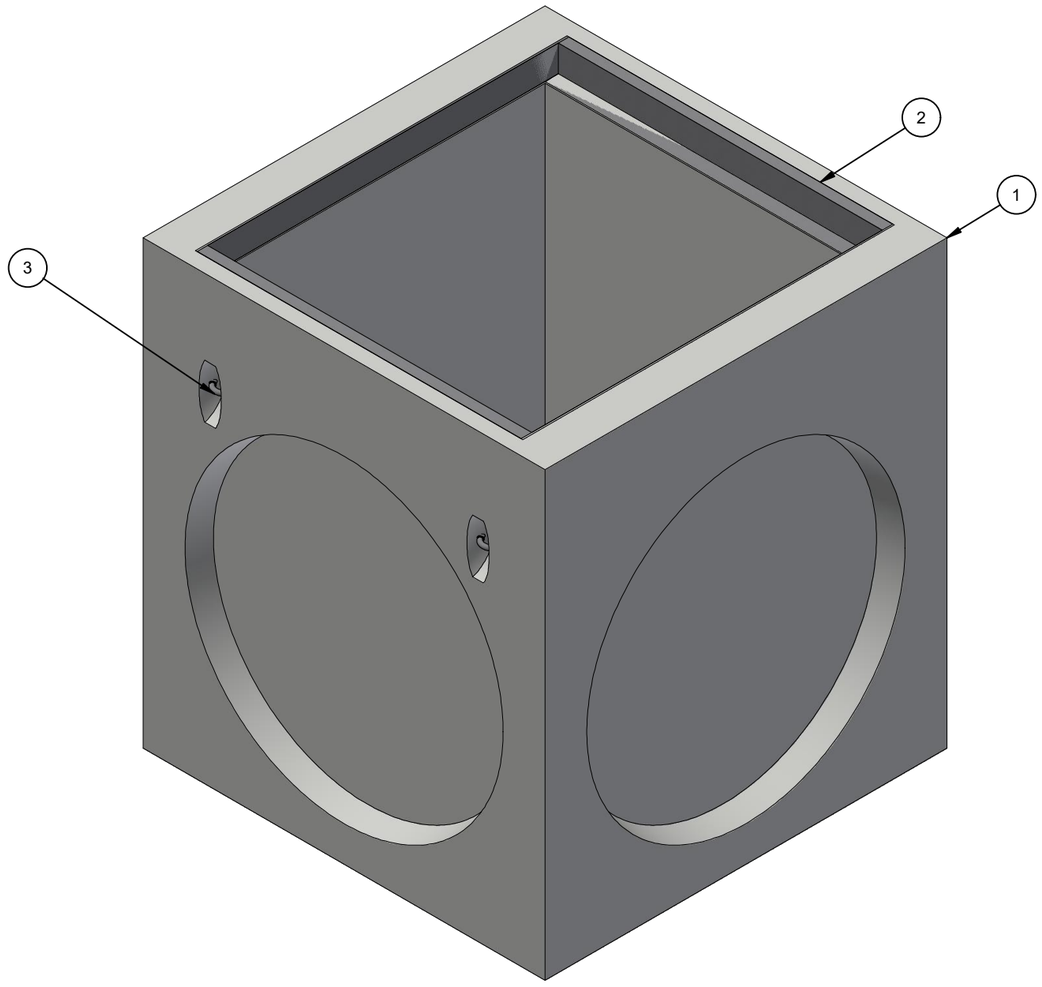

ISO LAYOUT

100005394.idw

LIFTING NOTES
■ PLANT DEMOLDING: MINIMUM HANDLING CONCRETE STRENGTH F'c = 2500 PSI RIGGING EQUALIZER REQUIRED TO EQUALIZE LOAD TO 4 LIFTING POINTS WITH A 60 DEGREE SLING ANGLE
■ PLANT INSTALLATION: MINIMUM HANDLING CONCRETE STRENGTH F'c = 2500 PSI RIGGING EQUALIZER REQUIRED TO EQUALIZE LOAD TO 2 LIFTING POINTS WITH A 60 DEGREE SLING ANGLE

CHANGE HISTORY			
NO.	DESCRIPTION	DATE	BY
A	DRAWING CREATED	12/2/2020	CMK
B	LIFTING UPDATED	6/23/2022	E.FINE

BURY DEPTH:	0.0' - 0.0' to Top		
WATER LEVEL:	5.0'	APPROX. WEIGHT:	6527.99 Lbs
DESIGN SPEC:	ASTM C890,ACI 318	LOADING SPEC:	A-16 (AASHTO HS20-44)
REINFORCEMENT TYPE:	Rebar	LIFTING TYPE:	A-Anchor

JENSEN PRECAST EST. 1968

WWW.JENSENPRECAST.COM

©2022 Jensen Precast- All rights reserved.
All materials appearing as Jensen Precast documents and the like are proprietary work product and are protected under U.S. copyright and other laws.
Unless in conjunction with business conducted with Jensen Precast, any use of Jensen Precast work product without express, written consent is prohibited, and recipient is prohibited from distributing any and all work product to non-approved third parties under penalty of civil action.

DESCRIPTION:
Drainage 4848x60 Rect. Bottom Section Knockout Cast-In Frame
CASTING LAYOUT

REV: C-1

PART NUMBER:	100005394	DRAWN BY:	E. Fine
CREATED:	10/13/2017	MODIFIED:	7/22/2022

SHEET: 1 OF 2

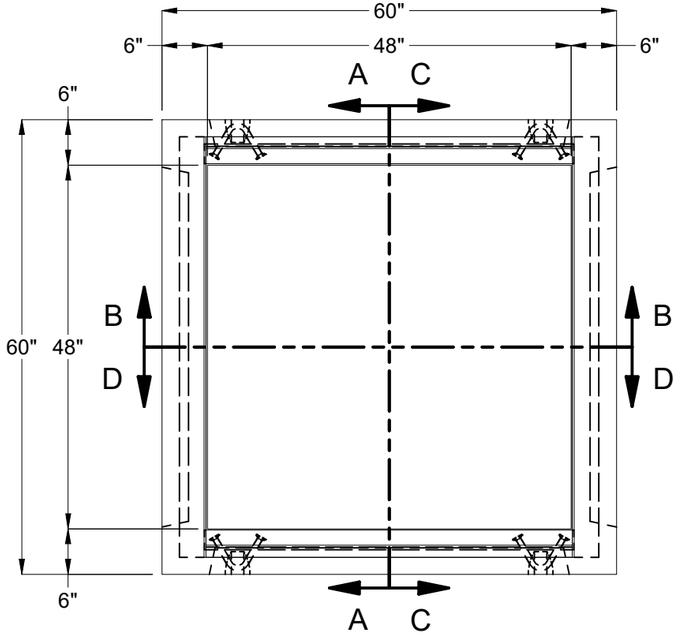

PLAN VIEW

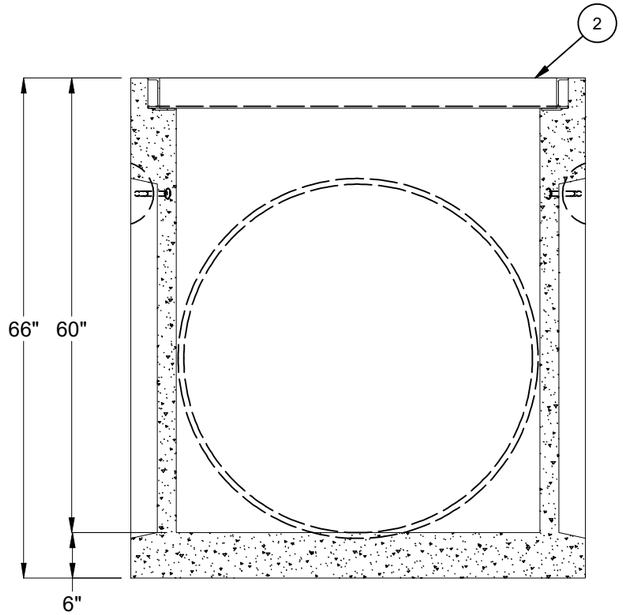

SECTION A-A

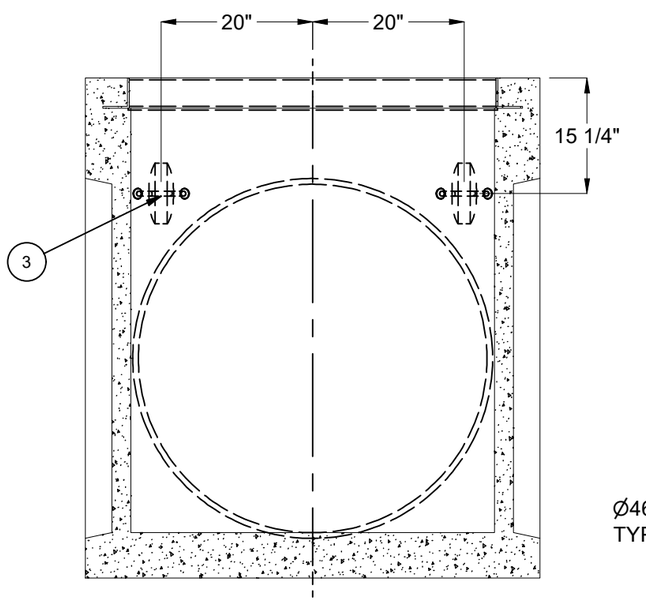

SECTION B-B

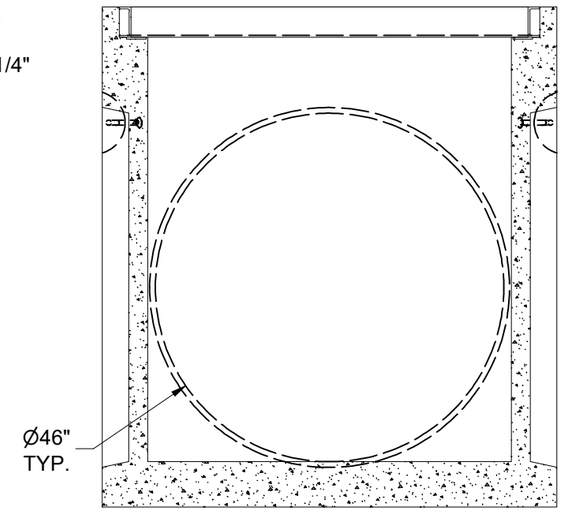

SECTION C-C

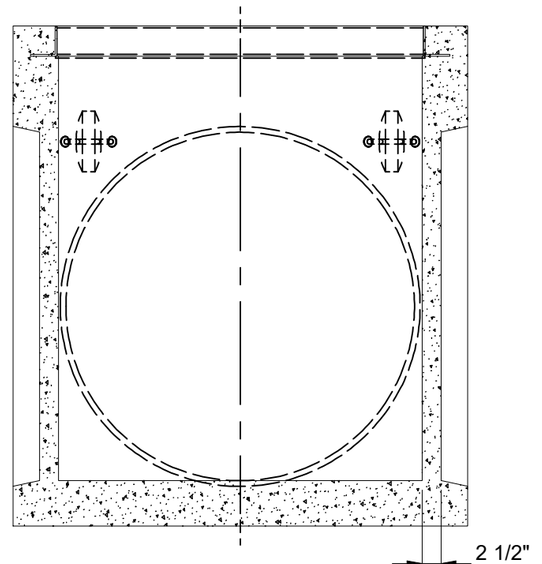

SECTION D-D

BURY DEPTH:	0.0' - 0.0' to Top		
WATER LEVEL:	5.0'	APPROX. WEIGHT:	6527.99 Lbs
DESIGN SPEC:	ASTM C890,ACI 318	LOADING SPEC:	A-16 (AASHTO HS20-44)
REINFORCEMENT TYPE:	Rebar	LIFTING TYPE:	A-Anchor

JENSEN PRECAST EST. 1968

WWW.JENSENPRECAST.COM

©2022 Jensen Precast- All rights reserved.
All materials appearing as Jensen Precast documents and the like are proprietary work product and are protected under U.S. copyright and other laws.
Unless in conjunction with business conducted with Jensen Precast, any use of Jensen Precast work product without express, written consent is prohibited, and recipient is prohibited from distributing any and all work product to non-approved third parties under penalty of civil action.

DESCRIPTION:	Drainage 4848x60 Rect. Bottom Section Knockout Cast-In Frame CASTING DRAWING		REV: C-1
PART NUMBER:	100005394	DRAWN BY:	E. Fine
CREATED:	10/13/2017	MODIFIED:	7/22/2022
			SHEET: 2 OF 2

100005394.idw