DESIGN NOTES:

- CONCRETE SHALL HAVE A 28 DAY MINIMUM COMPRESSIVE STRENGTH OF 4000 PSI
- SOIL UNIT WEIGHT DRY - 110 lbs/cu.ft.
- EQUIVALENT LATERAL PRESSURE DRY - 40 lbs/cu.ft.
- SOIL UNIT WEIGHT WET - 120 lbs/cu.ft.
- EQUIVALENT LATERAL PRESSURE WET - 80 lbs/cu.ft.

PRODUCTION NOTES:

- THIS PRODUCT SHALL ONLY BE PRODUCED IN A JENSEN PRECAST FACILITY
- LIFTING INSERTS SHALL BE INSTALLED PER MANUFACTURER'S REQUIREMENTS
- APPLIED FINISH - NONE
- INTERNAL LINER/COATING - NONE
- EXTERNAL LINER/COATING - NONE

BILL OF MATERIALS

ITEM	QTY	PART NUMBER	DESCRIPTION
1	7.289 ft^3	100002728	CONCRETE MIX GENERIC 4000 PSI
2	1	100003363	REINF HOOP STEEL .25235DIA GA ASTM A-1064 54.25DIA
3	1	100002392	REINF HOOP STEEL .25235DIA GA 42DIA
4	2	100002854	INSERT MH RUNG PLASTIC SP SOCKET



ISOMETRIC

LIFTING NOTES
■ THIS CONCRETE PRODUCT IS DESIGNED TO BE LIFTED AT 2500 PSI WITH 2 LIFT CONNECTIONS EQUALLY LOADED TO 2 LIFTING POINTS AT A MINIMUM 45° SLING ANGLE, MEASURED FROM HORIZONTAL.
*All rigging shall be design by a qualified professional. Loading diagrams show illustrations of possible rigging setups to achieve the required sling angle and load leg equalization. Other valid rigging configurations are possible. A qualified professional must be consulted prior to lifting.

RIGGING DIAGRAM*	F
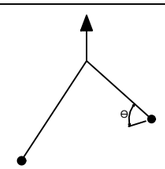	

BURY DEPTH:	0.0' - 2.0' to Top		
WATER LEVEL:	0.0'	APPROX. WEIGHT:	1099.81 Lbs
DESIGN SPEC:	ASTM C478	LOADING SPEC:	A-16 (AASHTO HS20-44)
REINFORCEMENT TYPE:	Plain Wire	LIFTING TYPE:	SP Socket

Infrastructure
JENSEN
WWW.JENSENINFRASTRUCTURE.COM

©2026 Jensen Infrastructure - All rights reserved.
All materials appearing as Jensen Infrastructure documents and the like are proprietary work product and are protected under U.S. copyright and other laws.
Unless in conjunction with business conducted with Jensen Infrastructure , any use of Jensen Infrastructure work product without express, written consent is prohibited, and recipient is prohibited from distributing any and all work product to non-approved third parties under penalty of civil action.
This product shall only be produced in a Jensen Infrastructure facility.

CHANGE HISTORY

NO.	DESCRIPTION	DATE	BY
A	INITIAL RELEASE	12/2/2024	J.R.
B	REPLACED 2 SP SOCKETS WITH 3 FERRULE LOOPS	4/3/26	AB
C	FERRULE LOOPS TO SP	11/5/26	AB

DESCRIPTION: Manhole Cone Concentric D4858 to D36x16IN TU CASTING LAYOUT				REV: A-3-3
PART NUMBER:	100005158	DRAWN BY:	J. Ramirez	SHEET: 1 OF 2
CREATED:	8/27/2020	MODIFIED:	11/5/2026	

100005158.idw

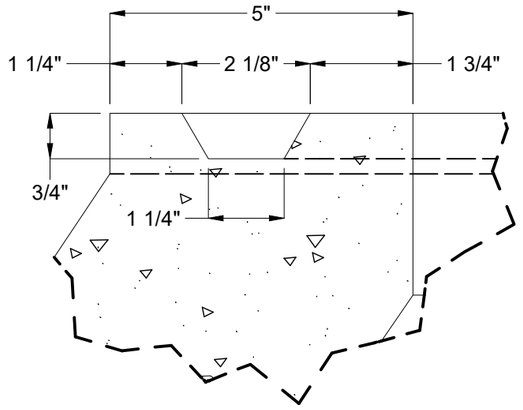

DETAIL B

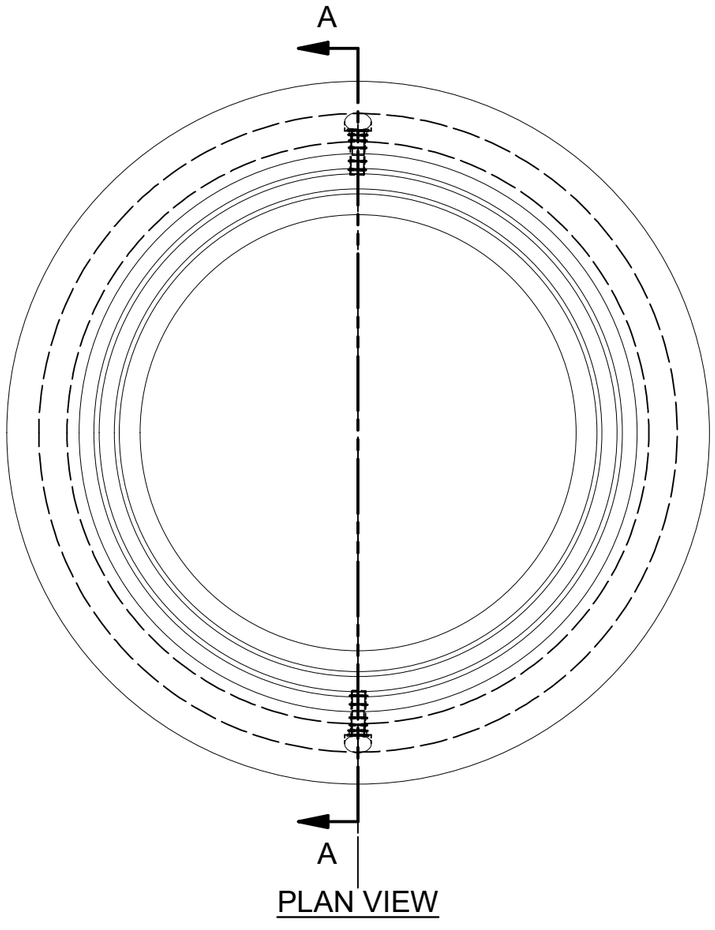

PLAN VIEW

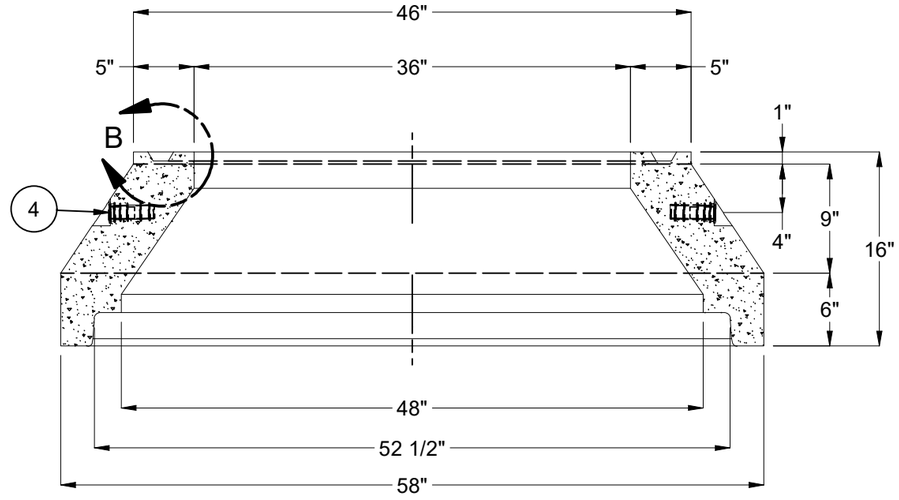

SECTION A-A

BURY DEPTH:	0.0' - 2.0' to Top		
WATER LEVEL:	0.0'	APPROX. WEIGHT:	1099.81 Lbs
DESIGN SPEC:	ASTM C478	LOADING SPEC:	A-16 (AASHTO HS20-44)
REINFORCEMENT TYPE:	Plain Wire	LIFTING TYPE:	SP Socket

Infrastructure
JENSEN
WWW.JENSENINFRASTRUCTURE.COM

©2026 Jensen Infrastructure - All rights reserved.
All materials appearing as Jensen Infrastructure documents and the like are proprietary work product and are protected under U.S. copyright and other laws.
Unless in conjunction with business conducted with Jensen Infrastructure , any use of Jensen Infrastructure work product without express, written consent is prohibited, and recipient is prohibited from distributing any and all work product to non-approved third parties under penalty of civil action.
This product shall only be produced in a Jensen Infrastructure facility.

DESCRIPTION:	Manhole Cone Concentric D4858 to D36x16IN TU CASTING DRAWING		REV: A-3-3
PART NUMBER:	100005158	DRAWN BY:	J. Ramirez
CREATED:	8/27/2020	MODIFIED:	11/5/2026
			SHEET: 2 OF 2

100005158.idw