DESIGN NOTES
■ DESIGNED IN ACCORDANCE WITH ASTM C478
■ FOR COMPLETE DESIGN AND PRODUCT INFORMATION CONTACT JENSEN PRECAST.

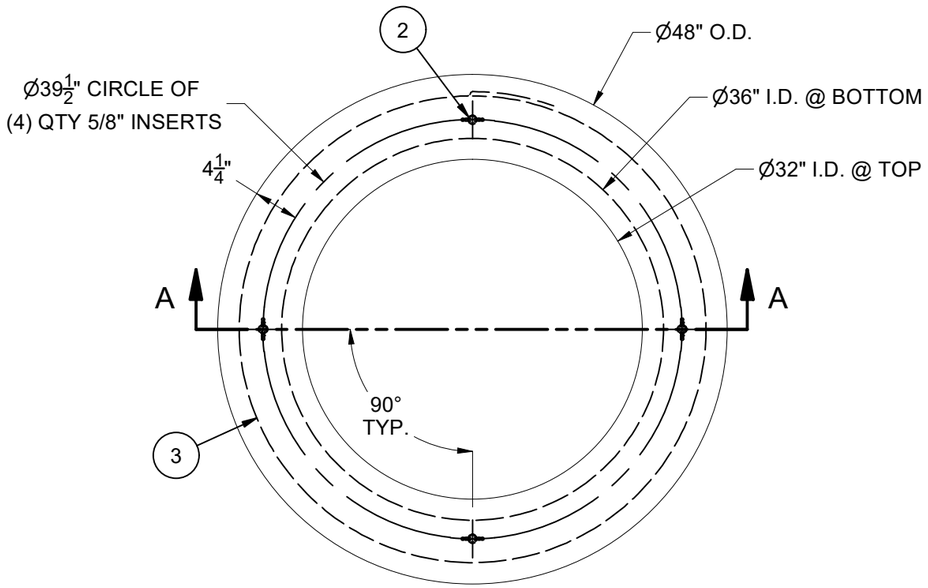

PLAN VIEW
(JOINT HIDDEN FOR CLARITY)

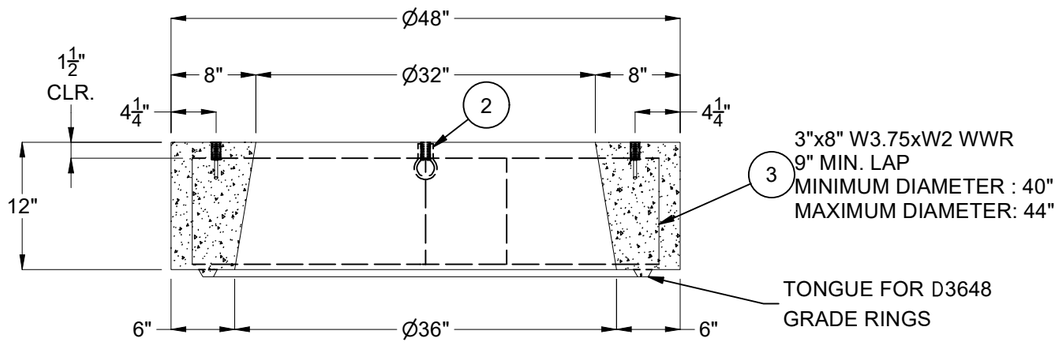

SECTION A-A

BILL OF MATERIALS				
ITEM	UNIT QTY	QTY	PART NUMBER	DESCRIPTION
1	6.322 ft^3	6.322 ft^3	100011428	CONCRETE MIX GENERIC 6500 PSI
2	1	4	100002766	INSERT FERRULE LOOP 5/8 X 3-1/2 PLATED FX-5
3	1	1	200048283	REINFORCING MAT 200048283

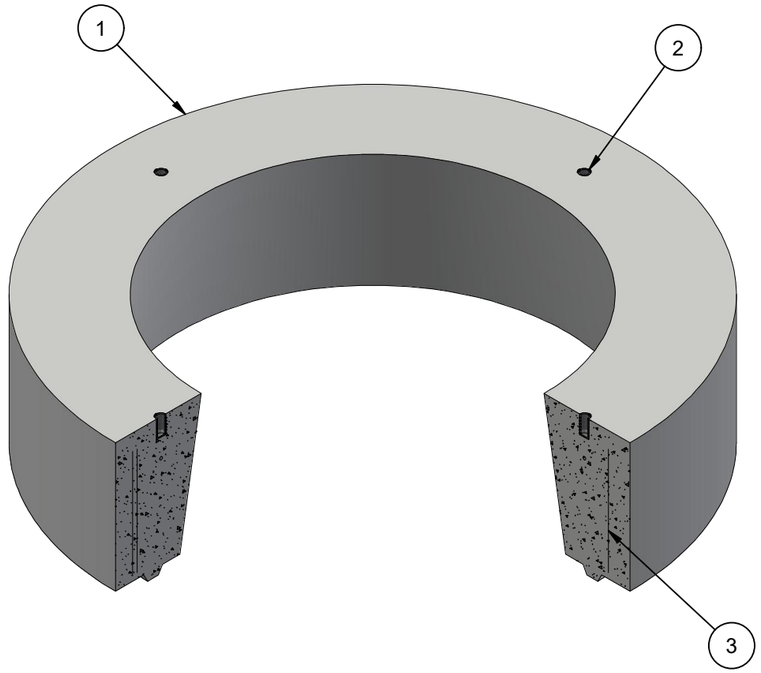

ISO SECTION VIEW

100005092.idw

LIFTING NOTES
■ THIS CONCRETE PRODUCT IS DESIGNED TO BE LIFTED AT 3000 PSI WITH 2 LIFT CONNECTIONS EQUALLY LOADED TO 2 LIFTING POINTS AT A MINIMUM 60° SLING ANGLE, MEASURED FROM HORIZONTAL.

BURY DEPTH:	0.3' - 30.0' to Top of Section		
WATER LEVEL:	0.0'	WEIGHT:	951.12 Lbs
DESIGN SPEC:	ASTM C478	LOADING SPEC:	N/A
AGENCY:	HECO	AGENCY SPEC:	CS9401-5

JENSEN PRECAST EST. 1968

WWW.JENSENPRECAST.COM

©2018 Jensen Precast- All rights reserved.
All materials appearing as Jensen Precast documents and the like are proprietary work product and are protected under U.S. copyright and other laws.
Unless in conjunction with business conducted with Jensen Precast, any use of Jensen Precast work product without express, written consent is prohibited, and recipient is prohibited from distributing any and all work product to non-approved third parties under penalty of civil action.

REVISION HISTORY			
REV	DESCRIPTION	DATE	APPROVED
B-1	INITIAL RELEASE	6/8/2018	
B	REVISE NOTES, ADD MESH ASSEMBLY	2/8/2021	

DESCRIPTION: Utility Vault Cone Concentric D3648 to D32 x 12IN Flat HECO CS9401-5 NC LAYOUT REVIEW				REV: B-1
PART NUMBER:	100005092	DRAWN BY:	B. McConnell	SHEET: 1 OF 1
CREATED:	10/2/2018	MODIFIED:	2/8/2021	