NOTES
■ FOR COMPLETE DESIGN AND PRODUCT INFORMATION CONTACT JENSEN PRECAST.

BILL OF MATERIALS

ITEM	UNIT QTY	QTY	PART NUMBER	DESCRIPTION
1	6.935 ft^3	6.935 ft^3	100006023	CONCRETE 6000 PSI DRYCAST
2	1	1	100019127	REINFORCING MAT 100019127

100004702.idw

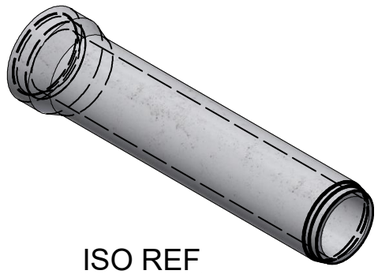

ISO REF



PLAN VIEW



BELL END

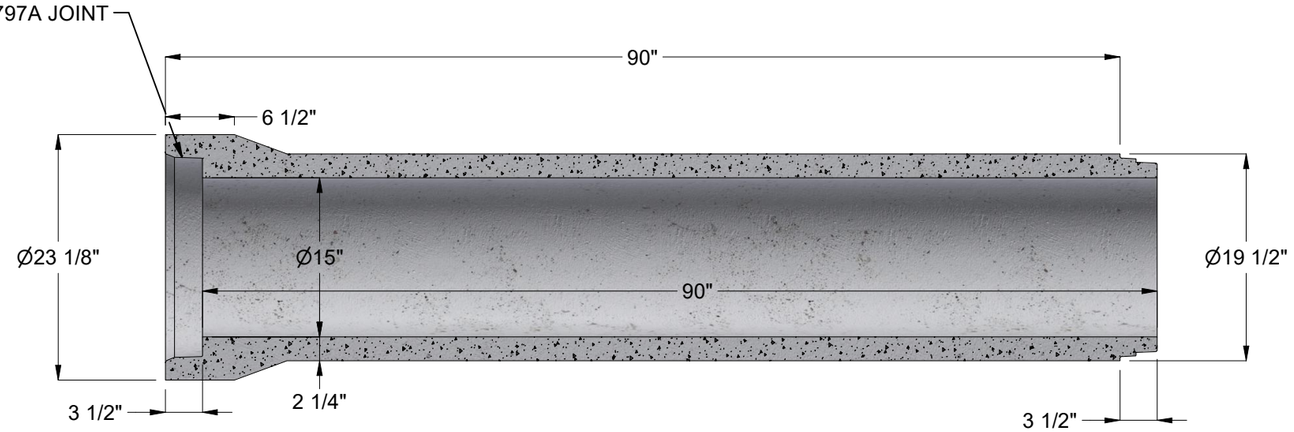

SECTION A-A



TONGUE END

CHANGE HISTORY			
NO.	DESCRIPTION	DATE	BY
1	2307-55549	7-18-23	JW

BURY DEPTH:	to		
WATER LEVEL:		APPROX. WEIGHT:	1042.27 Lbs
DESIGN SPEC:	ASTM C76/AASHTO M170	LOADING SPEC:	Class 5
REINFORCEMENT TYPE:	WWR Deformed	LIFTING TYPE:	None

JENSEN PRECAST EST. 1968

WWW.JENSENPRECAST.COM

©2023 Jensen Precast- All rights reserved.
All materials appearing as Jensen Precast documents and the like are proprietary work product and are protected under U.S. copyright and other laws.
Unless in conjunction with business conducted with Jensen Precast, any use of Jensen Precast work product without express, written consent is prohibited, and recipient is prohibited from distributing any and all work product to non-approved third parties under penalty of civil action.

DESCRIPTION:	RCP P15B Class 5 Bell - Spigot 90L CASTING LAYOUT		REV: B-2
PART NUMBER:	100004702	DRAWN BY:	J. Warren
CREATED:	4/12/2018	MODIFIED:	7/27/2023
			SHEET: 1 OF 1