NOTES
■ FOR COMPLETE DESIGN AND PRODUCT INFORMATION CONTACT JENSEN PRECAST.

BILL OF MATERIALS

ITEM	UNIT QTY	QTY	PART NUMBER	DESCRIPTION
1	11.035 ft^3	11.035 ft^3	100011425	CONCRETE MIX GENERIC 5000 PSI
2	1	1	200057443	REINFORCING MAT 200057443
3	1	3	100004878	ANCHOR UTILITY .671DIA 5-SLAB GALV P75 5UA671

ALTERNATE WWR REINFORCING OPTION	
PART NUMBER	DESCRIPTION
200069162	REINFORCING MAT 200069162

100004698.idw

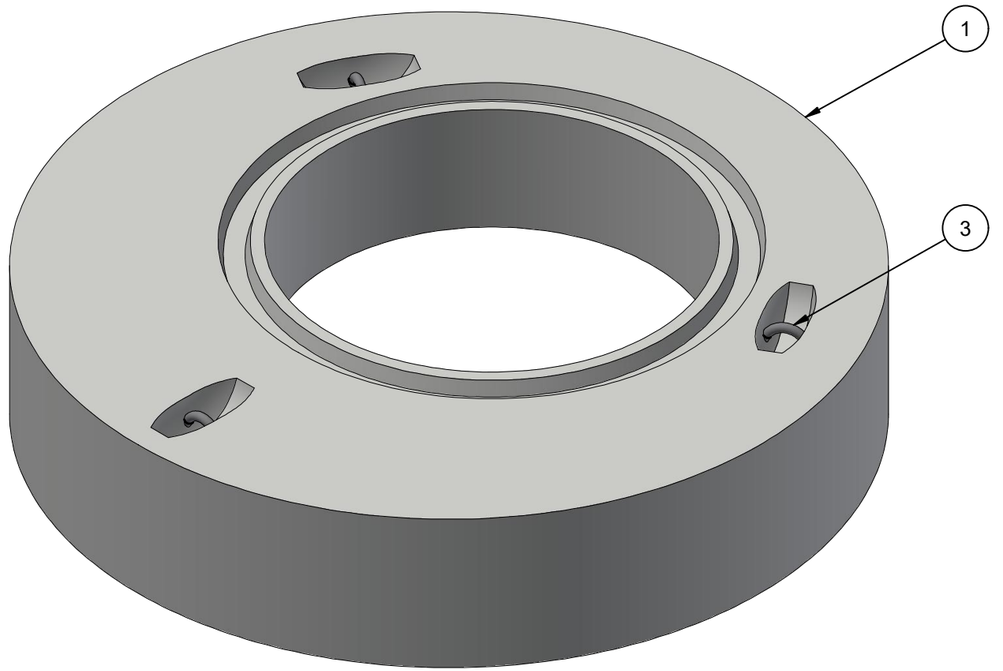

ISOMETRIC VIEW

LIFTING NOTES
■ THIS CONCRETE PRODUCT IS DESIGNED TO BE LIFTED AT 2500 PSI WITH 3 LIFT CONNECTIONS EQUALLY LOADED TO 3 LIFTING POINTS AT A MINIMUM 60° SLING ANGLE, MEASURED FROM HORIZONTAL.

BURY DEPTH:	0.0' - 5.0' to Top		
WATER LEVEL:	0.0'	WEIGHT:	1661.29 Lbs
DESIGN SPEC:	ASTM C890,ACI 318	LOADING SPEC:	A-16 (AASHTO HS20-44)
REINFORCEMENT TYPE:	Rebar	LIFTING TYPE:	A-Anchor

JENSEN PRECAST EST. 1968

WWW.JENSENPRECAST.COM

©2019 Jensen Precast- All rights reserved.
All materials appearing as Jensen Precast documents and the like are proprietary work product and are protected under U.S. copyright and other laws.
Unless in conjunction with business conducted with Jensen Precast, any use of Jensen Precast work product without express, written consent is prohibited, and recipient is prohibited from distributing any and all work product to non-approved third parties under penalty of civil action.

REVISION HISTORY			
REV	DESCRIPTION	DATE	BY
1	INITIAL RELEASE	10/06/2021	VGL

DESCRIPTION:	Manhole D4858x12 Flat Top TU 30"E CASTING LAYOUT		REV: A-4
PART NUMBER:	100004698	DRAWN BY: V. Lund	SHEET: 1 OF 2
CREATED:	10/6/2021	MODIFIED: 10/6/2022	

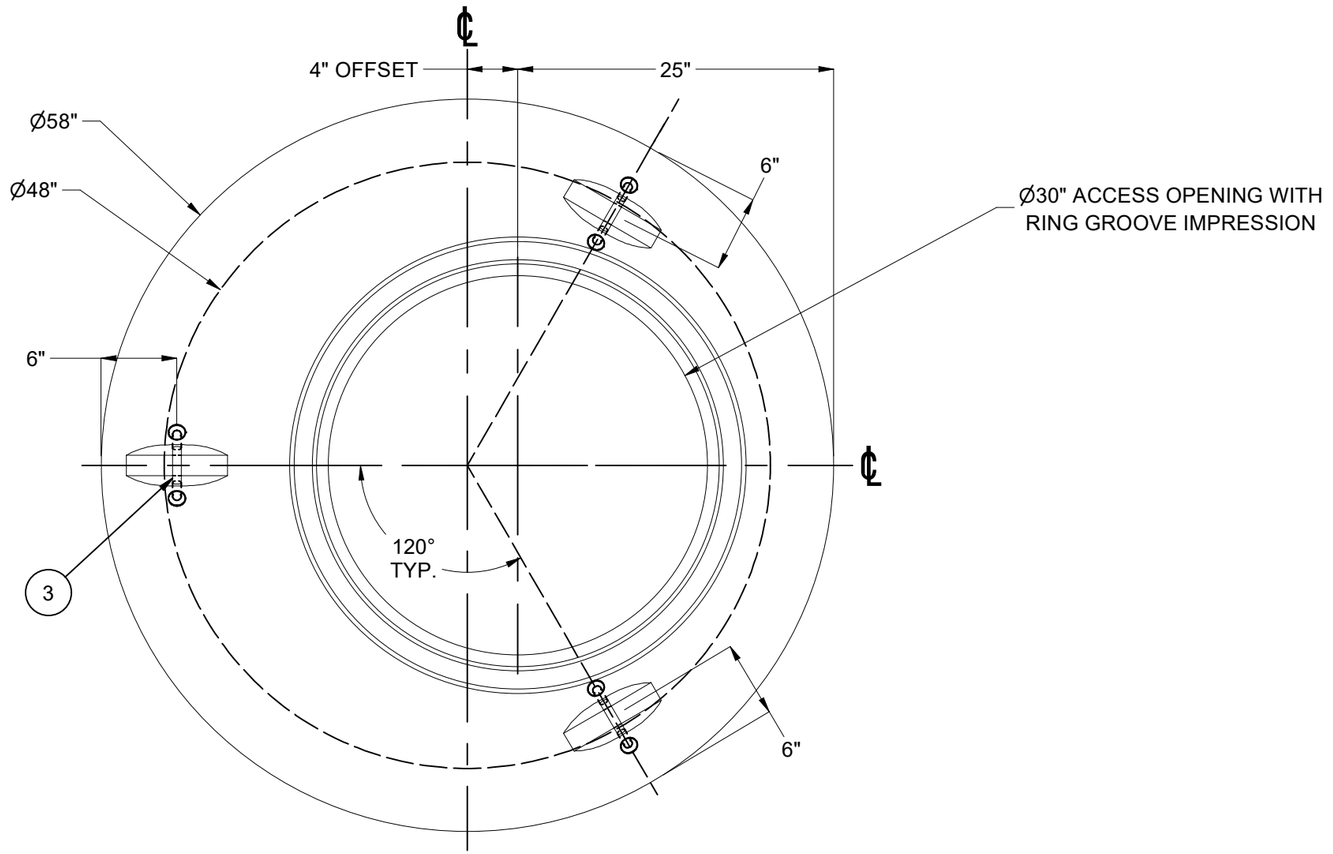

PLAN VIEW

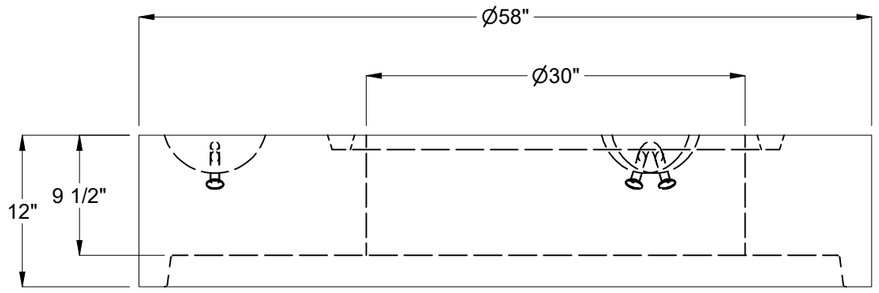

SECTION VIEW

BURY DEPTH:	0.0' - 5.0' to Top		
WATER LEVEL:	0.0'	WEIGHT:	1661.29 Lbs
DESIGN SPEC:	ASTM C890,ACI 318	LOADING SPEC:	A-16 (AASHTO HS20-44)
REINFORCEMENT TYPE:	Rebar	LIFTING TYPE:	A-Anchor

JENSEN PRECAST EST. 1968

WWW.JENSENPRECAST.COM

©2019 Jensen Precast- All rights reserved.
All materials appearing as Jensen Precast documents and the like are proprietary work product and are protected under U.S. copyright and other laws.
Unless in conjunction with business conducted with Jensen Precast, any use of Jensen Precast work product without express, written consent is prohibited, and recipient is prohibited from distributing any and all work product to non-approved third parties under penalty of civil action.

DESCRIPTION:	Manhole D4858x12 Flat Top TU 30"E CASTING DRAWING		REV: A-4
PART NUMBER:	100004698	DRAWN BY:	V. Lund
CREATED:	10/6/2021	MODIFIED:	10/6/2022
			SHEET: 2 OF 2

100004698.idw