NOTES
■ FOR COMPLETE DESIGN AND PRODUCT INFORMATION CONTACT JENSEN PRECAST.

BILL OF MATERIALS

ITEM	UNIT QTY	QTY	PART NUMBER	DESCRIPTION
1	15.505 ft^3	15.505 ft^3	100002728	CONCRETE MIX GENERIC 4000 PSI
2	1	1	100011244	REINF HOOP STEEL 53 DIA .25 WIRE DIA
3	1	1	100013808	REINF HOOP STEEL .25DIA GA ASTM A-1064 46DIA
4	1	1	100013809	REINF HOOP STEEL .25DIA GA ASTM A-1064 38DIA

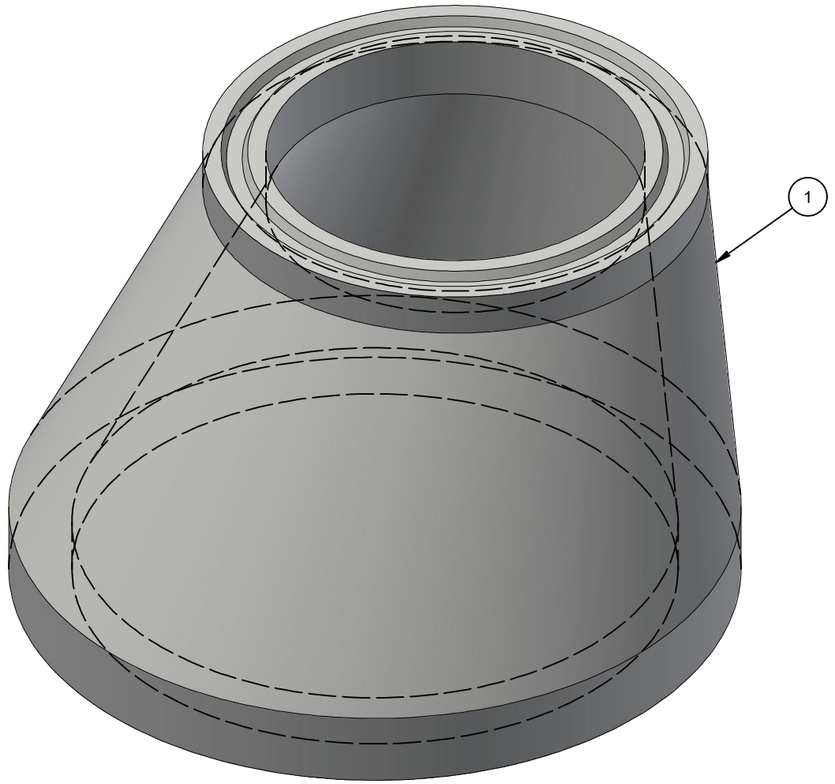

ISO VIEW

100004691.idw

CHANGE HISTORY			
NO.	DESCRIPTION	DATE	BY
1	2306-55518	8/30/23	MGL

BURY DEPTH:	0.0' - 99.0' to Top		
WATER LEVEL:	0.0'	APPROX. WEIGHT:	2336.06 Lbs
DESIGN SPEC:	AASHTO M199,ASTM C478	LOADING SPEC:	A-16 (AASHTO HS20-44)
REINFORCEMENT TYPE:	Plain Wire	LIFTING TYPE:	None

JENSEN PRECAST EST. 1968

WWW.JENSENPRECAST.COM

©2023 Jensen Precast- All rights reserved.
All materials appearing as Jensen Precast documents and the like are proprietary work product and are protected under U.S. copyright and other laws.
Unless in conjunction with business conducted with Jensen Precast, any use of Jensen Precast work product without express, written consent is prohibited, and recipient is prohibited from distributing any and all work product to non-approved third parties under penalty of civil action.

DESCRIPTION:	Dry Well Cone Eccentric D4858 to D30x36IN CASTING LAYOUT		REV: A-2
PART NUMBER:	100004691	DRAWN BY:	M. Lincoln
CREATED:	8/30/2023	MODIFIED:	9/13/2023
			SHEET: 1 OF 2

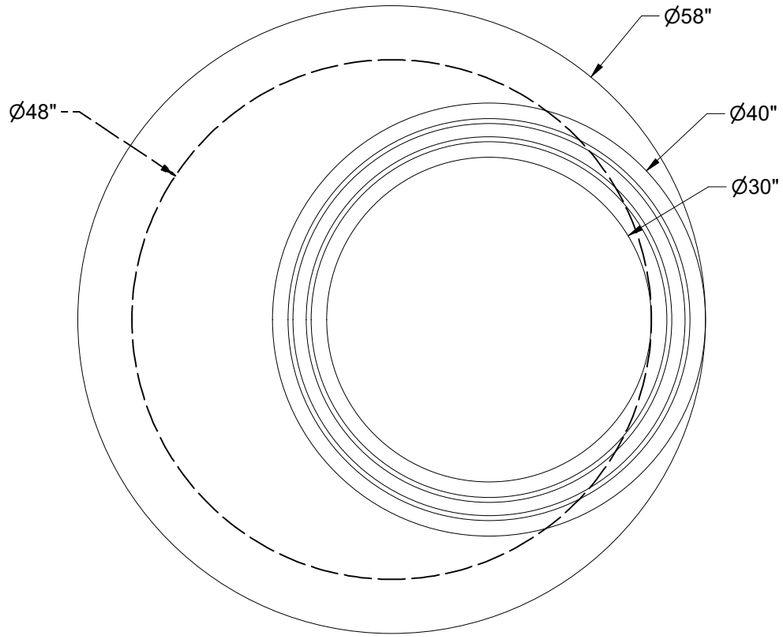

PLAN VIEW

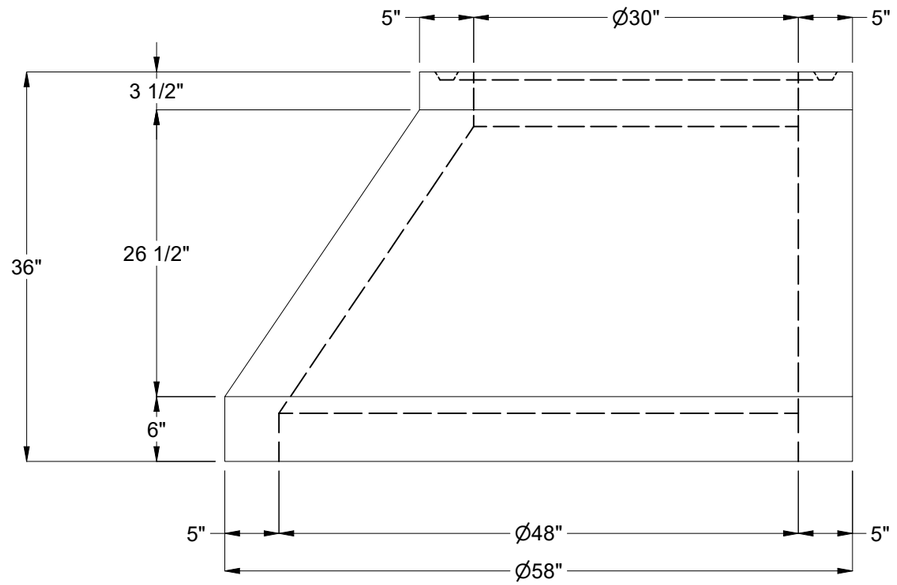

ELEVATION VIEW

BURY DEPTH:	0.0' - 99.0' to Top				
WATER LEVEL:	0.0'	APPROX. WEIGHT:	2336.06 Lbs		
DESIGN SPEC:	AASHTO M199,ASTM C478	LOADING SPEC:	A-16 (AASHTO HS20-44)		
REINFORCEMENT TYPE:	Plain Wire	LIFTING TYPE:	None		

JENSEN PRECAST EST. 1968

WWW.JENSENPRECAST.COM

©2023 Jensen Precast- All rights reserved.
All materials appearing as Jensen Precast documents and the like are proprietary work product and are protected under U.S. copyright and other laws.
Unless in conjunction with business conducted with Jensen Precast, any use of Jensen Precast work product without express, written consent is prohibited, and recipient is prohibited from distributing any and all work product to non-approved third parties under penalty of civil action.

DESCRIPTION:	Dry Well Cone Eccentric D4858 to D30x36IN CASTING DRAWING			REV: A-2
PART NUMBER:	100004691	DRAWN BY:	M. Lincoln	SHEET: 2 OF 2
CREATED:	8/30/2023	MODIFIED:	9/13/2023	

100004691.idw