NOTES
■ FOR COMPLETE DESIGN AND PRODUCT INFORMATION CONTACT JENSEN PRECAST.

BILL OF MATERIALS

ITEM	UNIT QTY	QTY	PART NUMBER	DESCRIPTION
1	15.116 ft^3	15.116 ft^3	100002728	CONCRETE MIX GENERIC 4000 PSI
2	1	1	100011244	REINF HOOP STEEL 53 DIA .25 WIRE DIA
3	1	1	100011239	REINF HOOP STEEL 42 DIA .250 WIRE DIA
4	1	1	100013810	REINF HOOP STEEL .25DIA GA ASTM A-1064 34DIA

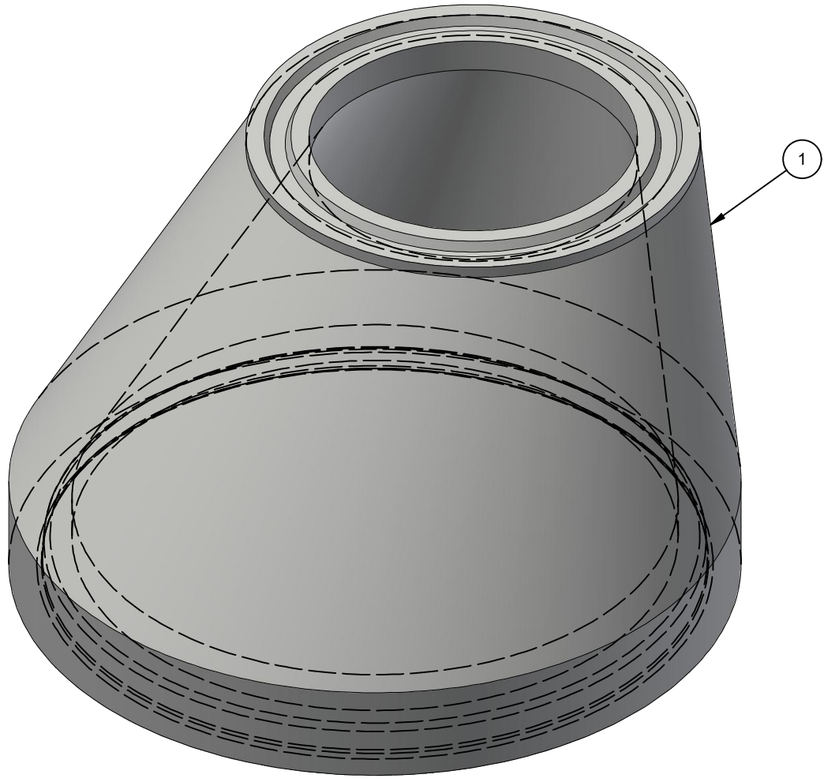

ISO VIEW

CHANGE HISTORY			
NO.	DESCRIPTION	DATE	BY
1	2306-55518	8/30/23	MGL

BURY DEPTH:	0.0' - 99.0' to Top		
WATER LEVEL:	0.0'	APPROX. WEIGHT:	2277.33 Lbs
DESIGN SPEC:	AASHTO M199,ASTM C478	LOADING SPEC:	A-16 (AASHTO HS20-44)
REINFORCEMENT TYPE:	Plain Wire	LIFTING TYPE:	None

JENSEN PRECAST EST. 1968

WWW.JENSENPRECAST.COM

©2023 Jensen Precast- All rights reserved.
All materials appearing as Jensen Precast documents and the like are proprietary work product and are protected under U.S. copyright and other laws.
Unless in conjunction with business conducted with Jensen Precast, any use of Jensen Precast work product without express, written consent is prohibited, and recipient is prohibited from distributing any and all work product to non-approved third parties under penalty of civil action.

DESCRIPTION:	Manhole Cone Eccentric D4858 to D26x36IN TU CASTING LAYOUT		REV: A-3
PART NUMBER:	100004654	DRAWN BY:	M. Lincoln
CREATED:	8/30/2023	MODIFIED:	9/12/2023
			SHEET: 1 OF 2

100004654.idw

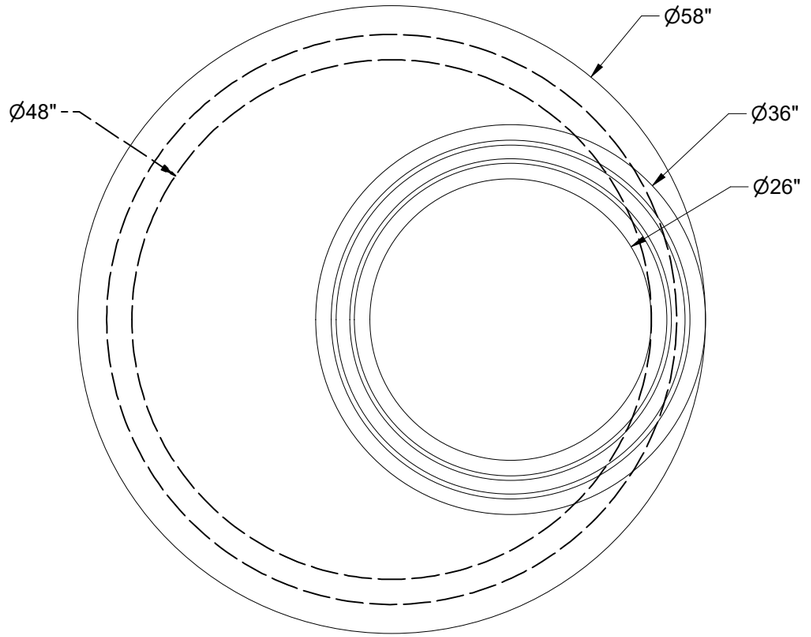

PLAN VIEW

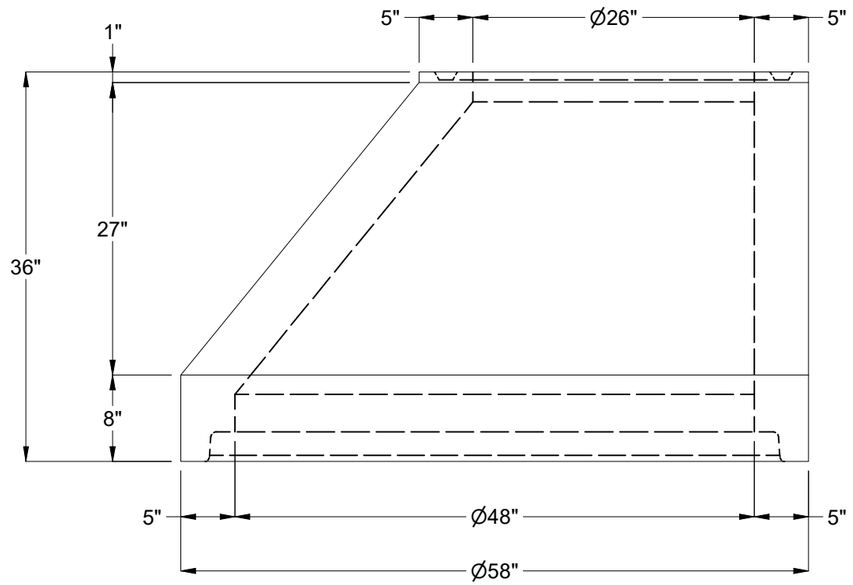

ELEVATION VIEW

BURY DEPTH:	0.0' - 99.0' to Top			DESCRIPTION: Manhole Cone Eccentric D4858 to D26x36IN TU CASTING DRAWING	REV: A-3
WATER LEVEL:	0.0'	APPROX. WEIGHT:	2277.33 Lbs		
DESIGN SPEC:	AASHTO M199,ASTM C478	LOADING SPEC:	A-16 (AASHTO HS20-44)		
REINFORCEMENT TYPE:	Plain Wire	LIFTING TYPE:	None	PART NUMBER: 100004654 / DRAWN BY: M. Lincoln / CREATED: 8/30/2023 / MODIFIED: 9/12/2023	SHEET: 2 OF 2

JENSEN PRECAST EST. 1968

WWW.JENSENPRECAST.COM

©2023 Jensen Precast- All rights reserved.
All materials appearing as Jensen Precast documents and the like are proprietary work product and are protected under U.S. copyright and other laws.
Unless in conjunction with business conducted with Jensen Precast, any use of Jensen Precast work product without express, written consent is prohibited, and recipient is prohibited from distributing any and all work product to non-approved third parties under penalty of civil action.

100004654.idw