NOTES
■ FOR COMPLETE DESIGN AND PRODUCT INFORMATION CONTACT JENSEN PRECAST.

BILL OF MATERIALS

ITEM	QTY	PART NUMBER	DESCRIPTION
1	6.564 ft^3	100011425	CONCRETE MIX GENERIC 5000 PSI
2	1	100018629	REINFORCING MAT 100018629
3	3	100004878	ANCHOR UTILITY .671DIA 5-SLAB GALV P75 5UA671

100004649.idw

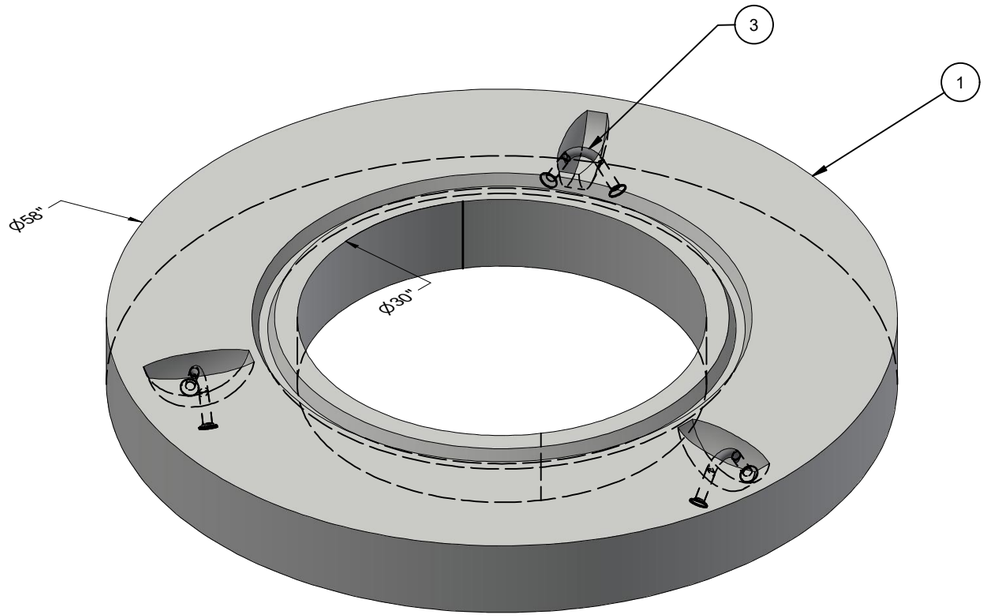

ISO VIEW

LIFTING NOTES
■ THIS CONCRETE PRODUCT IS DESIGNED TO BE LIFTED AT 2500PSI WITH 3 LIFT CONNECTIONS EQUALLY LOADED TO 3 LIFTING POINTS AT A MINIMUM 60° SLING ANGLE, MEASURED FROM HORIZONTAL.

BURY DEPTH:	0.0' - 5.0' to Top		
WATER LEVEL:	0.0'	APPROX. WEIGHT:	989.35 Lbs
DESIGN SPEC:	ACI 318,ASTM C890	LOADING SPEC:	A-16 (AASHTO HS20-44)
REINFORCEMENT TYPE:	Rebar	LIFTING TYPE:	A-Anchor

JENSEN PRECAST EST. 1968

WWW.JENSENPRECAST.COM

©2023 Jensen Precast- All rights reserved.
All materials appearing as Jensen Precast documents and the like are proprietary work product and are protected under U.S. copyright and other laws.
Unless in conjunction with business conducted with Jensen Precast, any use of Jensen Precast work product without express, written consent is prohibited, and recipient is prohibited from distributing any and all work product to non-approved third parties under penalty of civil action.

CHANGE HISTORY

NO.	DESCRIPTION	DATE	BY
1	2306-55518	9-14-23	JW

DESCRIPTION:	Manhole D4858x6 Flat Top Flat 30"C CASTING LAYOUT		REV: A-2
PART NUMBER:	100004649	DRAWN BY: MLR	SHEET: 1 OF 2
CREATED:	6/1/2021	MODIFIED: 9/15/2023	

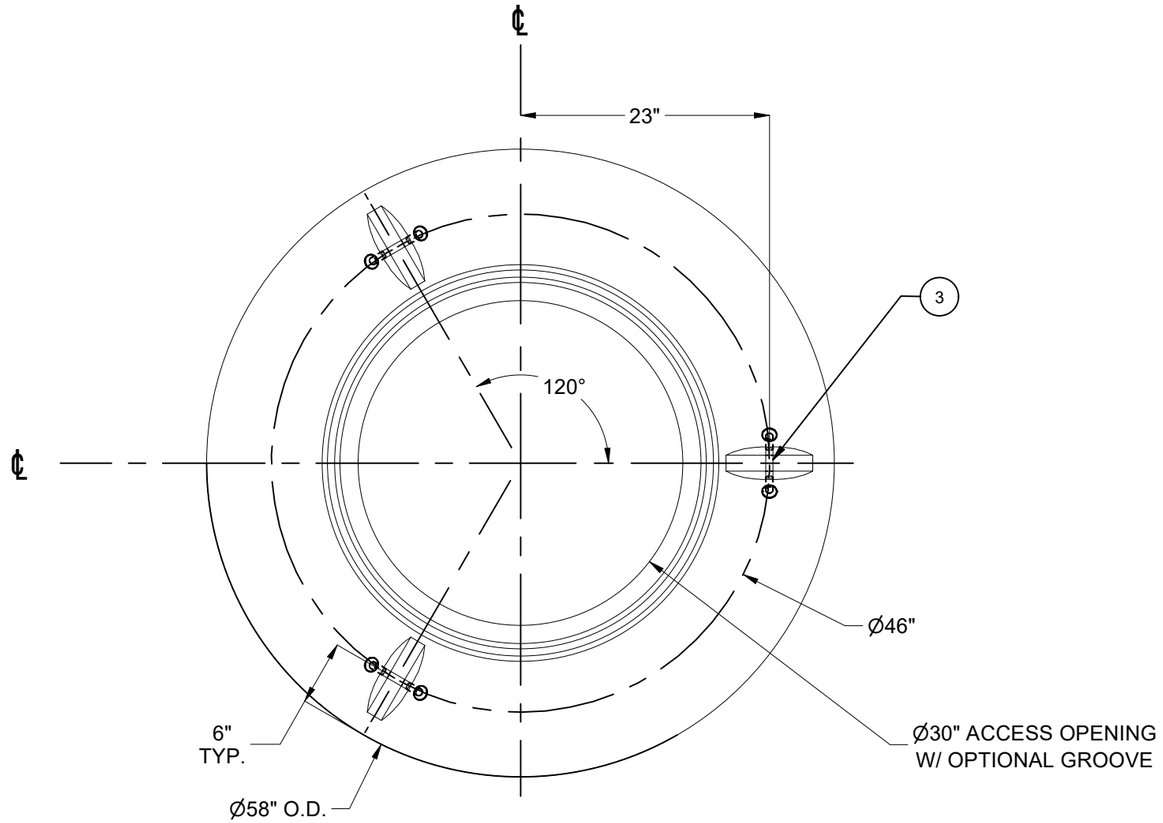

PLAN VIEW



ELEVATION VIEW

BURY DEPTH:	0.0' - 5.0' to Top		
WATER LEVEL:	0.0'	APPROX. WEIGHT:	989.35 Lbs
DESIGN SPEC:	ACI 318,ASTM C890	LOADING SPEC:	A-16 (AASHTO HS20-44)
REINFORCEMENT TYPE:	Rebar	LIFTING TYPE:	A-Anchor

JENSEN PRECAST EST. 1968

WWW.JENSENPRECAST.COM

©2023 Jensen Precast- All rights reserved.
All materials appearing as Jensen Precast documents and the like are proprietary work product and are protected under U.S. copyright and other laws.
Unless in conjunction with business conducted with Jensen Precast, any use of Jensen Precast work product without express, written consent is prohibited, and recipient is prohibited from distributing any and all work product to non-approved third parties under penalty of civil action.

DESCRIPTION:	Manhole D4858x6 Flat Top Flat 30"C CASTING DRAWING		REV: A-2
PART NUMBER:	100004649	DRAWN BY:	MLR
CREATED:	6/1/2021	MODIFIED:	9/15/2023
			SHEET: 2 OF 2

100004649.idw