NOTES
■ FOR COMPLETE DESIGN AND PRODUCT INFORMATION CONTACT JENSEN PRECAST.

BILL OF MATERIALS

ITEM	QTY	PART NUMBER	DESCRIPTION
1	2.331 ft^3	100002728	CONCRETE MIX GENERIC 4000 PSI
2	2	100038151	REINF HOOP STEEL .25DIA GA ASTM A-1064 40DIA
3	2	100038150	REINF HOOP STEEL .25DIA GA ASTM A-1064 32DIA

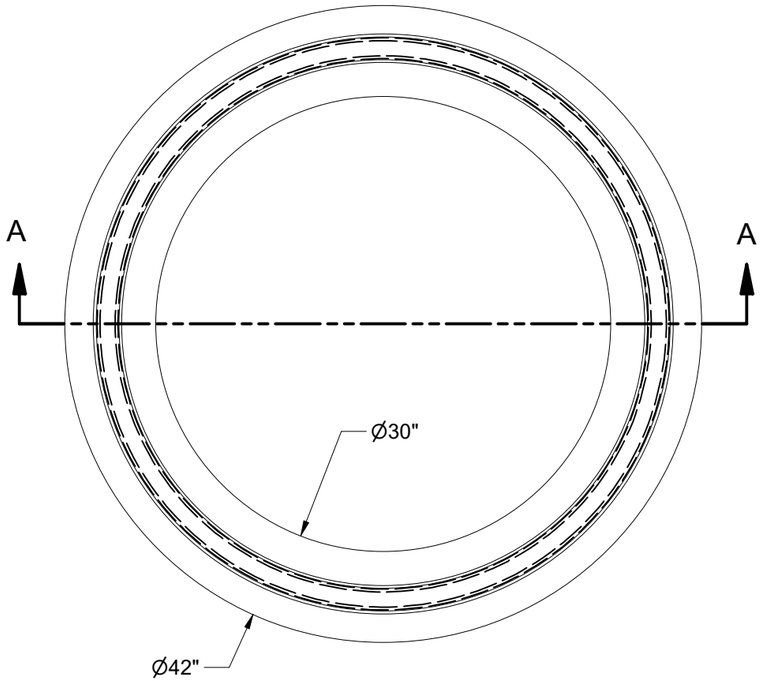

PLAN VIEW

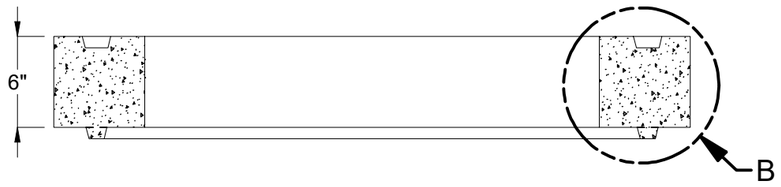

SECTION A-A

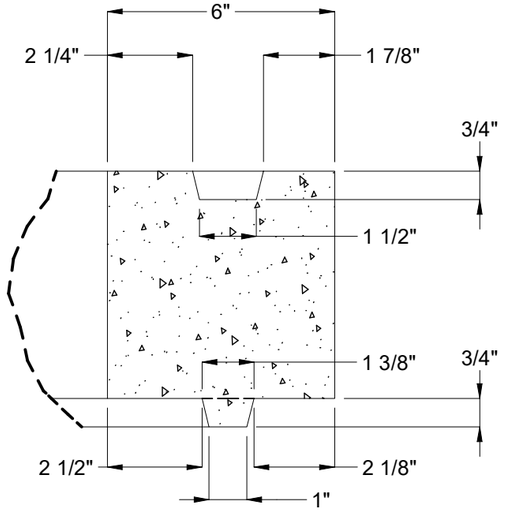

DETAIL B

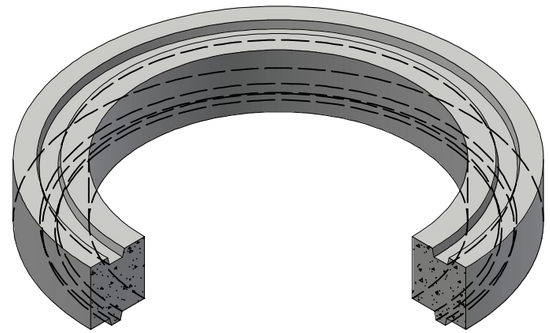

ISOMETRIC VIEW

LIFTING NOTES
■ THIS CONCRETE PRODUCT IS DESIGNED TO BE LIFTED AT 2000 PSI WITH GRADE RING LIFTING BAR.

BURY DEPTH:	0.0' - 10.0' to Top		
WATER LEVEL:	0.0'	APPROX. WEIGHT:	356.95 Lbs
DESIGN SPEC:	ASTM C478	LOADING SPEC:	A-16 (AASHTO HS20-44)
REINFORCEMENT TYPE:	Plain Wire	LIFTING TYPE:	None

JENSEN PRECAST EST. 1968

WWW.JENSENPRECAST.COM

©2023 Jensen Precast- All rights reserved.
All materials appearing as Jensen Precast documents and the like are proprietary work product and are protected under U.S. copyright and other laws.
Unless in conjunction with business conducted with Jensen Precast, any use of Jensen Precast work product without express, written consent is prohibited, and recipient is prohibited from distributing any and all work product to non-approved third parties under penalty of civil action.

CHANGE HISTORY			
NO.	DESCRIPTION	DATE	BY
2	2306-55518	11/8/23	MGL

DESCRIPTION:	Grade Ring D3042x6 Maricopa Assoc MAG 422 Casting Layout		REV: A-1
PART NUMBER:	100004570	DRAWN BY: M. Lincoln	SHEET: 1 OF 1
CREATED:	10/17/2016	MODIFIED: 11/8/2023	

100004570.idw