NOTES
■ FOR COMPLETE DESIGN AND PRODUCT INFORMATION CONTACT JENSEN PRECAST.

BILL OF MATERIALS

ITEM	QTY	PART NUMBER	DESCRIPTION
1	27.700 ft^3	100011425	CONCRETE MIX GENERIC 5000 PSI
2	16	100003014	TERMINATOR DUCT WITH SEAL 4.5IN OR 4.35IN T4351
3	16	100021260	TERMINATOR DUCT EXTENSION 4X1 TBE4X1
4	12	100012720	INSERT PLASTIC W/ BREAK OFF SNAP 0.5IN
5	4	100004658	PULL IRON OFFSET .875DIA 7.375IH X 9L X 13.75W GALV
6	4	100002527	CABLE RACK 18 HOLE GALV TABS
7	8	100013415	MACHINE BOLT 1/2-13 UNRC-2A 2IN HDG
8	8	100008814	WASHER FLAT 1/2 REGULAR TYPE A GALV
9	4	100007235	ANCHOR UTILITY .444DIA 4-SLAB GALV P75 4UA444
10	1	300126737	REINFORCING MAT 300126737

100004520.idw

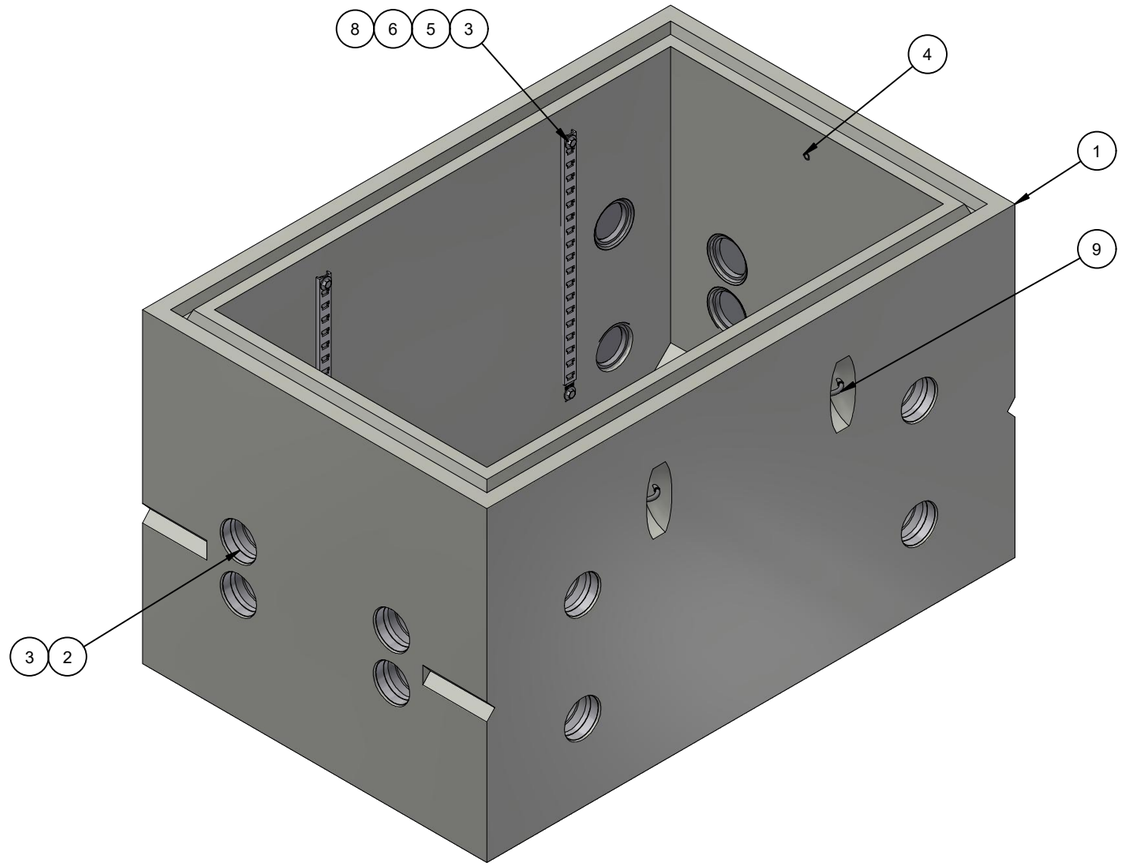

ISO LAYOUT

LIFTING NOTES
■ THIS CONCRETE PRODUCT IS DESIGNED TO BE LIFTED AT 2500 PSI WITH 4 LIFT CONNECTIONS EQUALLY LOADED TO 2 LIFTING POINTS AT A MINIMUM 60° SLING ANGLE, MEASURED FROM HORIZONTAL.

BURY DEPTH:	0.0' - 1.5' to Top		
WATER LEVEL:	3.5'	APPROX. WEIGHT:	4176.33 Lbs
DESIGN SPEC:	ASTM C857,ACI 318	LOADING SPEC:	A-16 (AASHTO HS20-44)
REINFORCEMENT TYPE:	Rebar	LIFTING TYPE:	A-Anchor

JENSEN PRECAST EST. 1968

WWW.JENSENPRECAST.COM

©2022 Jensen Precast- All rights reserved.
All materials appearing as Jensen Precast documents and the like are proprietary work product and are protected under U.S. copyright and other laws.
Unless in conjunction with business conducted with Jensen Precast, any use of Jensen Precast work product without express, written consent is prohibited, and recipient is prohibited from distributing any and all work product to non-approved third parties under penalty of civil action.

REVISION HISTORY			
REV	DESCRIPTION	DATE	BY
A	LEGACY DESIGN		
B	DRAWING CREATED	7/8/2020	MRV
C	LIFTING UPDATED	9/15/2022	E.FINE

DESCRIPTION:	Vault 3660x36 Rect. Bottom Section Terminators Sump AT&T CASTING LAYOUT		REV: C-1
PART NUMBER:	100004520	DRAWN BY: E. Fine	SHEET: 1 OF 2
CREATED:	4/19/2018	MODIFIED: 9/15/2022	

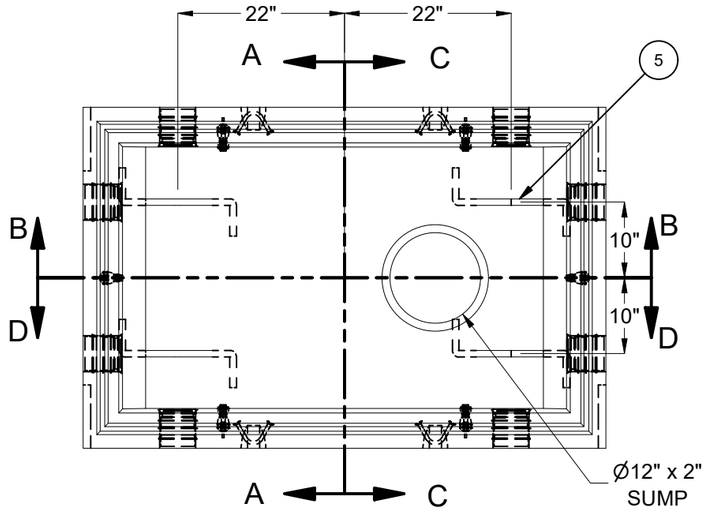

PLAN VIEW

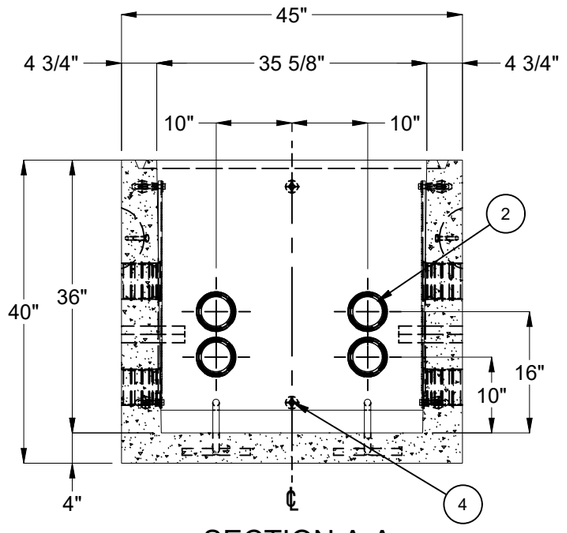

SECTION A-A

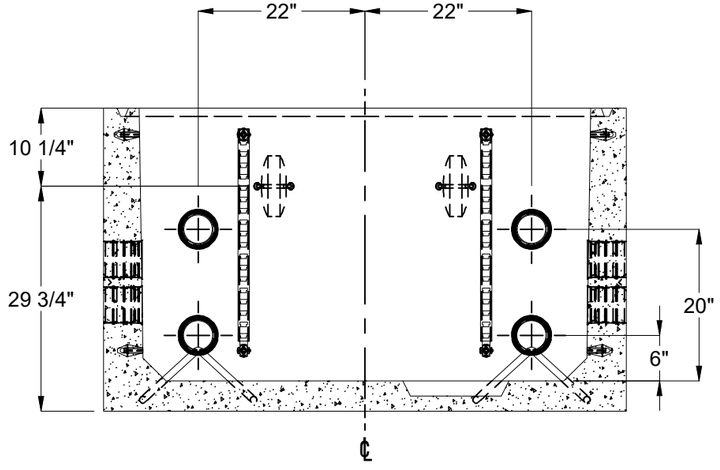

SECTION B-B

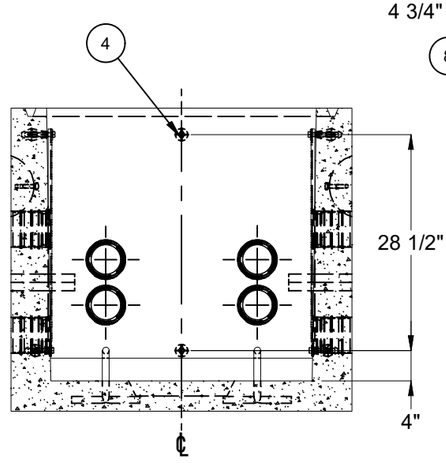

SECTION C-C

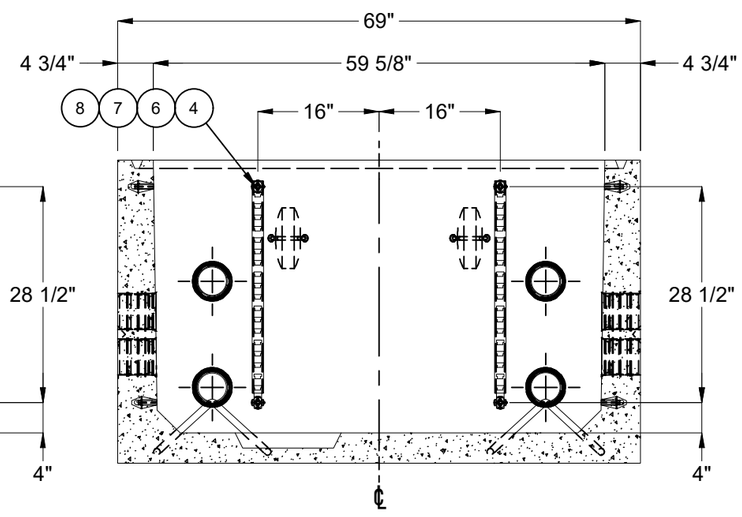

SECTION D-D

BURY DEPTH:	0.0' - 1.5' to Top		
WATER LEVEL:	3.5'	APPROX. WEIGHT:	4176.33 Lbs
DESIGN SPEC:	ASTM C857,ACI 318	LOADING SPEC:	A-16 (AASHTO HS20-44)
REINFORCEMENT TYPE:	Rebar	LIFTING TYPE:	A-Anchor

JENSEN PRECAST EST. 1968

WWW.JENSENPRECAST.COM

©2022 Jensen Precast- All rights reserved.
All materials appearing as Jensen Precast documents and the like are proprietary work product and are protected under U.S. copyright and other laws.
Unless in conjunction with business conducted with Jensen Precast, any use of Jensen Precast work product without express, written consent is prohibited, and recipient is prohibited from distributing any and all work product to non-approved third parties under penalty of civil action.

DESCRIPTION:	Vault 3660x36 Rect. Bottom Section Terminators Sump AT&T CASTING DRAWING		REV: C-1
PART NUMBER:	100004520	DRAWN BY:	E. Fine
CREATED:	4/19/2018	MODIFIED:	9/15/2022
			SHEET: 2 OF 2

100004520.idw