**DESIGN NOTES:**

- CONCRETE SHALL HAVE A 28 DAY MINIMUM COMPRESSIVE STRENGTH OF 5000 PSI
- SOIL UNIT WEIGHT DRY - 110 lbs/cu.ft.
- EQUIVALENT LATERAL PRESSURE DRY - 40 lbs/cu.ft.
- SOIL UNIT WEIGHT WET - 120 lbs/cu.ft.
- EQUIVALENT LATERAL PRESSURE WET - 80 lbs/cu.ft.

**PRODUCTION NOTES:**

- LIFTING INSERTS SHALL BE INSTALLED PER MANUFACTURER'S REQUIREMENTS
- APPLIED FINISH - BROOMED
- INTERNAL LINER/COATING - NONE
- EXTERNAL LINER/COATING - NONE

## BILL OF MATERIALS

| ITEM | UNIT QTY | QTY | PART NUMBER | DESCRIPTION |
|---|---|---|---|---|
| 1 | 1 | 1 | 100005870 | CI OUTER RING 24DIA B-5285-R1 ASTM A-48 CL35B |
| 2 | 9.022 ft^3 | 9.022 ft^3 | 100011425 | CONCRETE MIX GENERIC 5000 PSI |
| 3 | 1 | 4 | 100002854 | INSERT MH RUNG PLASTIC SP SOCKET |
| 4 | 1 | 1 | 100020583 | REINFORCING MAT 100020583 |
| 5 | 1 | 1 | 100007403 | CURB ANGLE 60 |
| 6 | 1 | 2 | 100002765 | Insert Ferrule Loop 0.5 x 2.75" Zinc (F42 or Equiv.) |

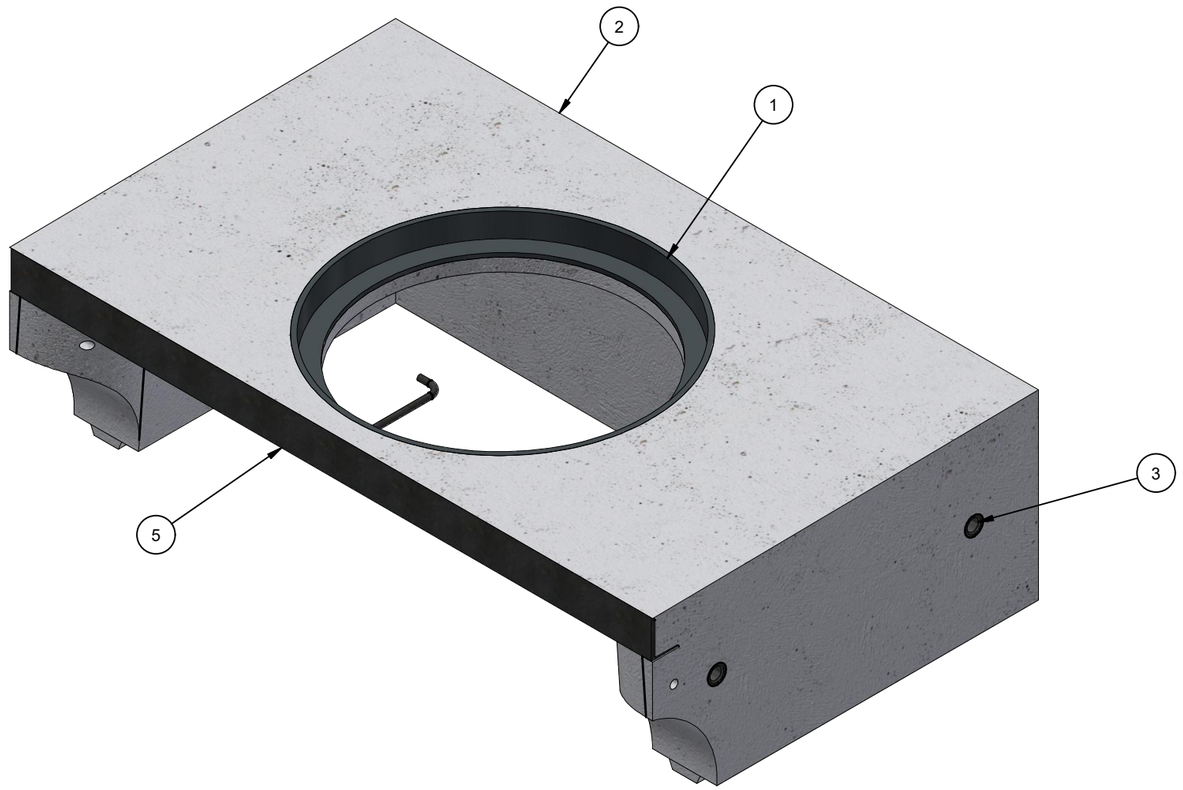


ISOMETRIC VIEW

100004517.idw

| LIFTING NOTES |
|---|
| ■ THIS CONCRETE PRODUCT IS DESIGNED TO BE LIFTED AT 3000 PSI WITH 4 LIFT CONNECTIONS EQUALLY LOADED TO 2 LIFTING POINTS AT A MINIMUM 60° SLING ANGLE, MEASURED FROM HORIZONTAL. |
| *All rigging shall be design by a qualified professional. Loading diagrams show illustrations of possible rigging setups to achieve the required sling angle and load leg equalization. Other valid rigging configurations are possible. A qualified professional must be consulted prior to lifting. |

| RIGGING DIAGRAM* | B |
|---|---|

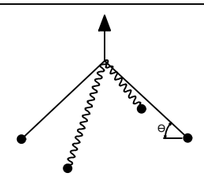


| | | | |
|---|---|---|---|
| BURY DEPTH: | 0.0' - 0.0' to Top | | |
| WATER LEVEL: | Below Structure | APPROX. WEIGHT: | 1426.47 Lbs |
| DESIGN SPEC: | ACI 318,ASTM C890 | LOADING SPEC: | A-02 (200 psf) |
| REINFORCEMENT TYPE: | Rebar | LIFTING TYPE: | SP Socket |

Infrastructure
JENSEN
WWW.JENSENINFRASTRUCTURE.COM

©2026 Jensen Infrastructure - All rights reserved.
All materials appearing as Jensen Infrastructure documents and the like are proprietary work product and are protected under U.S. copyright and other laws.
Unless in conjunction with business conducted with Jensen Infrastructure , any use of Jensen Infrastructure work product without express, written consent is prohibited, and recipient is prohibited from distributing any and all work product to non-approved third parties under penalty of civil action.
This product shall only be produced in a Jensen Infrastructure facility.

CHANGE HISTORY

| NO. | DESCRIPTION | DATE | BY |
|---|---|---|---|
| 1 | INITIAL RELEASE | 10/22/2024 | APS |
| 2 | ADDED FERRULE LOOPS | 6/19/26 | AB |
| 3 | UPDATED DIMENSIONS TO MATCH FORM | 10/19/2026 | J.R. |

| | | | |
|---|---|---|---|
| DESCRIPTION: | Curb Inlet 2448x17 Rect. Top Section 24"C Opening<br>CASTING LAYOUT | | REV: A-1-2 |
| PART NUMBER: | 100004517 | DRAWN BY: | A.Sprung |
| CREATED: | 10/22/2024 | MODIFIED: | 10/19/2026 |
| | | | SHEET: 1 OF 2 |

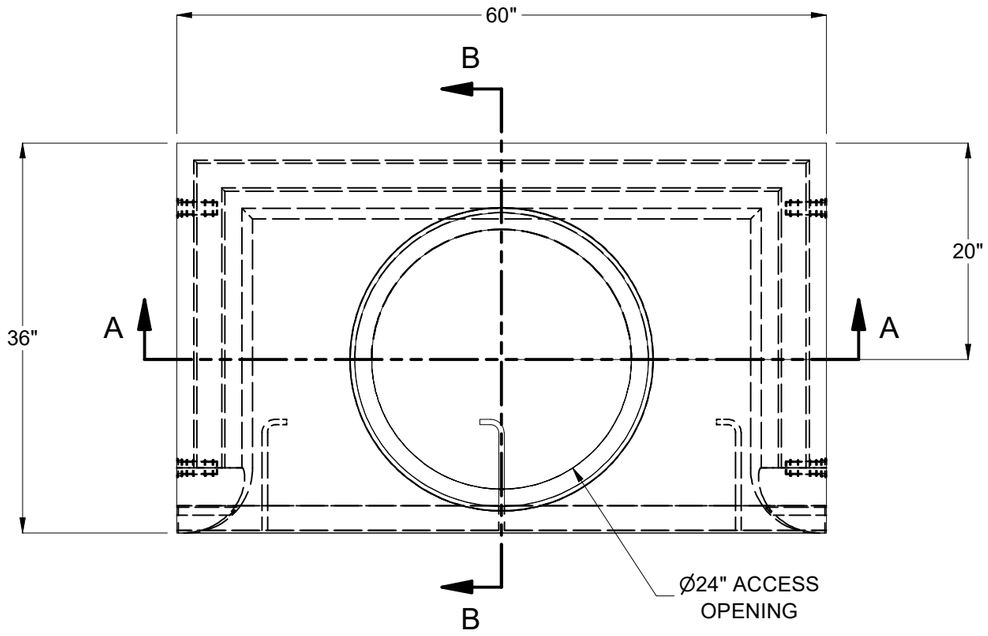


PLAN VIEW

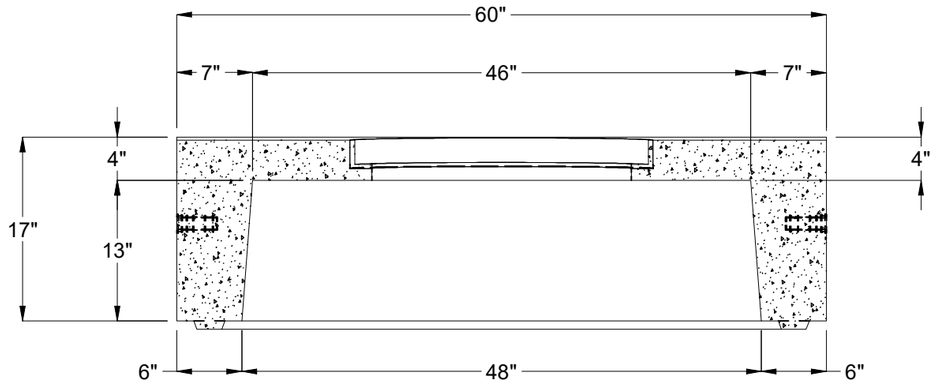


SECTION A-A

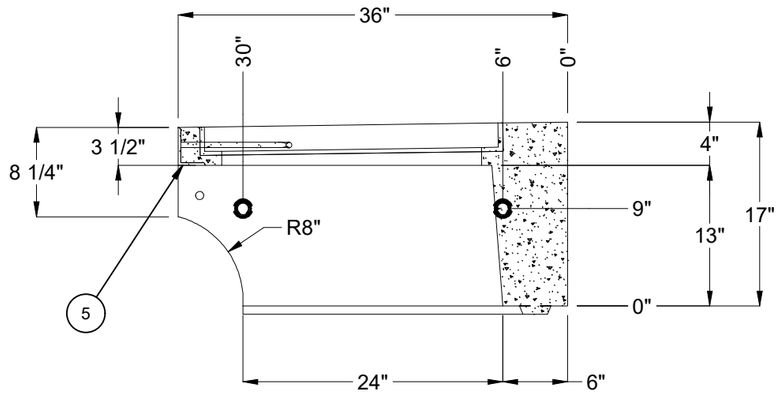


SECTION B-B

| | | | |
|---|---|---|---|
| BURY DEPTH: | 0.0' - 0.0' to Top | | |
| WATER LEVEL: | Below Structure | APPROX. WEIGHT: | 1426.47 Lbs |
| DESIGN SPEC: | ACI 318,ASTM C890 | LOADING SPEC: | A-02 (200 psf) |
| REINFORCEMENT TYPE: | Rebar | LIFTING TYPE: | SP Socket |

Infrastructure
JENSEN
WWW.JENSENINFRASTRUCTURE.COM

©2026 Jensen Infrastructure - All rights reserved.
All materials appearing as Jensen Infrastructure documents and the like are proprietary work product and are protected under U.S. copyright and other laws.
Unless in conjunction with business conducted with Jensen Infrastructure , any use of Jensen Infrastructure work product without express, written consent is prohibited, and recipient is prohibited from distributing any and all work product to non-approved third parties under penalty of civil action.
This product shall only be produced in a Jensen Infrastructure facility.

| | | | |
|---|---|---|---|
| DESCRIPTION: | Curb Inlet 2448x17 Rect. Top Section 24"C Opening<br>CASTING DRAWING | | REV: A-1-2 |
| PART NUMBER: | 100004517 | DRAWN BY: | A.Sprung |
| CREATED: | 10/22/2024 | MODIFIED: | 10/19/2026 |
| | | | SHEET: 2 OF 2 |

100004517.idw