NOTES
■ FOR COMPLETE DESIGN AND PRODUCT INFORMATION CONTACT JENSEN PRECAST.

BILL OF MATERIALS

ITEM	UNIT QTY	QTY	PART NUMBER	DESCRIPTION
1	3.819 ft^3	3.819 ft^3	100011425	CONCRETE MIX GENERIC 5000 PSI
2	1	4	100002765	Insert Ferrule Loop 0.5 x 2.75" Zinc (F42 or Equiv.)
3	1	2	100018993	REINFORCING MAT 100018993

100004510.idw

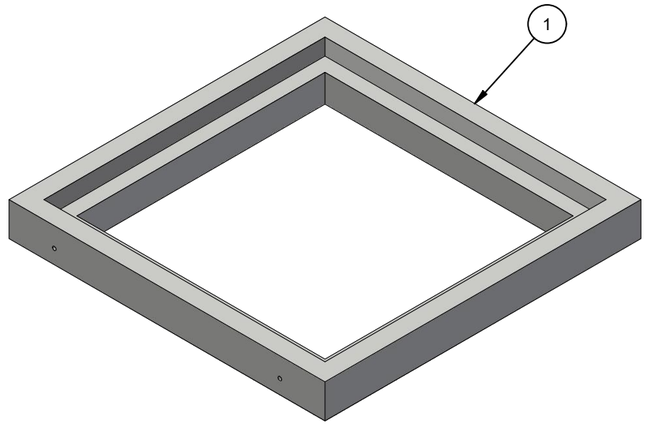

ISO VIEW

LIFTING NOTES
■ THIS CONCRETE PRODUCT IS DESIGNED TO BE LIFTED AT 3000 PSI WITH 4 LIFT CONNECTIONS EQUALLY LOADED TO 4 LIFTING POINTS AT A MINIMUM 90° SLING ANGLE, MEASURED FROM HORIZONTAL.

CHANGE HISTORY			
NO.	DESCRIPTION	DATE	BY
1	2301-54720 - UPDATE TO LEGACY PART	1/17/2023	JW

BURY DEPTH:	0.5' - 2.5' to Top		
WATER LEVEL:	5.0'	APPROX. WEIGHT:	574.55 Lbs
DESIGN SPEC:	ACI 318,ASTM C857	LOADING SPEC:	A-16 (AASHTO HS20-44)
REINFORCEMENT TYPE:	Rebar	LIFTING TYPE:	Insert

JENSEN PRECAST EST. 1968

WWW.JENSENPRECAST.COM

©2023 Jensen Precast- All rights reserved.
All materials appearing as Jensen Precast documents and the like are proprietary work product and are protected under U.S. copyright and other laws.
Unless in conjunction with business conducted with Jensen Precast, any use of Jensen Precast work product without express, written consent is prohibited, and recipient is prohibited from distributing any and all work product to non-approved third parties under penalty of civil action.

DESCRIPTION:	UV 5050X06 RISER 3W RS504 CASTING LAYOUT		REV: A-1
PART NUMBER:	100004510	DRAWN BY:	J. Warren
CREATED:	7/5/2022	MODIFIED:	1/26/2023
			SHEET: 1 OF 2

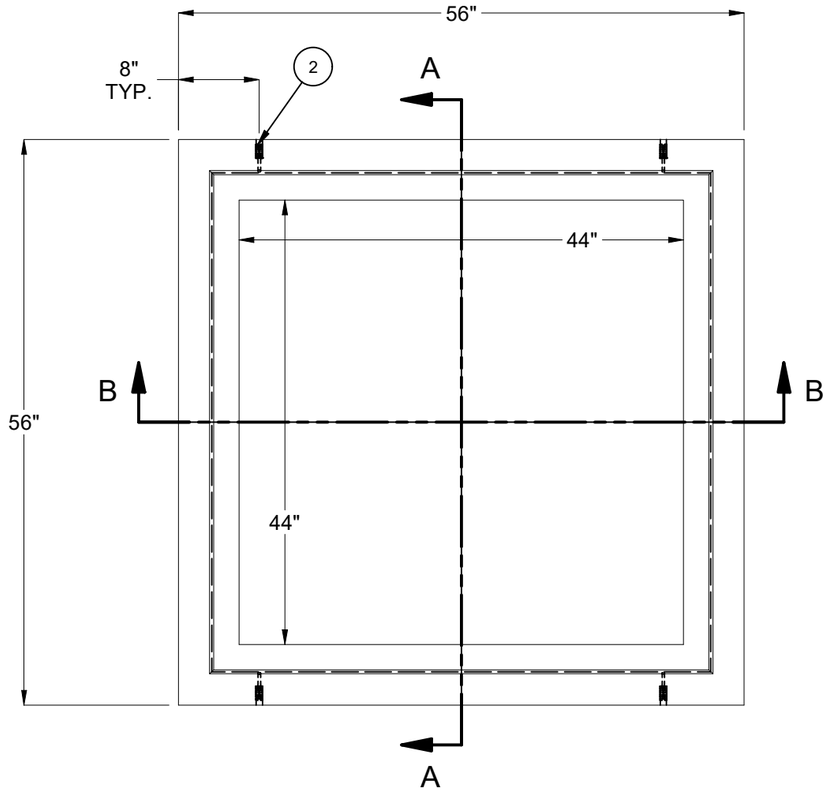

PLAN VIEW

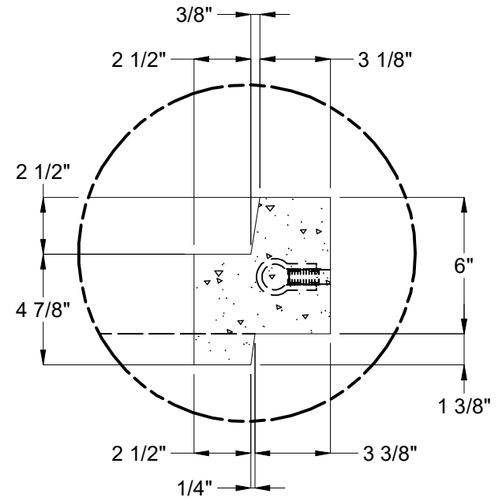

DETAIL C

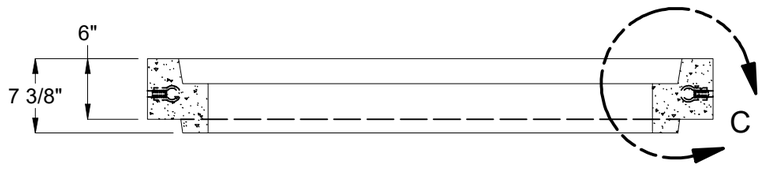

SECTION A-A

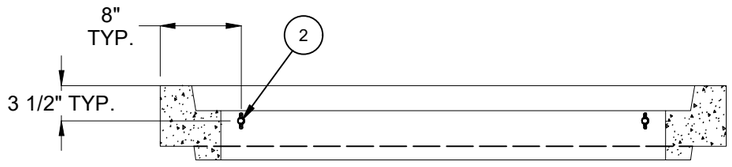

SECTION B-B

BURY DEPTH:	0.5' - 2.5' to Top		
WATER LEVEL:	5.0'	APPROX. WEIGHT:	574.55 Lbs
DESIGN SPEC:	ACI 318,ASTM C857	LOADING SPEC:	A-16 (AASHTO HS20-44)
REINFORCEMENT TYPE:	Rebar	LIFTING TYPE:	Insert

JENSEN PRECAST EST. 1968

WWW.JENSENPRECAST.COM

©2023 Jensen Precast- All rights reserved.
All materials appearing as Jensen Precast documents and the like are proprietary work product and are protected under U.S. copyright and other laws.
Unless in conjunction with business conducted with Jensen Precast, any use of Jensen Precast work product without express, written consent is prohibited, and recipient is prohibited from distributing any and all work product to non-approved third parties under penalty of civil action.

DESCRIPTION:	UV 5050X06 RISER 3W RS504 CASTING DRAWING		REV: A-1
PART NUMBER:	100004510	DRAWN BY:	J. Warren
CREATED:	7/5/2022	MODIFIED:	1/26/2023
			SHEET: 2 OF 2

100004510.idw