DESIGN NOTES:

- CONCRETE SHALL HAVE A 28 DAY MINIMUM COMPRESSIVE STRENGTH OF 5000 PSI
- SOIL UNIT WEIGHT DRY - 110 lbs/cu.ft.
- EQUIVALENT LATERAL PRESSURE DRY - 40 lbs/cu.ft.
- SOIL UNIT WEIGHT WET - 120 lbs/cu.ft.
- EQUIVALENT LATERAL PRESSURE WET - 80 lbs/cu.ft.

PRODUCTION NOTES:

- THIS PRODUCT SHALL ONLY BE PRODUCED IN A JENSEN INFRASTRUCTURE FACILITY
- LIFTING INSERTS SHALL BE INSTALLED PER MANUFACTURER'S REQUIREMENTS
- APPLIED FINISH - NONE
- INTERNAL LINER/COATING - NONE
- EXTERNAL LINER/COATING - NONE

BILL OF MATERIALS

ITEM	UNIT QTY	QTY	PART NUMBER	DESCRIPTION
1	1	1	400003618	REINFORCING MAT 400003618
2	1	1	400003619	REINFORCING MAT 400003619
3	36.837 ft^3	36.837 ft^3	100011425	CONCRETE MIX 5000 PSI
4	1	4	100004660	PULL IRON OFFSET B783519 3.5H X 19L X.875DIA GALV
5	1	12	100003014	TERMINATOR DUCT WITH SEAL 4.5IN OR 4.35IN T4351
6	1	16	100012720	INSERT PLASTIC WITH BREAK OFF SNAP 1/2IN MB
7	1	8	100002867	ANCHOR DOGBONE P52 2T X 3-3/8" GALV

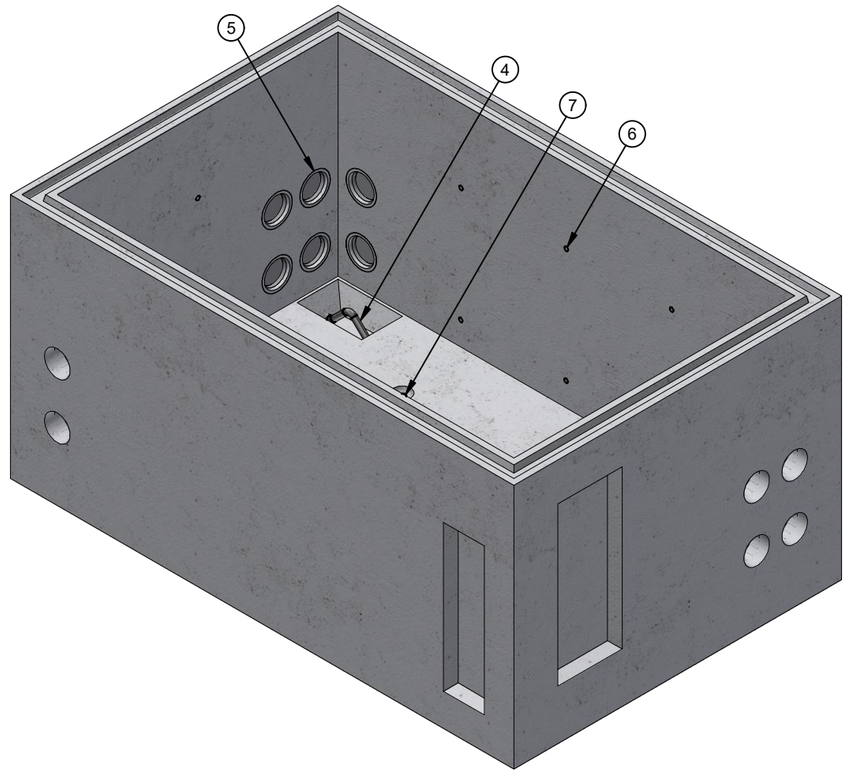

ISO LAYOUT

100004509.idw

LIFTING NOTES
■ THIS CONCRETE PRODUCT IS DESIGNED TO BE LIFTED AT 2500 PSI WITH 4 LIFT CONNECTIONS EQUALLY LOADED TO 4 LIFTING POINTS AT A MINIMUM 60° SLING ANGLE, MEASURED FROM HORIZONTAL.
*All rigging shall be design by a qualified professional. Loading diagrams show illustrations of possible rigging setups to achieve the required sling angle and load leg equalization. Other valid rigging configurations are possible. A qualified professional must be consulted prior to lifting.

RIGGING DIAGRAM*	C

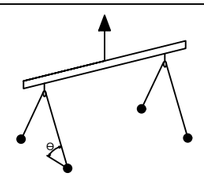

BURY DEPTH:	3.0' - 6.0' to Top		
WATER LEVEL:	3.0'	APPROX. WEIGHT:	5559.95 Lbs
DESIGN SPEC:	ACI 318,ASTM C857	LOADING SPEC:	A-16 (AASHTO HS20-44)
REINFORCEMENT TYPE:	Rebar	LIFTING TYPE:	Dogbone

Infrastructure
JENSEN
WWW.JENSENINFRASTRUCTURE.COM

©2026 Jensen Infrastructure - All rights reserved.
All materials appearing as Jensen Infrastructure documents and the like are proprietary work product and are protected under U.S. copyright and other laws.
Unless in conjunction with business conducted with Jensen Infrastructure , any use of Jensen Infrastructure work product without express, written consent is prohibited, and recipient is prohibited from distributing any and all work product to non-approved third parties under penalty of civil action.
This product shall only be produced in a Jensen Infrastructure facility.

CHANGE HISTORY

NO.	DESCRIPTION	DATE	BY
1	INITIAL RELEASE - INVENTOR MODEL	6/24/2020	AS
2	REVISED REINFORCING	3/4/2026	AMV

DESCRIPTION:	Vault 4878x36 Rect. Bottom Section Knockout,Terminators Sump CASTING LAYOUT		REV: B-1-1
PART NUMBER:	100004509	DRAWN BY: A. Viveiros	SHEET: 1 OF 2
CREATED:	6/24/2020	MODIFIED: 3/4/2026	

FEATURES		
ID	DESCRIPTION	QTY
A	10"(X) x 26"(Y) x 2" Deep Knockout	2
B	6"(X) x 24"(Y) x 2" Deep Knockout	2
C	Ø12" x 4" Deep Sump	1

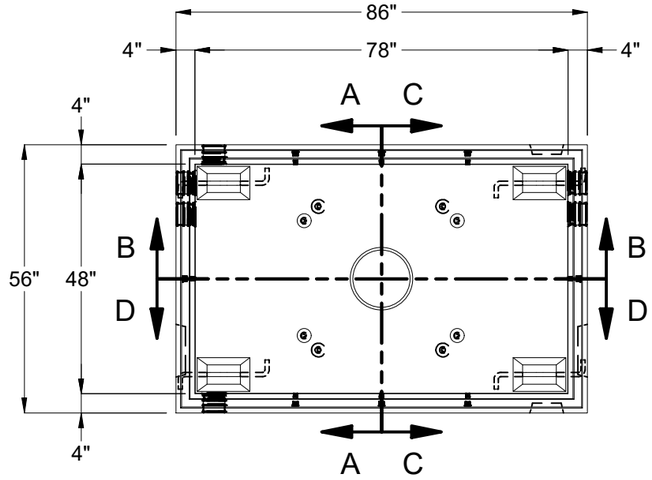

PLAN VIEW

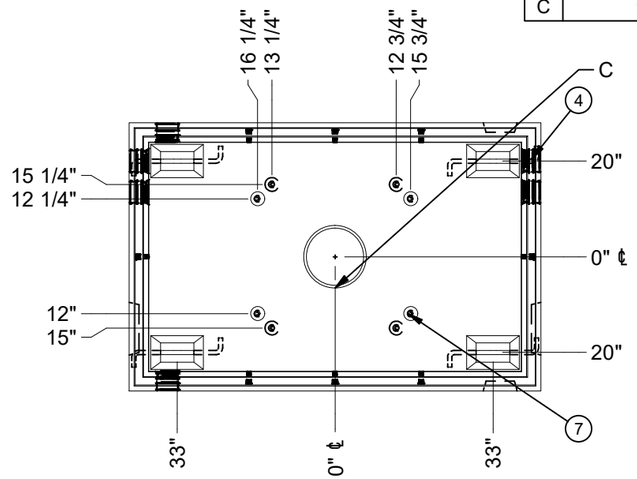

PLAN VIEW
(SHOWING OBJECT DIMENSIONS)

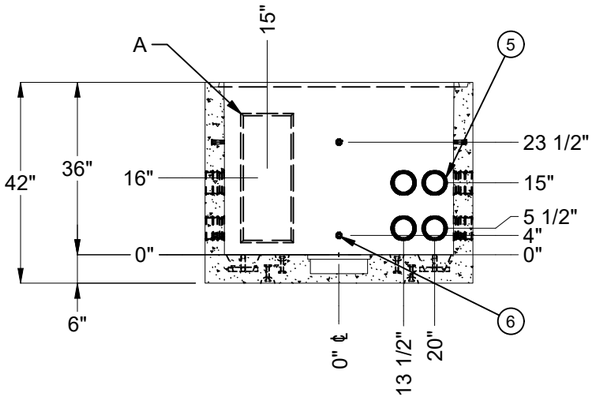

SECTION A-A

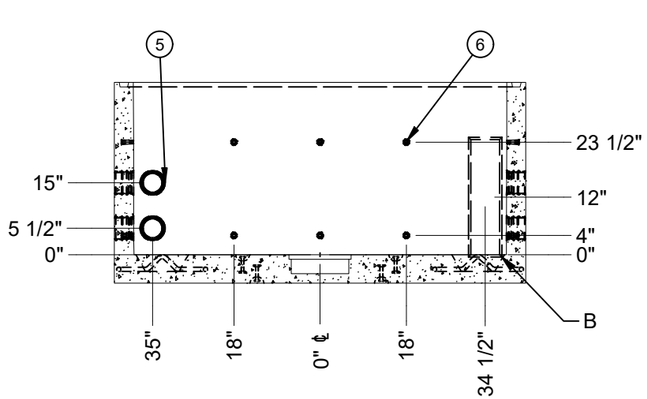

SECTION B-B

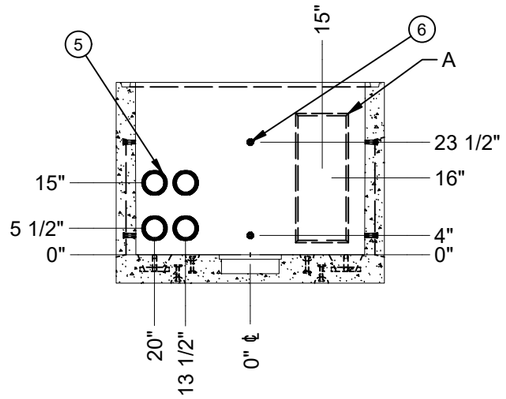

SECTION C-C

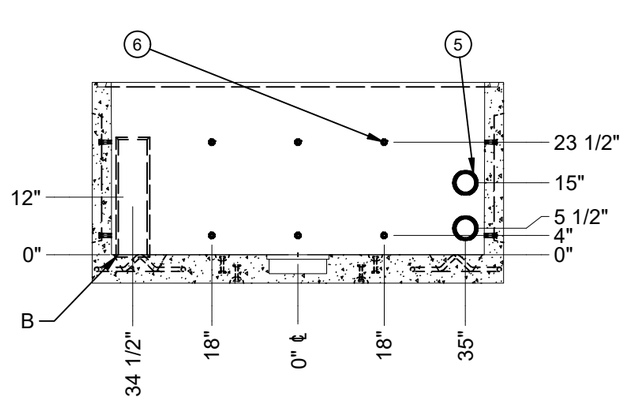

SECTION D-D

BURY DEPTH:	3.0' - 6.0' to Top		
WATER LEVEL:	3.0'	APPROX. WEIGHT:	5559.95 Lbs
DESIGN SPEC:	ACI 318,ASTM C857	LOADING SPEC:	A-16 (AASHTO HS20-44)
REINFORCEMENT TYPE:	Rebar	LIFTING TYPE:	Dogbone

Infrastructure
JENSEN
WWW.JENSENINFRASTRUCTURE.COM

©2026 Jensen Infrastructure - All rights reserved.
All materials appearing as Jensen Infrastructure documents and the like are proprietary work product and are protected under U.S. copyright and other laws.
Unless in conjunction with business conducted with Jensen Infrastructure , any use of Jensen Infrastructure work product without express, written consent is prohibited, and recipient is prohibited from distributing any and all work product to non-approved third parties under penalty of civil action.
This product shall only be produced in a Jensen Infrastructure facility.

DESCRIPTION:	Vault 4878x36 Rect. Bottom Section Knockout,Terminators Sump CASTING DRAWING		REV: B-1-1
PART NUMBER:	100004509	DRAWN BY:	A. Viveiros
CREATED:	6/24/2020	MODIFIED:	3/4/2026
			SHEET: 2 OF 2

100004509.idw