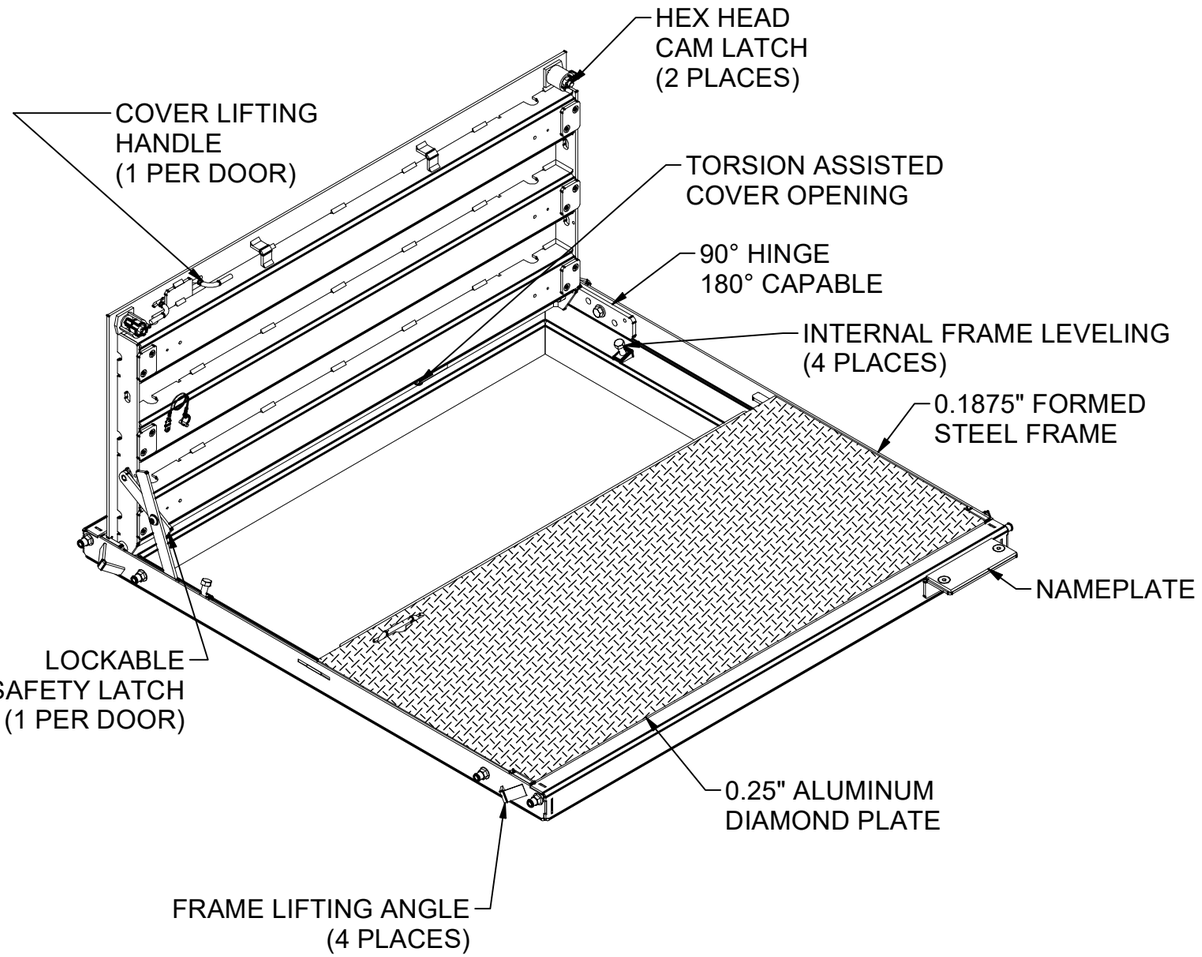

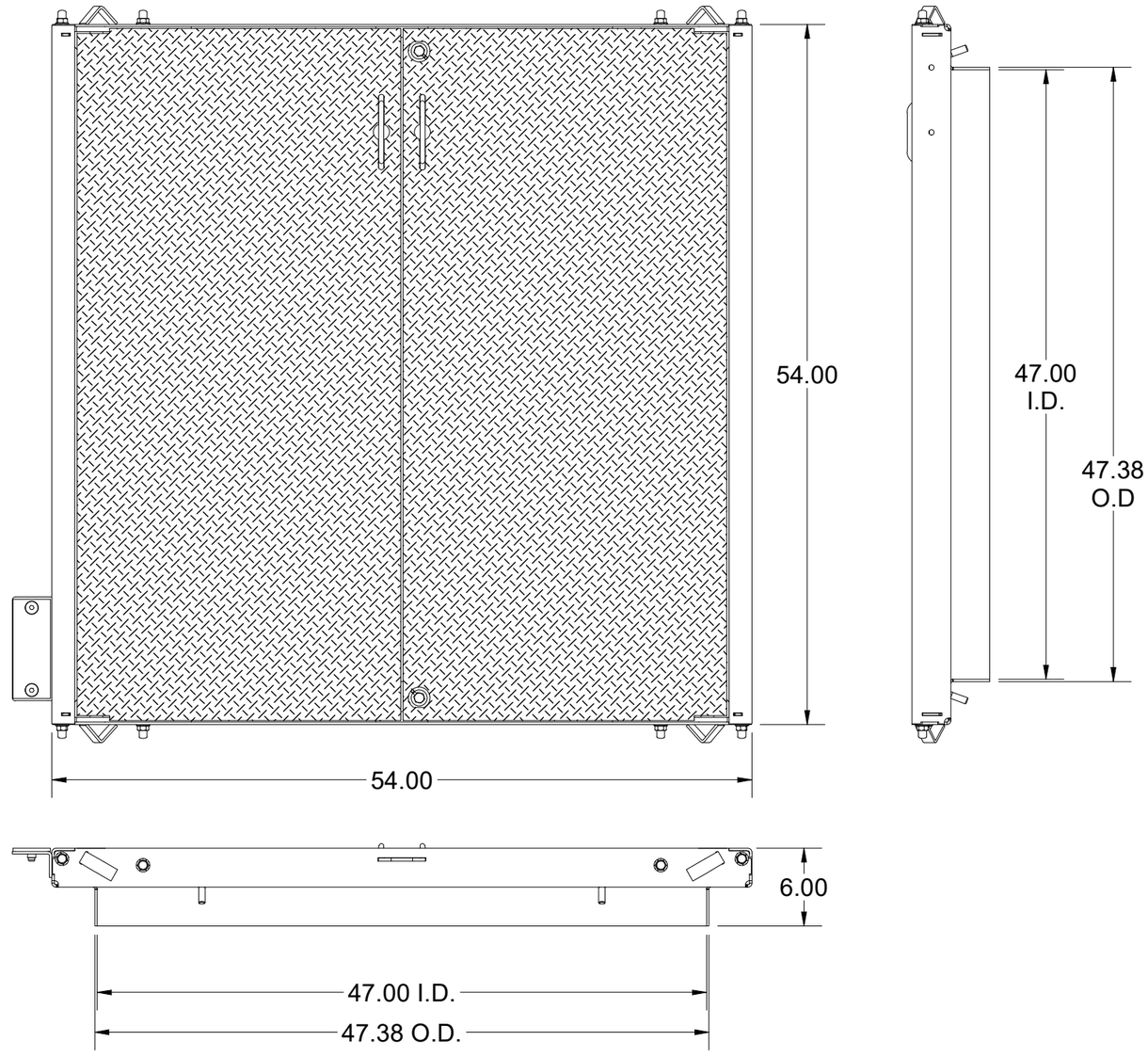

100004496.idw

LOADING CRITERIA: ASTM C1802 Load Level 02

300 psf, or 600 lb load on 5.5" x 5.5" footprint restricted to areas of pedestrian use and light maintenance vehicles use, and other areas that are inaccessible to all other vehicle traffic.

SURFACE:	Diamond Plate	FINISH:	Galvanized
WEIGHT:	259.32 lbs	MARKING:	As Noted

Infrastructure
JENSEN
527 Dunn Circle, Sparks, NV 89431
775-352-2716 FAX: 755-358-8127
JENSENMETALTECH.COM

©2025 Jensen Infrastructure - All rights reserved.
All materials appearing as Jensen Infrastructure documents and the like are proprietary work product and are protected under U.S. copyright and other laws. Unless in conjunction with business conducted with Jensen Infrastructure , any use of Jensen Infrastructure work product without express, written consent is prohibited, and recipient is prohibited from distributing any and all work product to non-approved third parties under penalty of civil action.
This product shall only be produced in a Jensen Infrastructure facility.

DESCRIPTION: CAB2-4848-AH2-DP-G-SAC-RE-OH06

48x48 Standard Cover Assembly (Loading Criteria Per ASTM C1802 Load Level 02, Bi-Metal, Hinged, Handle (1 Per Door), Diamond Plate, Galvanized, N/A, Roseville Electric) 06

PART NUMBER:	100004496	DRAWN BY:	K. Aguilar
CREATED:	3/17/2023	MODIFIED:	6/20/2025

REV: A-2-1

SHEET: 1

BILL OF MATERIALS

ITEM	UNIT QTY	QTY	PART NUMBER	DESCRIPTION	PART NAME
1	1	1	200073941	FAS-4848-AH-G-OH06	200073941
2	1	1	200073949	DAA2-T-4848-H2-DP-R-CL-SAC-RE	200073949
3	1	1	200073944	DAA2-B-4848-H2-DP-R-SAC-RE	200022595
4	1	8	100011418	WASHER FLAT 1/2 NARROW ZINC	100011418
5	1	2	100011407	BOLT HEX 1/2-13 UNC 2.25 ZINC	100011407
6	1	8	100007939	CAP VINYL .467 X 1/2	100007939
7	1	2	100007924	LANYARD 3/64 W/PIN COATED SS	100007924
8	1	2	100007918	COTTER PIN 0.094DIA X 1-1/4	100007918
9	1	2	100007915	SPRING COMPRESSION 055 X 5/8 X 7/8 LONG	100007915
10	1	26	100007882	Rivet Blind Grip .1875" Large Domed Head Range-0.376-0.5" Steel	100007882
11	1	2	100007876	Bolt Shoulder Socket Head - 3/8-16 UNC - SD-0.5" - SL-0.3125" - Grade 5 - Zinc	100007876
12	1	4	100007869	BOLT SHCS 1/2-13 X 1-3/4 SS	100007869
13	1	2	100007857	NUT FINGER 1/2-13 BRASS	100007857
14	1	4	100007744	Hex Bolt 1/2-13 UNC ZINC - PT - 3"	100007744
15	1	2	100007729	HEX NUT SLOTTED CASTLE HEAD 1/2-13 SS	100007729
16	1	2	100007727	TORSION HEX ROD 1/2 X 36 RAW	100007727
17	1	2	100007671	SPRING MOUNT ASSY .500	100007671
18	1	2	100007666	Hinge Assembly, Right, Steel	100007660
19	1	2	100007659	Hinge Assembly, Left, 1/2, Steel	100007659
20	1	2	100007492	HEX NUT NYLOCK - 1/2-13 UNC - GR5 - ZINC	100007492
21	1	1	100007391	NAME PLATE STEEL - BLANK	100007391
22	1	4	100003823	Hex Bolt 1/2-13 UNC ZINC - PT - 1.5"	100003823
23	1	8	100026256	LOW-STRENGTH STEEL FLANGE NUT, 1/2" - 13 THREAD SIZE	100026256
24	1	2	200024249	SAFETY LATCH ASSY TYPE A316 SS	200024249
25	1	12	100007926	PAD INSULATING POLYURETHANE SMALL	100007926
26	1	2	100007733	BOLT SOCKET FLAT COUNTERSUNK HEAD - 1/2-13 UNC - 1.00 - GR 5 - ZINC	100007733
27	1	4	100007859	RIVET NUT 3/8-16 FLAT KNURLED	100007859
28	1	4	100007873	BOLT SOCKET CAP - 3/8-16 UNC - 1.25 - ZINC	100007873

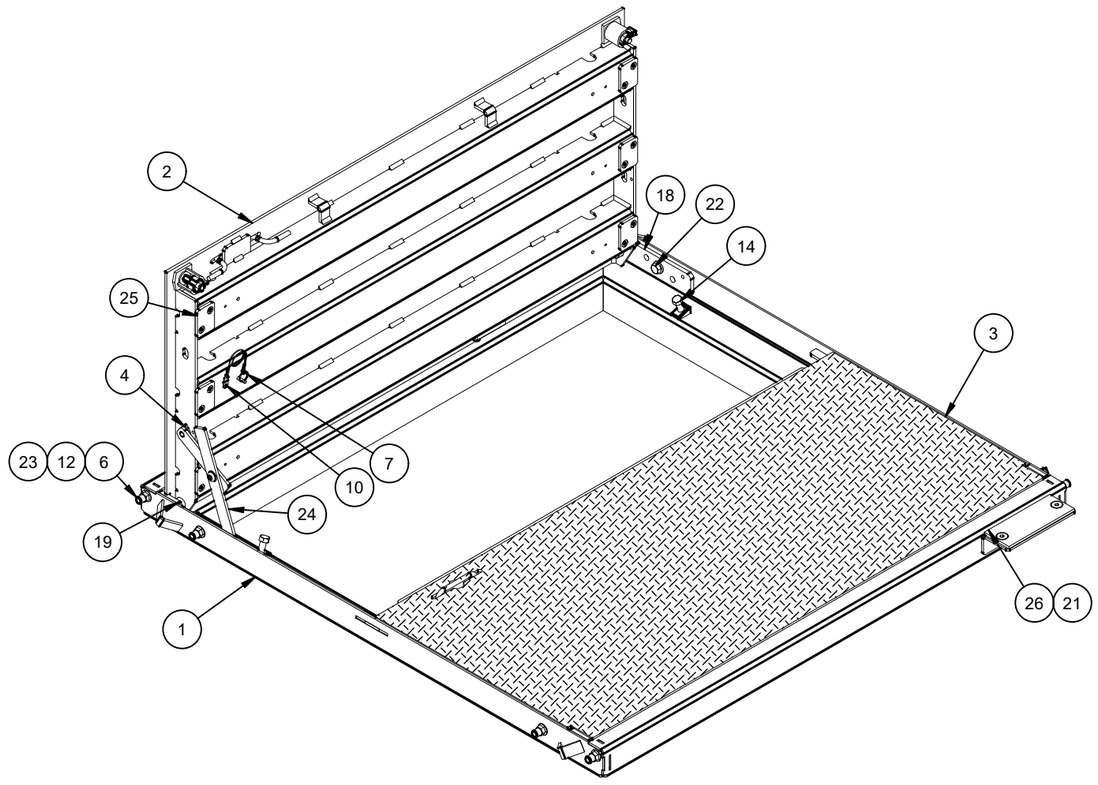

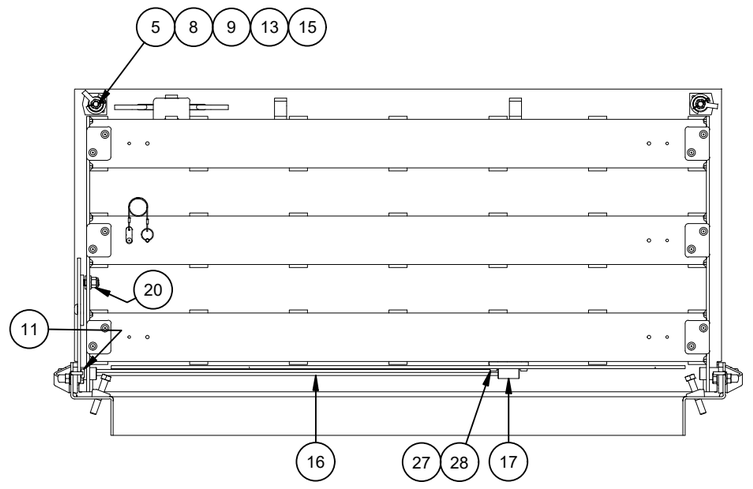

100004496.idw

REVISION HISTORY		
DESCRIPTION	DATE	REVISED BY
CLEANED UP FRAME. SWAPPED CAM LATCH PLATE FOR NEW VERSION	6/20/25	R. DOHR
ECR 56338-2 REPLACED RIGHT HINGE ASSEMBLY; UPDATED LAP BAR; UPDATED HANDLE RETAINER PLATE; ADDED WELD INDICATORS; ADJUSTED FRAME HOLES; REPLACED ISOLATION PADS; REPLACED SAFETY LATCH	7/26/24	

MATERIAL FINISH: Galvanized

MATERIAL SURFACE: Diamond Plate

Infrastructure JENSEN

527 Dunn Circle, Sparks, NV 89431
775-352-2716 FAX: 755-358-8127
JENSENMETALTECH.COM

©2025 Jensen Infrastructure - All rights reserved.
All materials appearing as Jensen Infrastructure documents and the like are proprietary work product and are protected under U.S. copyright and other laws. Unless in conjunction with business conducted with Jensen Infrastructure , any use of Jensen Infrastructure work product without express, written consent is prohibited, and recipient is prohibited from distributing any and all work product to non-approved third parties under penalty of civil action.
This product shall only be produced in a Jensen Infrastructure facility.

PART NUMBER & DESCRIPTION: 100004496 CAB2-4848-AH2-DP-G-SAC-RE-OH06

REV: A-2-1

WEIGHT: 259.32 Lbs

DRAWN BY: K. Aguilar

CREATED: 3/17/2023

MODIFIED: 6/20/2025

SHEET: 2

BILL OF MATERIALS

ITEM	UNIT QTY	QTY	PART NUMBER	DESCRIPTION	PART NAME
1	28.555 lbmass	57.111 lbmass	100007734	Frame Component Steel Frame End, Adjustable	200073943
2	1	4	200018691	FRAME BOLT DOUBLER SLOT	200018691
3	24.156 lbmass	48.351 lbmass	100007734	Frame Component Steel Frame Side, Adjustable	200073942
4	1	2	100007735	Frame Cam Latch Catch Plate - 1/4" A36, Dual Door, 0.8125" Overhang	200100755
5	1	2	100007867	PEM NUT 3/8-16 NON-LOCKING H PLATED	100007867
6	1	4	100007641	FRAME LIFTING BRACKET	100007641
7	1	1	100007667	NAME PLATE FRAME ANGLE	100007667
8	1	4	100007863	NUT LEVELER 1/2-13 WELDABLE CAST STEEL	100007863

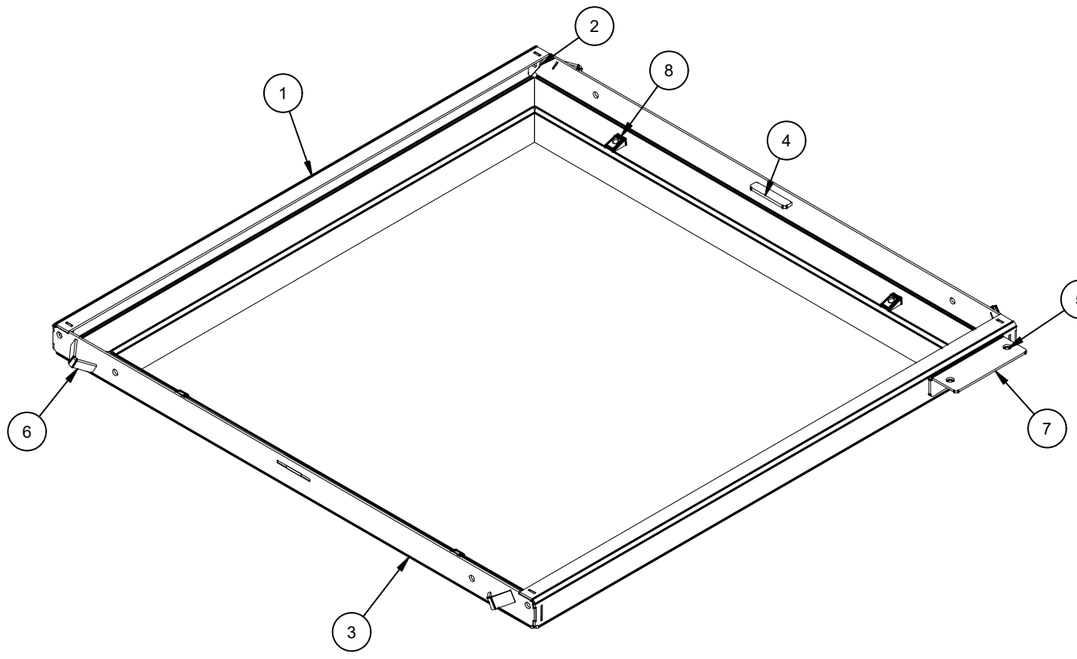

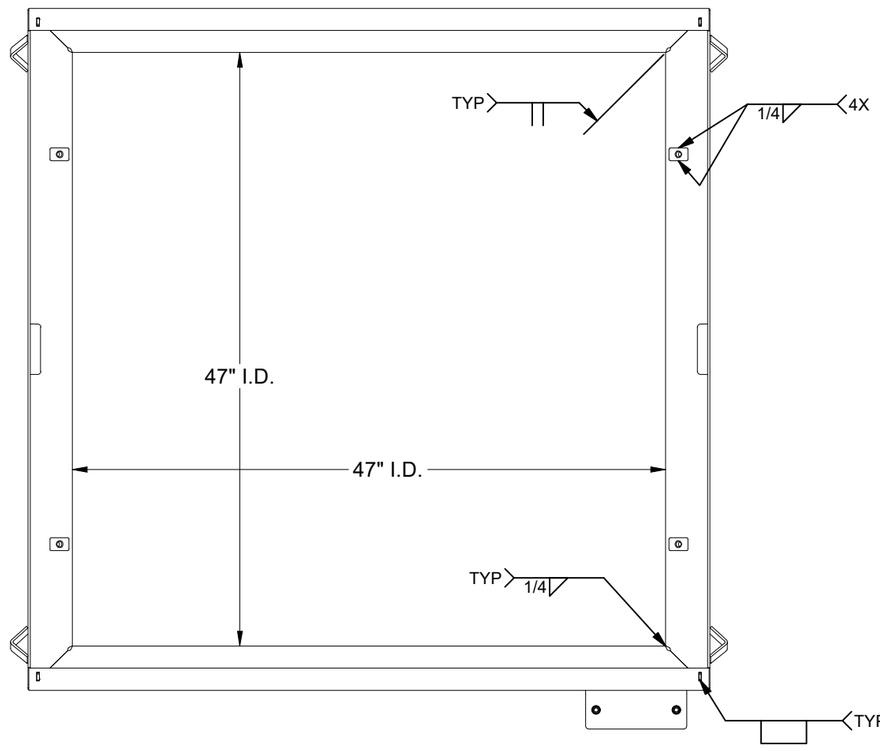

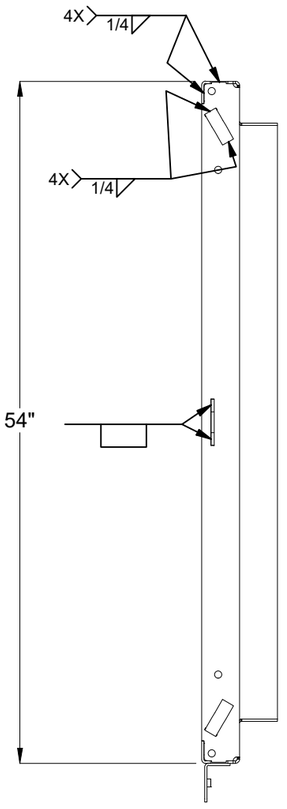

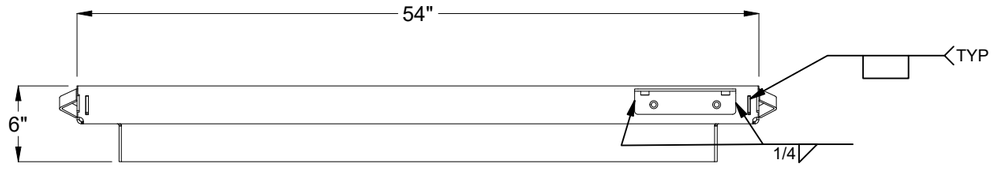

100004496.idw

MATERIAL FINISH: Galvanized	Infrastructure JENSEN 527 Dunn Circle, Sparks, NV 89431 775-352-2716 FAX: 755-358-8127 *JENSENMETALTECH.COM*	©2025 Jensen Infrastructure - All rights reserved. All materials appearing as Jensen Infrastructure documents and the like are proprietary work product and are protected under U.S. copyright and other laws. Unless in conjunction with business conducted with Jensen Infrastructure , any use of Jensen Infrastructure work product without express, written consent is prohibited, and recipient is prohibited from distributing any and all work product to non-approved third parties under penalty of civil action. This product shall only be produced in a Jensen Infrastructure facility.	PART NUMBER & DESCRIPTION: 200073941 FAS-4848-AH-G-OH06 — REV: A-2-1
MATERIAL SURFACE: Smooth			WEIGHT: 109.86 Lbs — DRAWN BY: K. Aguilar — SHEET: 3
			CREATED: 3/17/2023 — MODIFIED: 6/20/2025

BILL OF MATERIALS

ITEM	UNIT QTY	QTY	PART NUMBER	DESCRIPTION	PART NAME
1	34.086 lbmass	34.086 lbmass	100007808	Door Component Aluminum Plate, Bottom	200073948
2	1.223 lbmass	2.446 lbmass	100007811	Door Component Aluminum Side Bar	200022601
3	7.834 lbmass	23.510 lbmass	100007813	Door Component Aluminum Channel	200022598
4	2.159 lbmass	2.159 lbmass	100007804	Door Component Aluminum Lap Bar 48in, 2.5" Stiffener Offset	200091551
5	1	1	100007645	LEAF PULL HANDLE 3/8IN DIA SST	100007645
6	1	2	100007642	LIFTING BRACKET ALU LEAF	100007642

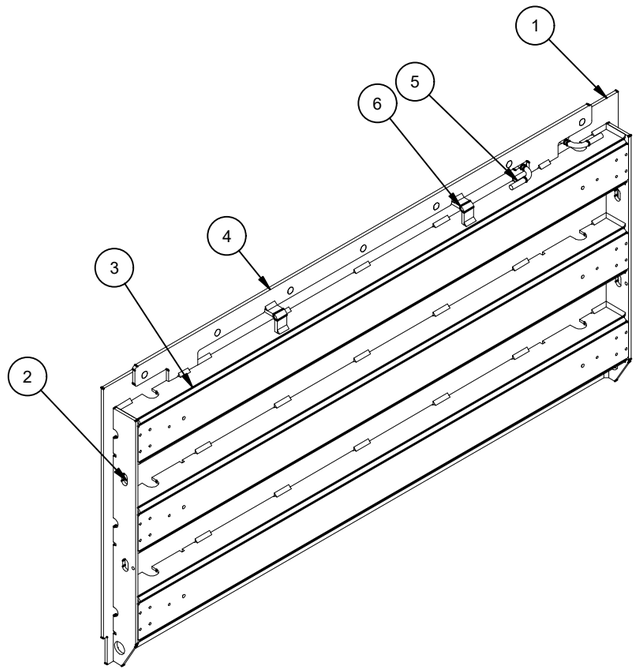

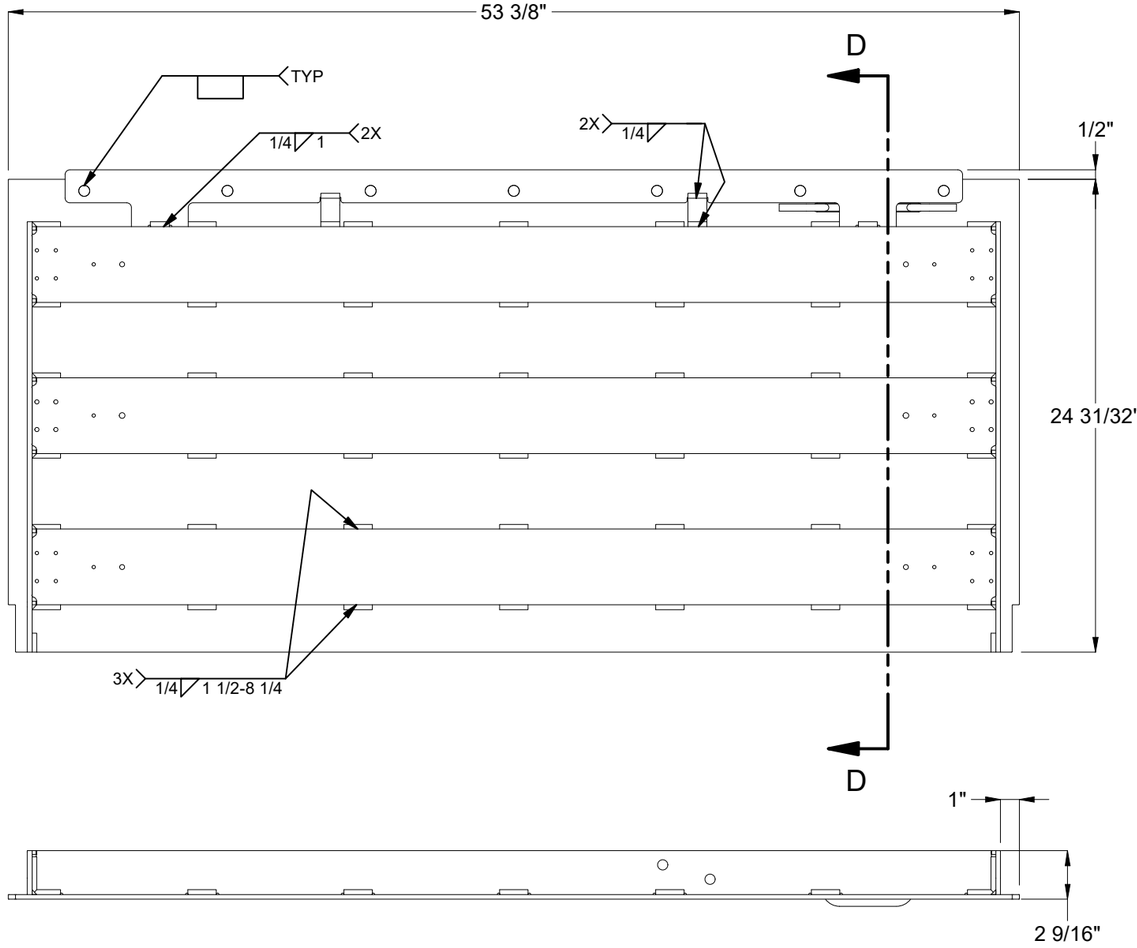

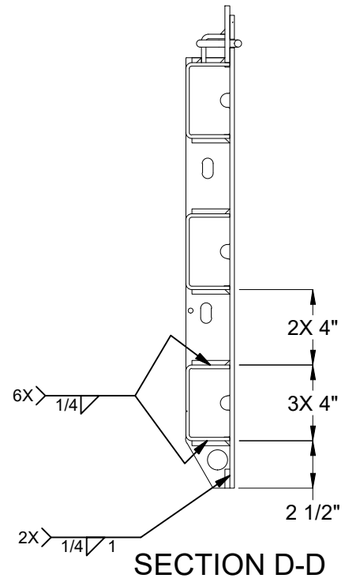

SECTION D-D

MATERIAL FINISH: Raw		PART NUMBER & DESCRIPTION: 200073944 DAA2-B-4848-H2-DP-R-SAC-RE	REV: A-2-1
MATERIAL SURFACE: Diamond Plate	WEIGHT: 63.03 Lbs	DRAWN BY: K. Aguilar	SHEET: 4
	CREATED: 3/17/2023	MODIFIED: 6/20/2025	

Infrastructure JENSEN

527 Dunn Circle, Sparks, NV 89431
775-352-2716 FAX: 755-358-8127
JENSENMETALTECH.COM

©2025 Jensen Infrastructure - All rights reserved.
All materials appearing as Jensen Infrastructure documents and the like are proprietary work product and are protected under U.S. copyright and other laws. Unless in conjunction with business conducted with Jensen Infrastructure , any use of Jensen Infrastructure work product without express, written consent is prohibited, and recipient is prohibited from distributing any and all work product to non-approved third parties under penalty of civil action.
This product shall only be produced in a Jensen Infrastructure facility.

100004496.idw

BILL OF MATERIALS

ITEM	UNIT QTY	QTY	PART NUMBER	DESCRIPTION	PART NAME
1	33.977 lbmass	33.977 lbmass	100007808	Door Component Aluminum Plate, Top	200073950
2	1.223 lbmass	2.446 lbmass	100007811	Door Component Aluminum Side Bar	200022601
3	7.834 lbmass	23.510 lbmass	100007813	Door Component Aluminum Channel	200022598
4	0.129 lbmass	0.129 lbmass	100007804	HANDLE RETAINER ALUMINUM	200079449
5	1	1	100007645	LEAF PULL HANDLE 3/8IN DIA SST	100007645
6	1	2	100007642	LIFTING BRACKET ALU LEAF	100007642
7	1	2	100007676	CAM BASE ALUMINUM	100007676
8	1	2	100007674	CAM TUBE ALUM 1.56IN LONG	100007674

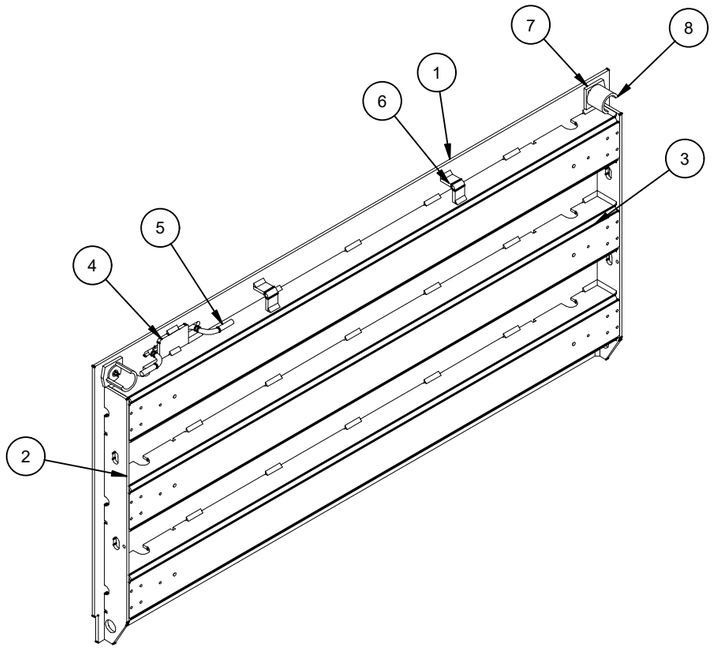

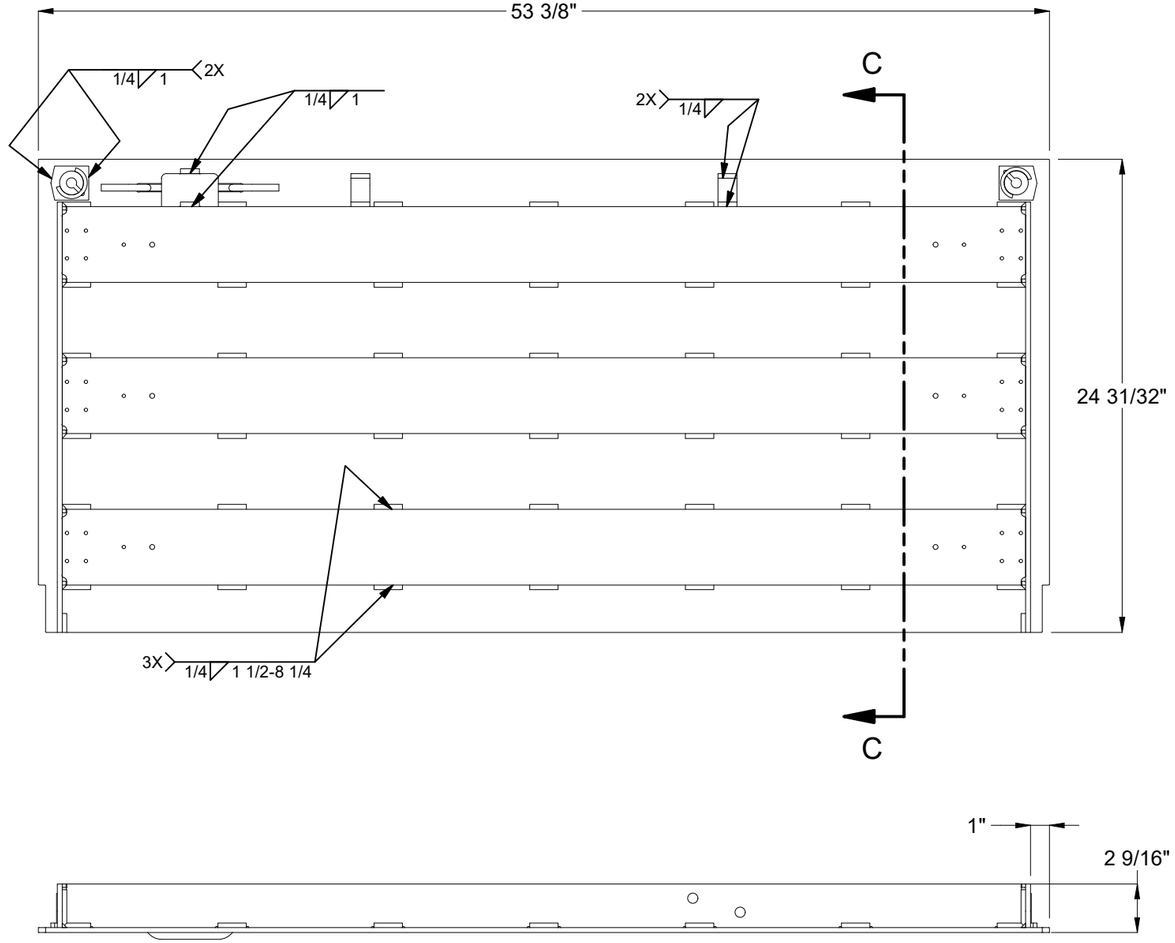

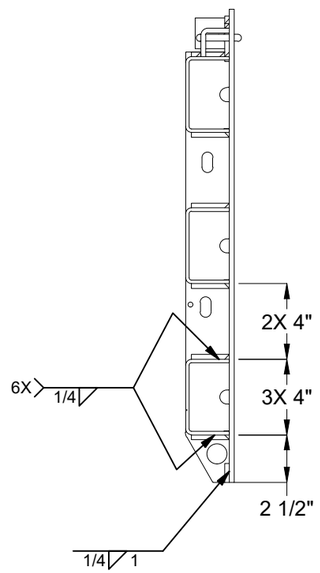

MATERIAL FINISH: Raw	Infrastructure JENSEN 527 Dunn Circle, Sparks, NV 89431 775-352-2716 FAX: 755-358-8127 *JENSENMETALTECH.COM*	©2025 Jensen Infrastructure - All rights reserved. All materials appearing as Jensen Infrastructure documents and the like are proprietary work product and are protected under U.S. copyright and other laws. Unless in conjunction with business conducted with Jensen Infrastructure , any use of Jensen Infrastructure work product without express, written consent is prohibited, and recipient is prohibited from distributing any and all work product to non-approved third parties under penalty of civil action. This product shall only be produced in a Jensen Infrastructure facility.	PART NUMBER & DESCRIPTION: 200073949 DAA2-T-4848-H2-DP-R-CL-SAC-RE
MATERIAL SURFACE: Diamond Plate			WEIGHT: 61.19 Lbs DRAWN BY: K. Aguilar CREATED: 3/17/2023 MODIFIED: 6/20/2025

REV: A-2-1

SHEET: 5

100004496.idw

BURN LIST - BOM

PART NAME	ITEM QTY	QTY	DESCRIPTION	STOCK NUMBER	MATERIAL	MASS	SHEET
200073942	2	48.312 lbmass	Frame Component Steel Frame Side, Adjustable	100007734	STL ASTM A36 SM-HRPO 60X120 RAW .1875	24.156 lbmass	07
200073943	2	57.111 lbmass	Frame Component Steel Frame End, Adjustable	100007734	STL ASTM A36 SM-HRPO 60X120 RAW .1875	28.555 lbmass	08
200073945	6	47.006 lbmass	Door Component Aluminum Channel	100007813	SHT ALUM ASTM 5052 SM RAW .1875	7.834 lbmass	09
200073947	4	4.893 lbmass	Door Component Aluminum Side Bar	100007811	SHT ALUM ASTM 5052 SM RAW .25	1.223 lbmass	10
200073948	1	34.086 lbmass	Door Component Aluminum Plate, Bottom	100007808	SHT ALUM ASTM 6061 DP RAW .25	34.086 lbmass	11
200073950	1	33.977 lbmass	Door Component Aluminum Plate, Top	100007808	SHT ALUM ASTM 6061 DP RAW .25	33.977 lbmass	12
200079449	1	0.129 lbmass	HANDLE RETAINER ALUMINUM	100007804	SHT ALUM ASTM 6061 SM-RAW 60W .25	0.129 lbmass	13
200091551	1	2.159 lbmass	Door Component Aluminum Lap Bar 48in, 2.5" Stiffener Offset	100007804	SHT ALUM ASTM 6061 SM-RAW 60W .25	2.159 lbmass	14

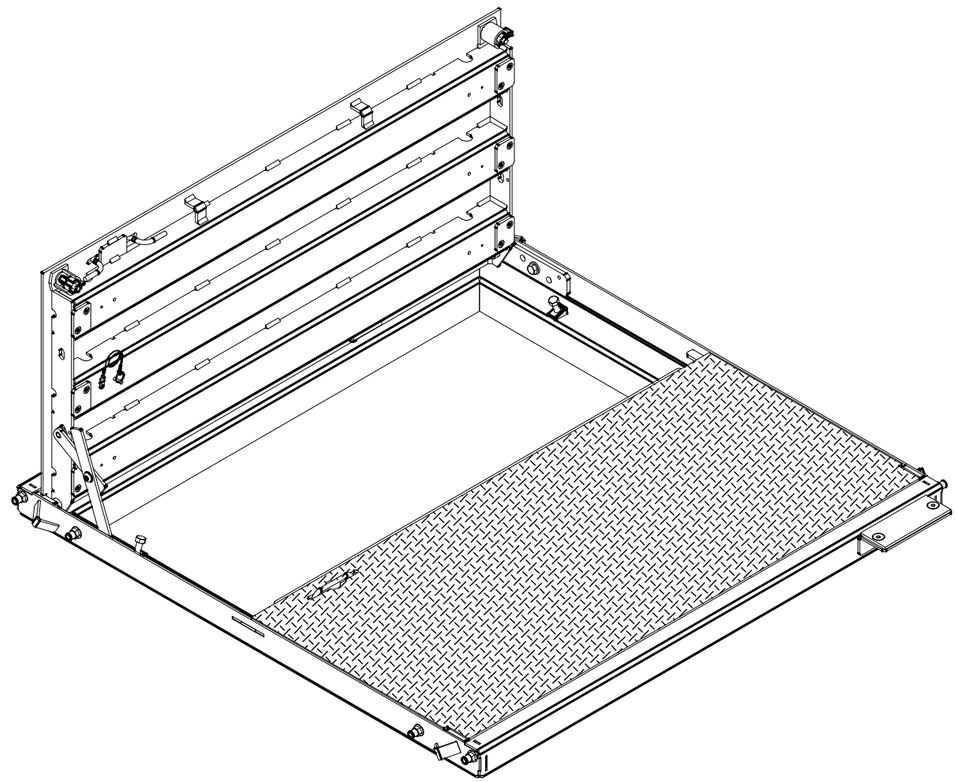

100004496.idw

MATERIAL FINISH: Galvanized

MATERIAL SURFACE: Diamond Plate

Infrastructure JENSEN
527 Dunn Circle, Sparks, NV 89431
775-352-2716 FAX: 755-358-8127
JENSENMETALTECH.COM

©2025 Jensen Infrastructure - All rights reserved.
All materials appearing as Jensen Infrastructure documents and the like are proprietary work product and are protected under U.S. copyright and other laws. Unless in conjunction with business conducted with Jensen Infrastructure , any use of Jensen Infrastructure work product without express, written consent is prohibited, and recipient is prohibited from distributing any and all work product to non-approved third parties under penalty of civil action.
This product shall only be produced in a Jensen Infrastructure facility.

PART NUMBER & DESCRIPTION: 100004496 CAB2-4848-AH2-DP-G-SAC-RE-OH06

REV: A-2-1

WEIGHT: 259.32 Lbs

DRAWN BY: K. Aguilar

CREATED: 3/17/2023

MODIFIED: 6/20/2025

SHEET: 6

SYMMETRIC

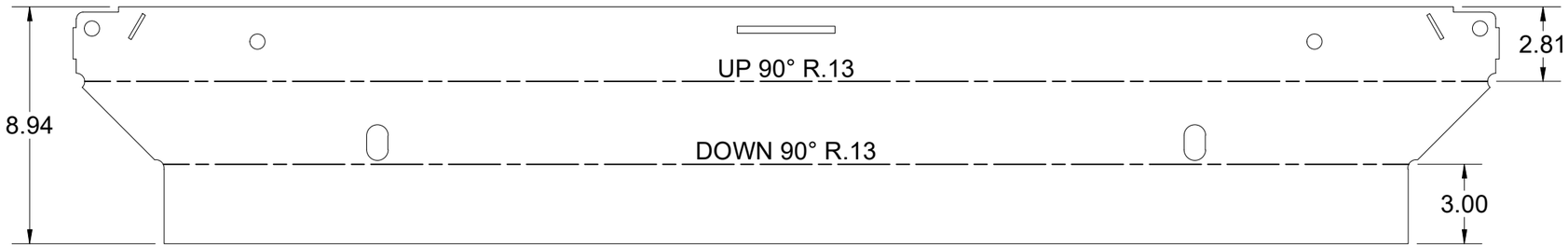

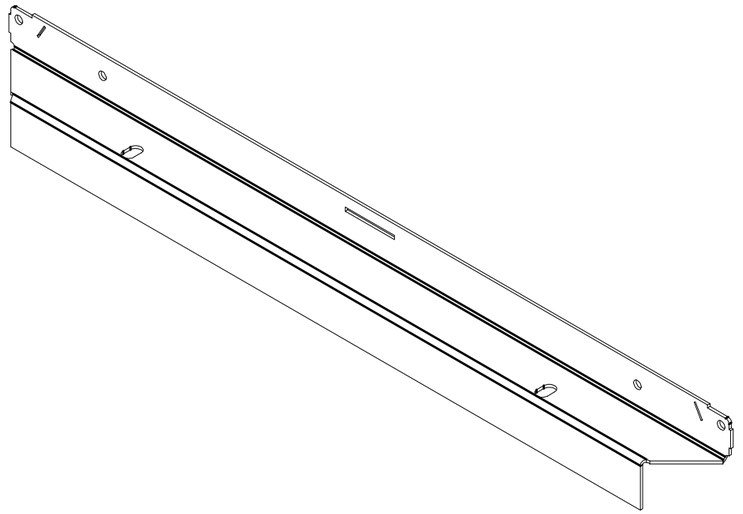

100004496.idw

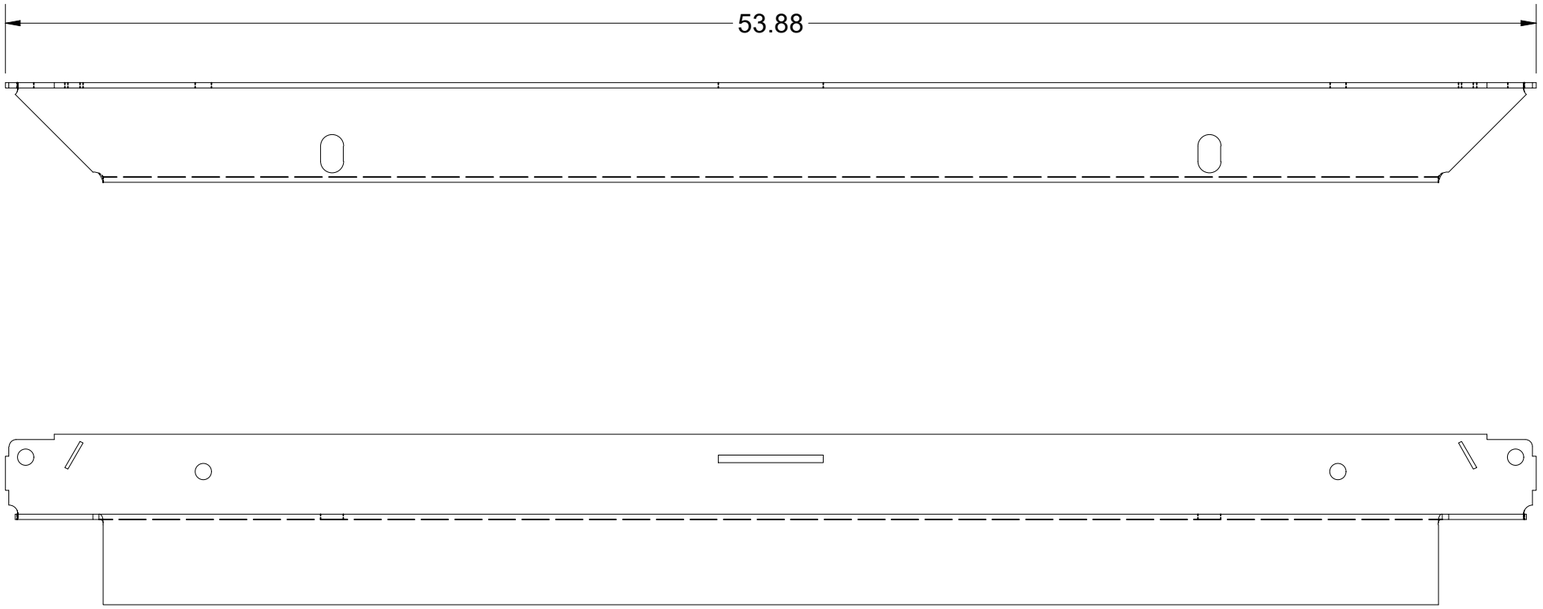

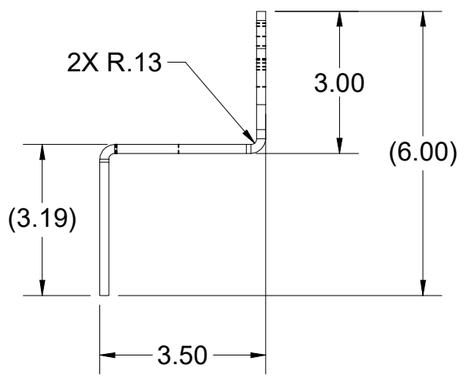

BEND TABLE			
BEND RADIUS	V-OPENING	BEND ANGLE	BEND DEDUCTION
0.125	2	90	0.375

MATERIAL IFS: 100007734

MATERIAL THK: 0.1875

MAT DESCRIPTION: STL ASTM A36 SM-HRPO 60X120 RAW .1875

Infrastructure JENSEN

527 Dunn Circle, Sparks, NV 89431
775-352-2716 FAX: 755-358-8127
JENSENMETALTECH.COM

©2025 Jensen Infrastructure - All rights reserved. All materials appearing as Jensen Infrastructure documents and the like are proprietary work product and are protected under U.S. copyright and other laws. Unless in conjunction with business conducted with Jensen Infrastructure , any use of Jensen Infrastructure work product without express, written consent is prohibited, and recipient is prohibited from distributing any and all work product to non-approved third parties under penalty of civil action. This product shall only be produced in a Jensen Infrastructure facility.

NAME & DESCRIPTION: 200073942 Frame Component Steel Frame Side, Adjustable

REV: A-2-1

WEIGHT: 24.156 lbmass

DRAWN BY: K. Aguilar

CREATED: 3/17/2023

MODIFIED: 6/20/2025

SHEET: 7 OF 14

NOT SYMMETRIC

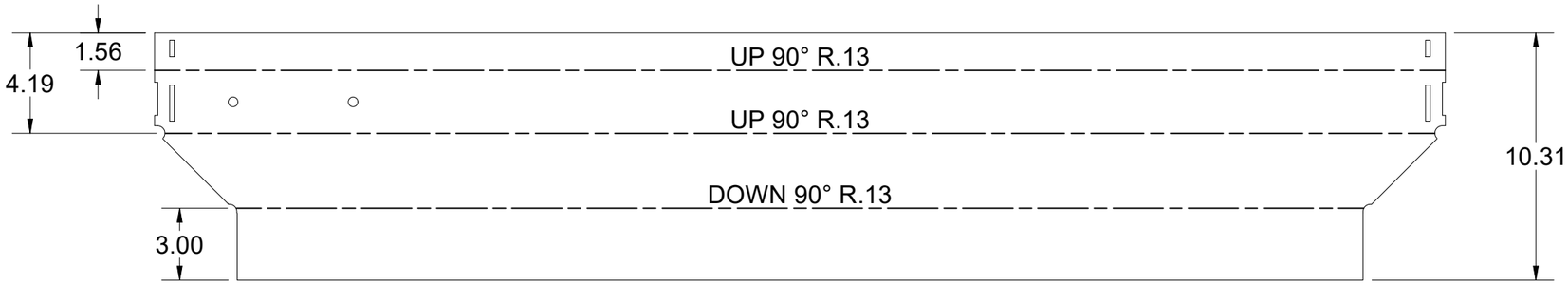

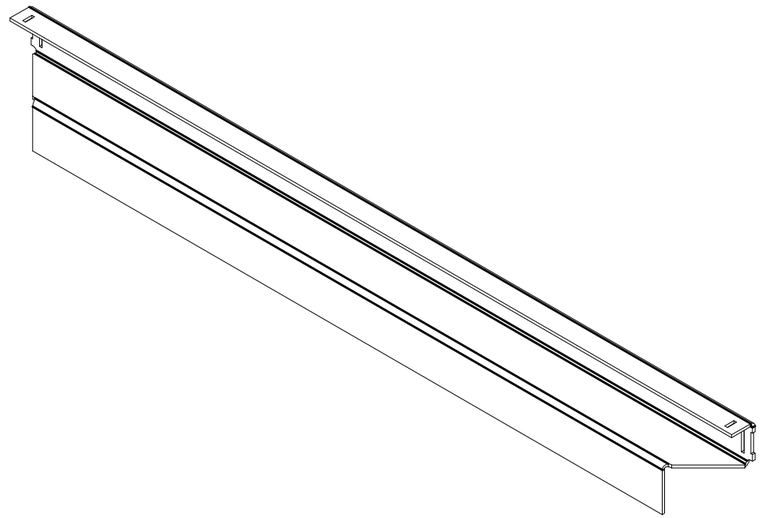

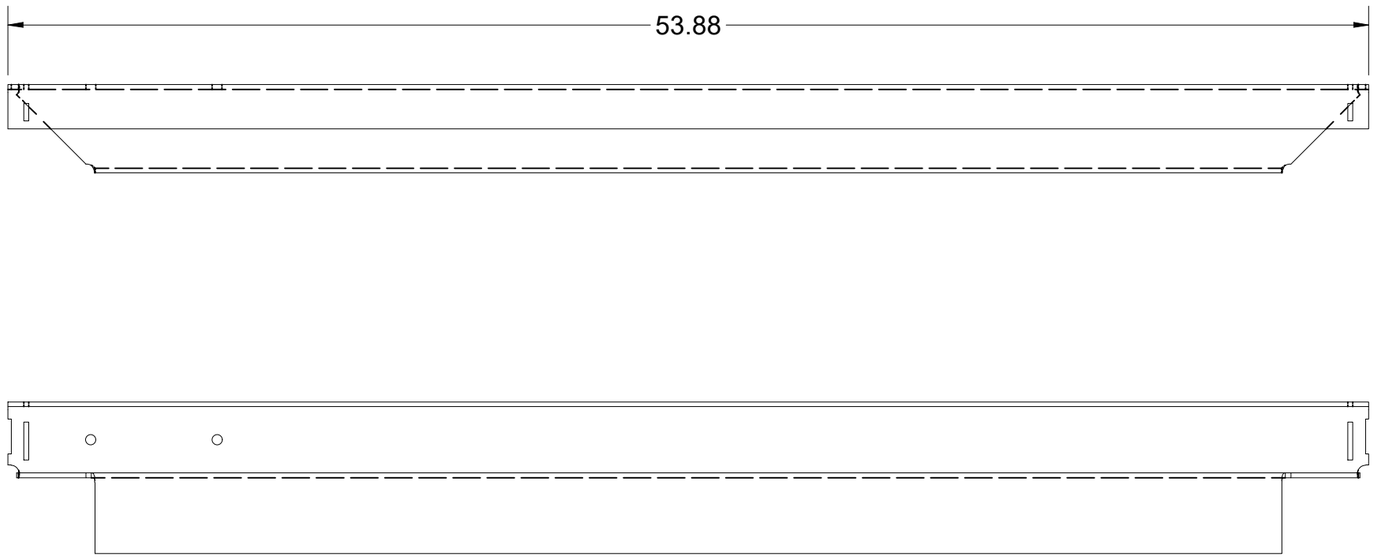

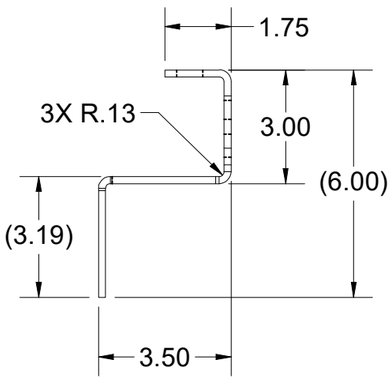

BEND TABLE				MATERIAL IFS: 100007734
BEND RADIUS	V-OPENING	BEND ANGLE	BEND DEDUCTION	MATERIAL THK: 0.1875
0.125	2	90	0.375	MAT DESCRIPTION: STL ASTM A36 SM-HRPO 60X120 RAW .1875

Infrastructure
JENSEN
527 Dunn Circle, Sparks, NV 89431
775-352-2716 FAX: 755-358-8127
JENSENMETALTECH.COM

©2025 Jensen Infrastructure - All rights reserved.
All materials appearing as Jensen Infrastructure documents and the like are proprietary work product and are protected under U.S. copyright and other laws. Unless in conjunction with business conducted with Jensen Infrastructure , any use of Jensen Infrastructure work product without express, written consent is prohibited, and recipient is prohibited from distributing any and all work product to non-approved third parties under penalty of civil action.
This product shall only be produced in a Jensen Infrastructure facility.

NAME & DESCRIPTION: 200073943 Frame Component Steel Frame End, Adjustable		REV: A-2-1
WEIGHT: 28.555 lbmass	DRAWN BY: K. Aguilar	SHEET: 8 OF 14
CREATED: 3/17/2023	MODIFIED: 6/20/2025	

100004496.idw

NOT SYMMETRIC

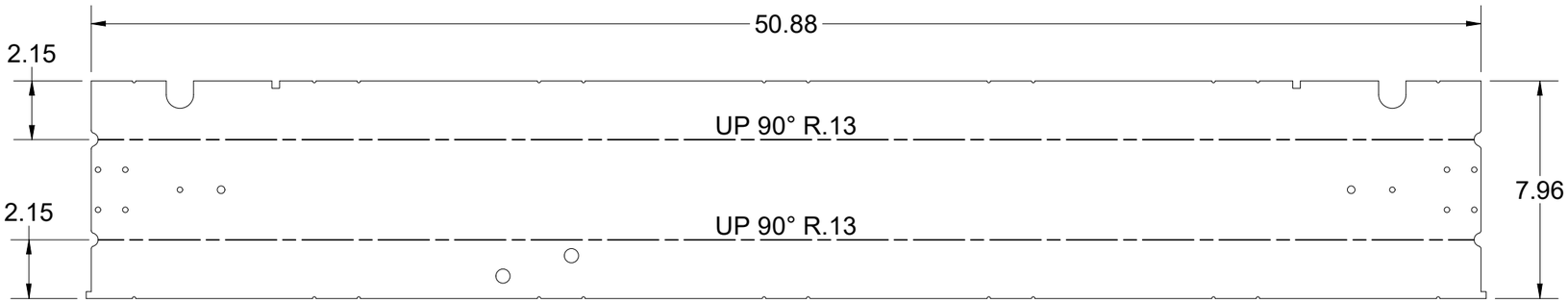

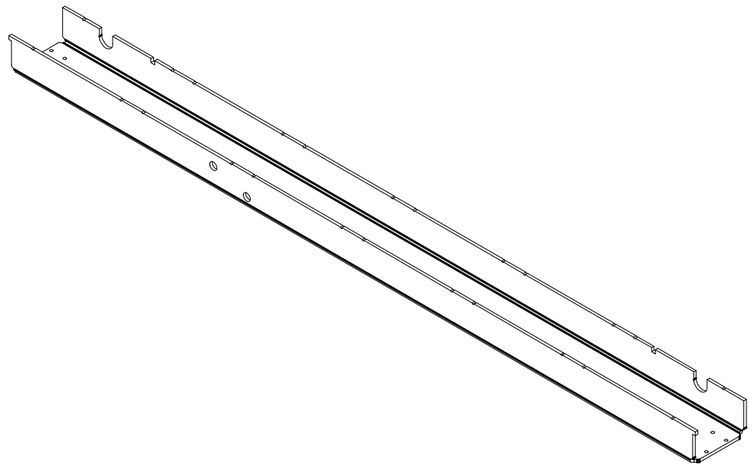

100004496.idw

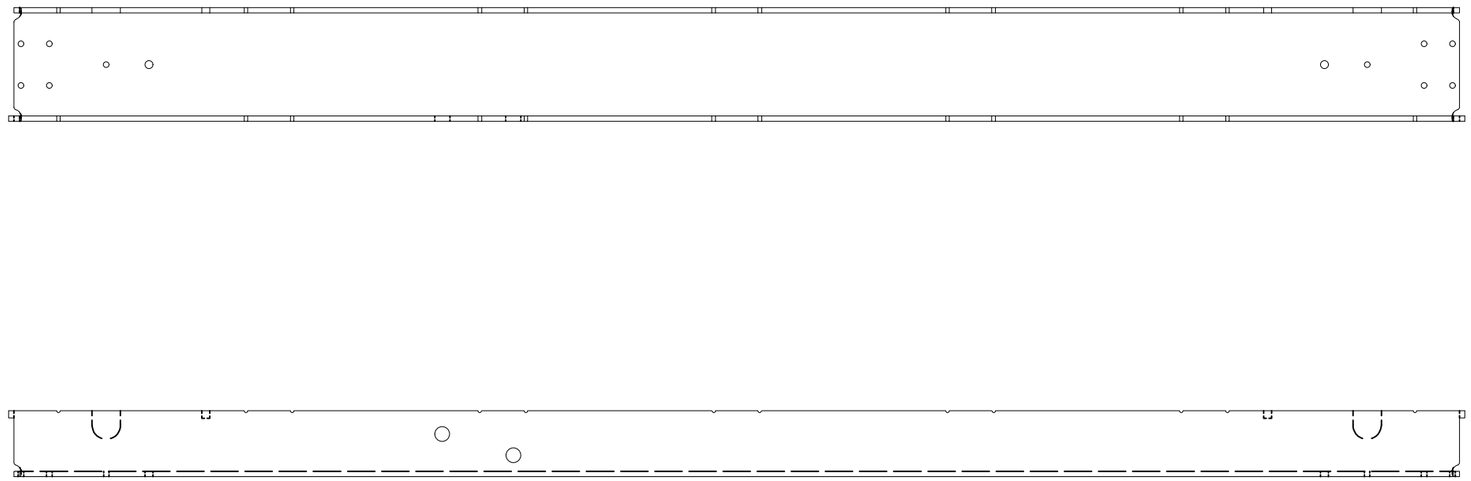

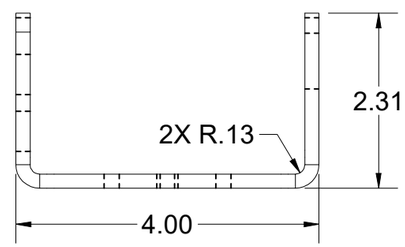

BEND TABLE			
BEND RADIUS	V-OPENING	BEND ANGLE	BEND DEDUCTION
0.125	2	90	0.3350

MATERIAL IFS: 100007813

MATERIAL THK: 0.1875

MAT DESCRIPTION: SHT ALUM ASTM 5052 SM RAW .1875

Infrastructure JENSEN

527 Dunn Circle, Sparks, NV 89431
775-352-2716 FAX: 755-358-8127
JENSENMETALTECH.COM

©2025 Jensen Infrastructure - All rights reserved.
All materials appearing as Jensen Infrastructure documents and the like are proprietary work product and are protected under U.S. copyright and other laws. Unless in conjunction with business conducted with Jensen Infrastructure , any use of Jensen Infrastructure work product without express, written consent is prohibited, and recipient is prohibited from distributing any and all work product to non-approved third parties under penalty of civil action.
This product shall only be produced in a Jensen Infrastructure facility.

NAME & DESCRIPTION: 200073945
Door Component Aluminum Channel

REV: A-2-1

WEIGHT: 7.834 lbmass

DRAWN BY: K. Aguilar

CREATED: 3/17/2023

MODIFIED: 6/20/2025

SHEET: 9 OF 14

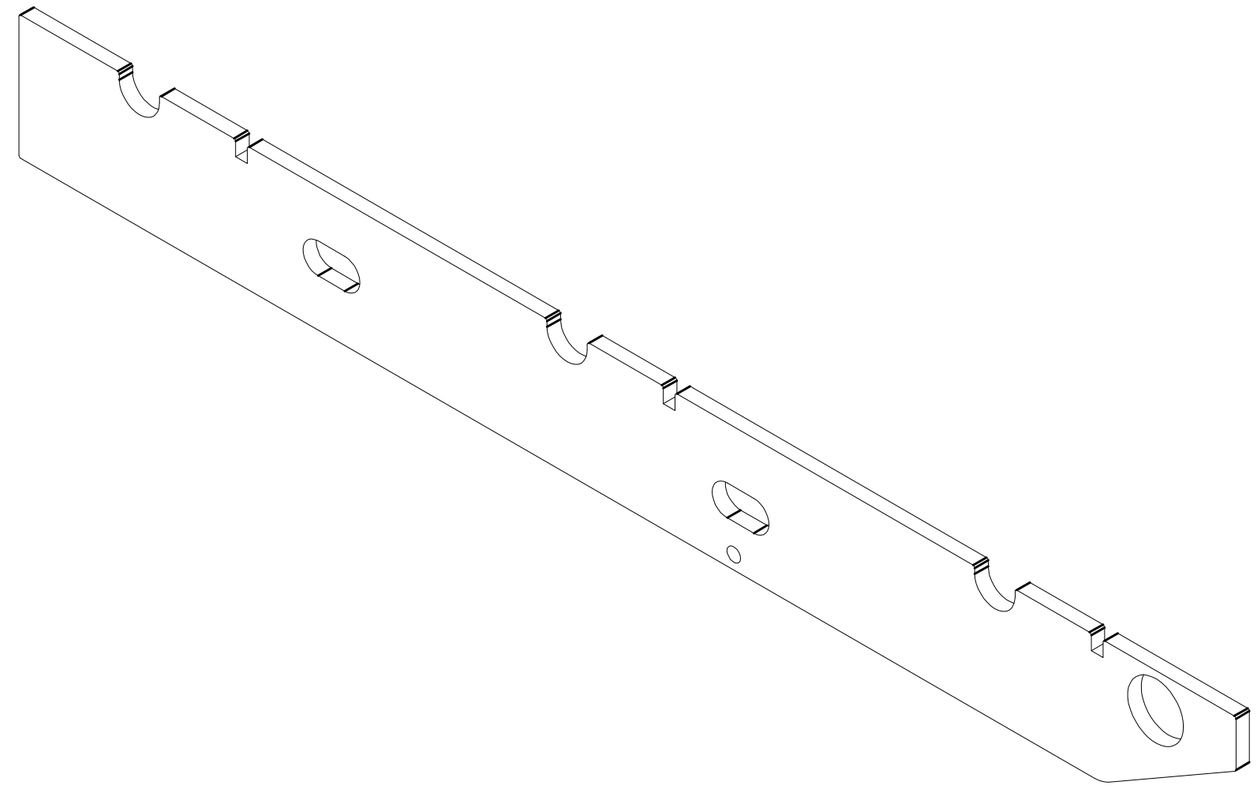

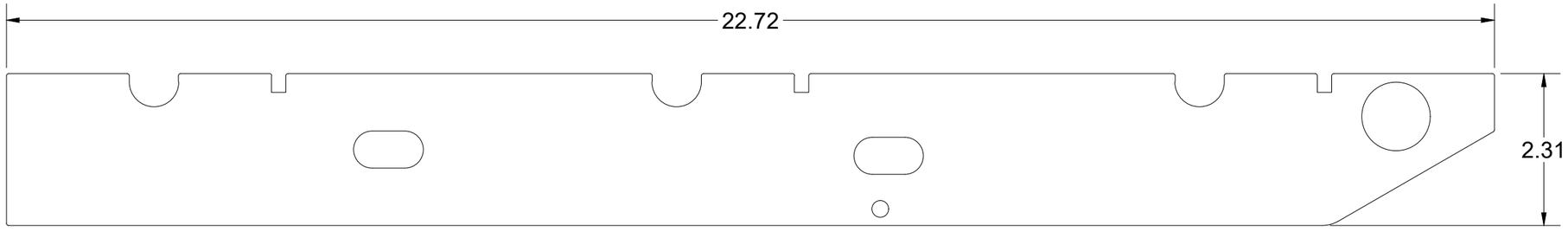

100004496.idw

BEND TABLE				MATERIAL IFS: 100007811
BEND RADIUS	V-OPENING	BEND ANGLE	BEND DEDUCTION	MATERIAL THK: 0.25
-	-	-	-	MAT DESCRIPTION: SHT ALUM ASTM 5052 SM RAW .25

Infrastructure
JENSEN
527 Dunn Circle, Sparks, NV 89431
775-352-2716 FAX: 755-358-8127
JENSENMETALTECH.COM

©2025 Jensen Infrastructure - All rights reserved.
All materials appearing as Jensen Infrastructure documents and the like are proprietary work product and are protected under U.S. copyright and other laws. Unless in conjunction with business conducted with Jensen Infrastructure , any use of Jensen Infrastructure work product without express, written consent is prohibited, and recipient is prohibited from distributing any and all work product to non-approved third parties under penalty of civil action.
This product shall only be produced in a Jensen Infrastructure facility.

NAME & DESCRIPTION: 200073947 Door Component Aluminum Side Bar		REV: A-2-1
WEIGHT: 1.223 lbmass	DRAWN BY: K. Aguilar	SHEET: 10 OF 14
CREATED: 3/17/2023	MODIFIED: 6/20/2025	

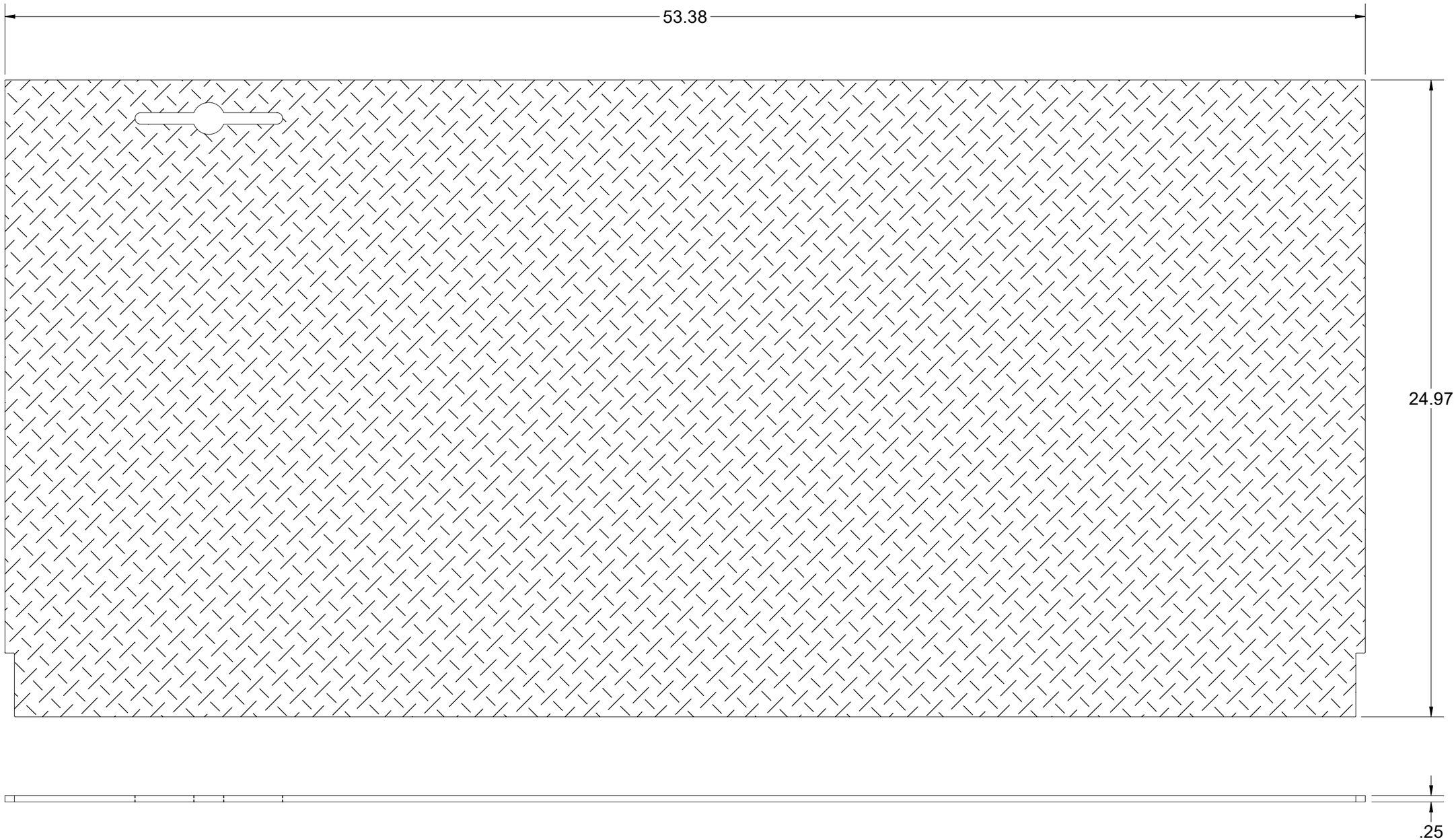

100004496.idw

BEND TABLE				MATERIAL IFS: 100007808
BEND RADIUS	V-OPENING	BEND ANGLE	BEND DEDUCTION	MATERIAL THK: 0.25
-	-	-	-	MAT DESCRIPTION: SHT ALUM ASTM 6061 DP RAW .25

Infrastructure
JENSEN
527 Dunn Circle, Sparks, NV 89431
775-352-2716 FAX: 755-358-8127
JENSENMETALTECH.COM

©2025 Jensen Infrastructure - All rights reserved.
All materials appearing as Jensen Infrastructure documents and the like are proprietary work product and are protected under U.S. copyright and other laws. Unless in conjunction with business conducted with Jensen Infrastructure , any use of Jensen Infrastructure work product without express, written consent is prohibited, and recipient is prohibited from distributing any and all work product to non-approved third parties under penalty of civil action.
This product shall only be produced in a Jensen Infrastructure facility.

NAME & DESCRIPTION:	200073948 Door Component Aluminum Plate, Bottom	REV: A-2-1
WEIGHT: 34.086 lbmass	DRAWN BY: K. Aguilar	SHEET: 11 OF 14
CREATED: 3/17/2023	MODIFIED: 6/20/2025	

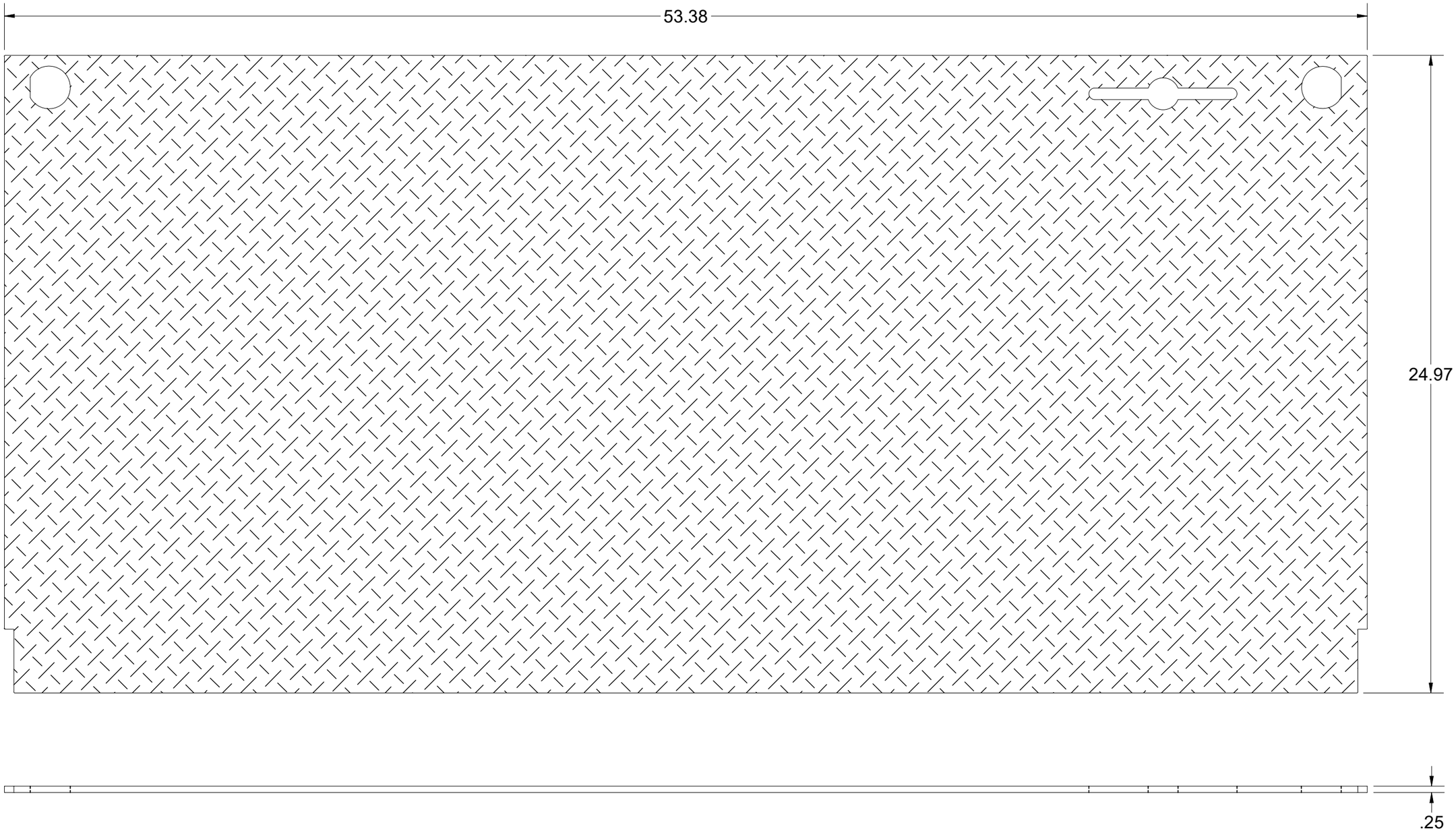

100004496.idw

BEND TABLE				MATERIAL IFS: 100007808
BEND RADIUS	V-OPENING	BEND ANGLE	BEND DEDUCTION	MATERIAL THK: 0.25
-	-	-	-	MAT DESCRIPTION: SHT ALUM ASTM 6061 DP RAW .25

Infrastructure
JENSEN
527 Dunn Circle, Sparks, NV 89431
775-352-2716 FAX: 755-358-8127
JENSENMETALTECH.COM

©2025 Jensen Infrastructure - All rights reserved.
All materials appearing as Jensen Infrastructure documents and the like are proprietary work product and are protected under U.S. copyright and other laws. Unless in conjunction with business conducted with Jensen Infrastructure , any use of Jensen Infrastructure work product without express, written consent is prohibited, and recipient is prohibited from distributing any and all work product to non-approved third parties under penalty of civil action.
This product shall only be produced in a Jensen Infrastructure facility.

NAME & DESCRIPTION:	200073950 Door Component Aluminum Plate, Top		REV: A-2-1
WEIGHT:	33.977 lbmass	DRAWN BY: K. Aguilar	SHEET: 12 OF 14
CREATED:	3/17/2023	MODIFIED: 6/20/2025	

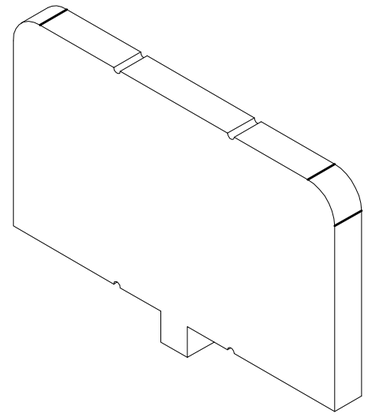

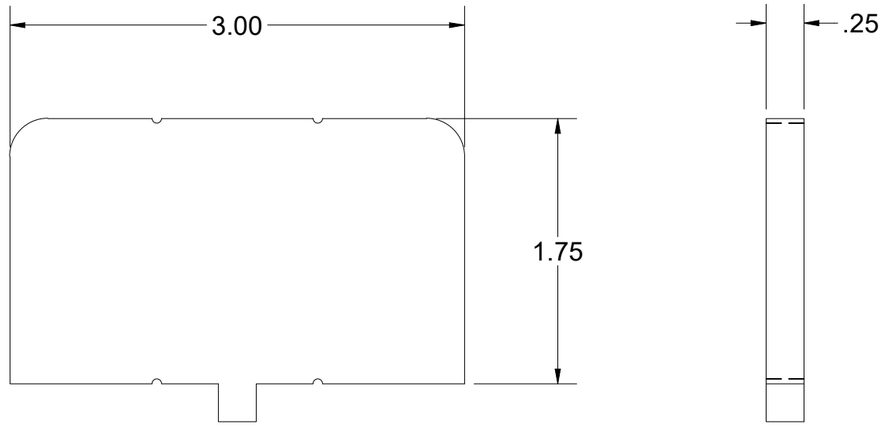

BEND TABLE			
BEND RADIUS	V-OPENING	BEND ANGLE	BEND DEDUCTION
-	-	-	-

MATERIAL IFS: 100007804

MATERIAL THK: 0.25

MAT DESCRIPTION: SHT ALUM ASTM 6061 SM-RAW 60W .25

Infrastructure JENSEN

527 Dunn Circle, Sparks, NV 89431
775-352-2716 FAX: 755-358-8127
JENSENMETALTECH.COM

©2025 Jensen Infrastructure - All rights reserved.
All materials appearing as Jensen Infrastructure documents and the like are proprietary work product and are protected under U.S. copyright and other laws. Unless in conjunction with business conducted with Jensen Infrastructure , any use of Jensen Infrastructure work product without express, written consent is prohibited, and recipient is prohibited from distributing any and all work product to non-approved third parties under penalty of civil action.
This product shall only be produced in a Jensen Infrastructure facility.

NAME & DESCRIPTION: 200079449 HANDLE RETAINER ALUMINUM

REV: A-2-1

WEIGHT: 0.129 lbmass

DRAWN BY: K. Aguilar

CREATED: 3/17/2023

MODIFIED: 6/20/2025

SHEET: 13 OF 14

100004496.idw

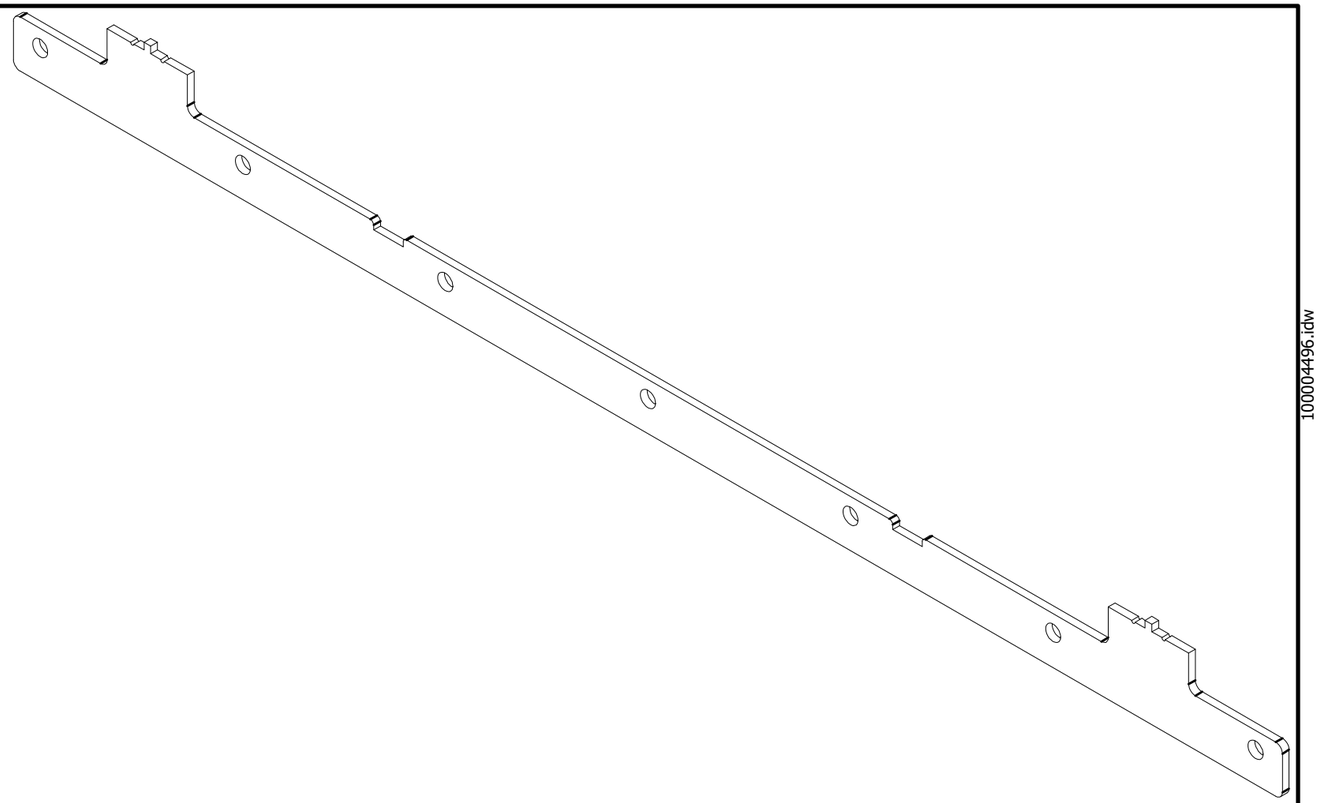

100004496.idw

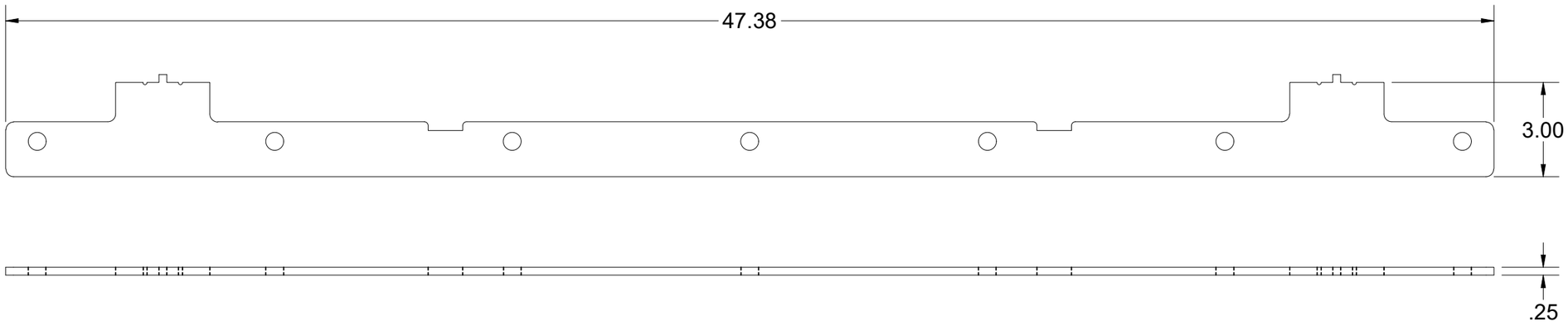

BEND TABLE				MATERIAL IFS: 100007804
BEND RADIUS	V-OPENING	BEND ANGLE	BEND DEDUCTION	MATERIAL THK: 0.25
-	-	-	-	MAT DESCRIPTION: SHT ALUM ASTM 6061 SM-RAW 60W .25

Infrastructure
JENSEN
527 Dunn Circle, Sparks, NV 89431
775-352-2716 FAX: 755-358-8127
JENSENMETALTECH.COM

©2025 Jensen Infrastructure - All rights reserved.
All materials appearing as Jensen Infrastructure documents and the like are proprietary work product and are protected under U.S. copyright and other laws. Unless in conjunction with business conducted with Jensen Infrastructure , any use of Jensen Infrastructure work product without express, written consent is prohibited, and recipient is prohibited from distributing any and all work product to non-approved third parties under penalty of civil action.
This product shall only be produced in a Jensen Infrastructure facility.

NAME & DESCRIPTION:	200091551 Door Component Aluminum Lap Bar 48in, 2.5" Stiffener Offset	REV: A-2-1
WEIGHT: 2.159 lbmass	DRAWN BY: K. Aguilar	SHEET: 14 OF 14
CREATED: 3/17/2023	MODIFIED: 6/20/2025	